SONY

DIGITAL BETACAM CAMCORDER

DVW-707/707P
DVW-709WS/709WSP
DVW-790WS/790WSP

SDI OUTPUT BOARD
BKDW-702

PICTURE CACHE BOARD
BKDW-703

IMAGE INVERTER BOARD
BKDW-704

Digital BETACAM™

Power HAD

MAINTENANCE MANUAL Part 2

Volume 2 1st Edition (Revised 1)

⚠警告

このマニュアルは，サービス専用です。
お客様が，このマニュアルに記載された設置や保守，点検，修理などを行うと感電や火災，人身事故につながることがあります。
危険をさけるため，サービストレーニングを受けた技術者のみご使用ください。

設置や保守，点検，修理などを行う前に，別冊のメンテナンスマニュアルPart 1の「安全のために」と別冊のオペレーションマニュアルの「安全のために」を必ずお読みください。

⚠WARNING

This manual is intended for qualified service personnel only.
To reduce the risk of electric shock, fire or injury, do not perform any servicing other than that contained in the operating instructions unless you are qualified to do so. Refer all servicing to qualified service personnel.

⚠WARNUNG

Die Anleitung ist nur für qualifiziertes Fachpersonal bestimmt.
Alle Wartungsarbeiten dürfen nur von qualifiziertem Fachpersonal ausgeführt werden. Um die Gefahr eines elektrischen Schlages, Feuergefahr und Verletzungen zu vermeiden, sind bei Wartungsarbeiten strikt die Angaben in der Anleitung zu befolgen. Andere als die angegeben Wartungsarbeiten dürfen nur von Personen ausgeführt werden, die eine spezielle Befähigung dazu besitzen.

⚠AVERTISSEMENT

Ce manual est destiné uniquement aux personnes compétentes en charge de l'entretien. Afin de réduire les risques de décharge électrique, d'incendie ou de blessure n'effectuer que les réparations indiquées dans le mode d'emploi à moins d'être qualifié pour en effectuer d'autres. Pour toute réparation faire appel à une personne compétente uniquement.

DVW-707 (SY)	Serial No. 10001 and Higher
DVW-707 (J)	Serial No. 30001 and Higher
DVW-707P (SY)	Serial No. 40001 and Higher
DVW-709WS (SY)	Serial No. 10001 and Higher
DVW-709WS (J)	Serial No. 30001 and Higher
DVW-709WSP (SY)	Serial No. 40001 and Higher
DVW-790WS (SY)	Serial No. 10001 and Higher
DVW-790WS (J)	Serial No. 30001 and Higher
DVW-790WSP (SY)	Serial No. 40001 and Higher

CAUTION

Danger of explosion if battery is incorrectly replaced.

Replace only with the same or equivalent type recommended by the manufacturer.
Dispose of used batteries according to the manufacturer's instructions.

Vorsicht!

Explosionsgefahr bei unsachgemäßem Austausch der Batterie.

Ersatz nur durch denselben oder einen vom Hersteller empfohlenen ähnlichen Typ.
Entsorgung gebrauchter Batterien nach Angaben des Herstellers.

ATTENTION

Il y a danger d'explosion s'il y a remplacement incorrect de la batterie.

Remplacer uniquement avec une batterie du même type ou d'un type équivalent recommandé par le constructeur.
Mettre au rebut les batteries usagées conformément aux instructions du fabricant.

ADVARSEL!

Lithiumbatteri-Eksplosionsfare ved fejlagtig håndtering.
Udskiftning må kun ske med batteri af samme fabrikat og type.
Levér det brugte batteri tilbage til leverandøren.

For the customers in the U.S.A. and Canada

RECYCLING NICKEL-CADMIUM BATTERIES

Nickel Cadmium batteries are recyclable. You can help preserve our environment by returning your unwanted batteries to your nearest point for collection, recycling or proper disposal.
Note: In some areas the disposal of nickel cadmium batteries in household or business trash may be prohibited.

RBRC (Rechargeable Battery Recycling Corporation) advises you about spent battery collection by the following phone number.

Call toll free number: 1-800-822-8837
(United States and Canada only)

Caution: Do not handle damaged or leaking nickel-cadmium batteries.

Voor de klanten in Nederland

Dit apparaat bevat een MnO_2-Li batterij voor memory back-up.

Raadpleeg uw leverancier over de verwijdering van de batterij op het moment dat u het apparaat bij einde levensduur afdankt.

Gooi de batterij niet weg, maar lever hem in als KCA.

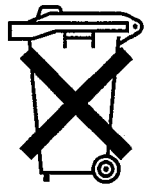

Bij dit produkt zijn batterijen geleverd. Wanneer deze leeg zijn, moet u ze niet weggooien maar inleveren als KCA.

目次

このマニュアルについて

本書の目的 ..... 5(J)
構成 ..... 5(J)
関連マニュアル ..... 6(J)

1. Spare Parts

1-1. 補修部品注意事項 1-1
1-2. Exploded Views 1-2
1-3. Hardware List 1-36
1-4. Electrical Parts List 1-37
1-5. Frame List 1-122
1-5-1. Harnesses/Flexible Card Wires List 1-122
1-5-2. External Connectors 1-124
1-6. Supplied Accessories 1-124
1-7. Optional Fixtures 1-125
1-8. BKDW-702 1-125
1-9. BKDW-703 1-128
1-10. BKDW-704 1-130

2. Semiconductor Pin Assignments

3. Block Diagrams

Block Diagram Index 3-1
Circuit Functions 3-2
CAMERA BLOCK Overall 3-3
CCD BLOCK(1/4) 3-4
CCD BLOCK(2/4) 3-5
CCD BLOCK(3/4) 3-6
CCD BLOCK(4/4) 3-7
CAMERA BLOCK 3-8
VTR BLOCK Overall(1/2) 3-10
VTR BLOCK Overall(2/2) 3-11
VTR BLOCK(1/4) 3-12
VTR BLOCK(2/4) 3-13
VTR BLOCK(3/4) 3-14
VTR BLOCK(4/4) 3-15

4. Schematic Diagrams

Schematic Diagram Index 4-1
BI-96(R)/ 96(G)/ 96(B) 4-3
PA-228 4-4
VA-191 4-6
TG-206/206P 4-10
TG-207/207P 4-13
DR-387 4-14
CN-1183 4-19
DCP-17 4-20
AD-155 4-36
BF-74 4-37
RC-69 4-38
RC-75 4-40
ES-23/23P 4-42
CI-21 4-46
CN-1573 4-47
DVP-17 4-49
DVP-14 4-62
SV-210 4-72
CTL-10 4-75
HN-260 4-76
TC-101 4-78
AXM-21/21B 4-90
CUE-2 4-91
MA-94 4-92
IF-716 4-93
CNB-11/11B 4-95
RE-160 4-98
RE-161 4-100
DC-101 4-102
DC-106 4-103
PS-533 4-105
MB-810 4-106
MB-811 4-108
CP-329 4-113
IO-178 4-114
SE-275 4-115
DIF-75 4-116
FM-65 4-120
MY-93 4-122
Frame 4-126

LP-109 4-126
SW-973 4-126
CI-20 4-127
LP-111 4-127
RM-180 4-127
VSE-32 4-127
SW-971 4-128
SW-983 4-128
HP-93 4-129
KY-293 4-129
SW-972 4-129
VR-248 4-129

5. Board Layouts

Board Layout Index 5-1
Circuit Functions 5-2
BI-96 5-3
PA-228 5-3
VA-191 5-4
TG-206/206P 5-5
TG-207/207P 5-6
DR-387 5-7
CN-1183 5-8
DCP-17 5-9
AD-155 5-12
BF-74 5-12
RC-69 5-13
RC-75 5-13
ES-23/23P 5-14
CI-20 5-16
CI-21 5-16
CN-1573 5-16
DVP-17 5-17
DVP-14 5-20
SV-210 5-22
CTL-10 5-23
HN-260 5-24
TC-101 5-25
AXM-21/21B 5-28
CUE-2 5-28
IF-716 5-29

MA-94 5-29
VR-248 5-29
CNB-11 5-30
DC-101 5-30
DC-106 5-30
PS-533 5-30
MB-810 5-31
MB-811 5-32
CP-329 5-34
HP-93 5-34
IO-178 5-34
KY-293 5-34
LP-109 5-34
LP-111 5-34
RM-180 5-35
SE-275 5-35
SW-971 5-36
SW-972 5-36
SW-973 5-36
SW-983 5-36
VSE-32 5-36
DIF-75 5-37
FM-65 5-38
MY-93 5-39

このマニュアルについて

本書の目的

本書は，下記機種のメンテナンスマニュアル Part 2 Volume 2 です。

デジタルベータカムカムコーダ	DVW-790WS/709WS/707
SDI アウトプットボード	BKDW-702
ピクチャーキャッシュボード	BKDW-703
イメージインバータボード	BKDW-704 (DVW-790WS/709WS 専用)

メンテナンスマニュアル Part 2 は，システム／サービスエンジニアの方々にご使用いただくことを想定し，部品レベルでのサービスを前提とした情報 (部品交換，調整要項，回路図，マウント図，詳細パーツリスト等) を記載しています。

本書 (volume 2) では，回路図，マウント図，詳細パーツリスト等を記載しています。

構成

メンテナンスマニュアル Part 2 (Volume 1, 2) の構成を把握していただくために，全章の概略を以下に説明します。

メンテナンスマニュアル
Part 2 Volume 2
(9-967-820-)

Section 1　Spare Parts
分解図および部品リストを記載しています。

Section 2　Semiconductor Pin Assignments
半導体標準図を記載しています。

Section 3　Block Diagrams
オーバーオール，各基板のブロック図を記載しています。

Section 4　Schematic Diagrams
フレーム図，回路図を記載しています。

Section 5　Board Layouts
基板のマウント図を記載しています。

メンテナンスマニュアル
Part 2 Volume 1
(9-967-818-)

第 1 章　サービスインフォメーション
治工具リスト，延長基板の使用方法，基板／部品交換時の注意事項等について説明しています。

第 2 章　メンテナンスモード
本機の設定メニュー (サービスモード) について説明しています。

第 3 章　部品の交換
基板，CCD ユニット，コネクタ／スイッチ等の交換方法について説明しています。

第 4 章　メカデッキ部品の交換
メカデッキ内部品の交換方法について説明しています。

第 5 章　テープ走行調整
第 4 章に記載した部品の交換後に行う，テープ走行系調整について説明しています。

第 6 章　VTR 系電気調整
第 3，4 章に記載した部品の交換後に行う，VTR系電気調整について説明しています。

第 7 章　カメラ系電気調整 (DVW-790WS/709WS 専用)
DVW-790WS/709WSの修理や基板交換後に必要なカメラ系電気調整について説明しています。

第 8 章　カメラ系電気調整 (DVW-707 専用)
DVW-707 の修理や基板交換後に必要なカメラ系電気調整について説明しています。

関連マニュアル

本機には，この「メンテナンスマニュアル Part 2」の他に，下記のマニュアルが用意されています。

- オペレーションマニュアル (本機に付属)
  本機を実際に運用および操作する際に必要なマニュアルです。

- メンテナンスマニュアル Part 1 (本機に付属)
  本機の保守に関する情報，初期サービスに関する情報，別売り基板 (BKDW-702/703/704) の取り付け方法等を記載したマニュアルです。

- BVF-V10，BVF-V20W メンテナンスマニュアル (別途用意)
  ビューファインダのサービスに関する情報を記載したマニュアルです。
  入手を希望される方は，ソニーの営業窓口にお問い合わせください。

Table of Contents

Manual Structure

Purpose of this manual ..... 5 (E)
Contents ..... 5 (E)
Related manuals ..... 6 (E)

1. Spare Parts

1-1. Notes on Repair Parts 1-1
1-2. Exploded Views 1-2
1-3. Hardware List 1-36
1-4. Electrical Parts List 1-37
1-5. Frame List 1-122
  1-5-1. Harnesses/Flexible Card Wires List 1-122
  1-5-2. External Connectors 1-124
1-6. Supplied Accessories 1-124
1-7. Optional Fixtures 1-125
1-8. BKDW-702 1-125
1-9. BKDW-703 1-128
1-10. BKDW-704 1-130

2. Semiconductor Pin Assignments

3. Block Diagrams

Block Diagram Index 3-1
Circuit Functions 3-2
CAMERA BLOCK Overall 3-3
CCD BLOCK (1/4) 3-4
CCD BLOCK (2/4) 3-5
CCD BLOCK (3/4) 3-6
CCD BLOCK (4/4) 3-7
CAMERA BLOCK 3-8
VTR BLOCK Overall (1/2) 3-10
VTR BLOCK Overall (2/2) 3-11
VTR BLOCK (1/4) 3-12
VTR BLOCK (2/4) 3-13
VTR BLOCK (3/4) 3-14
VTR BLOCK (4/4) 3-15

4. Schematic Diagrams

Schematic Diagram Index 4-1
BI-96(R)/ 96(G)/ 96(B) 4-3
PA-228 4-4
VA-191 4-6
TG-206/206P 4-10
TG-207/207P 4-13
DR-387 4-14
CN-1183 4-19
DCP-17 4-20
AD-155 4-36
BF-74 4-37
RC-69 4-38
RC-75 4-40
ES-23/23P 4-42
CI-21 4-46
CN-1573 4-47
DVP-17 4-49
DVP-14 4-62
SV-210 4-72
CTL-10 4-75
HN-260 4-76
TC-101 4-78
AXM-21/21B 4-90
CUE-2 4-91
MA-94 4-92
IF-716 4-93
CNB-11/11B 4-95
RE-160 4-98
RE-161 4-100
DC-101 4-102
DC-106 4-103
PS-533 4-105
MB-810 4-106
MB-811 4-108
CP-329 4-113
IO-178 4-114
SE-275 4-115
DIF-75 4-116
FM-65 4-120
MY-93 4-122
Frame 4-126

LP-109 4-126
SW-973 4-126
CI-20 4-127
LP-111 4-127
RM-180 4-127
VSE-32 4-127
SW-971 4-128
SW-983 4-128
HP-93 4-129
KY-293 4-129
SW-972 4-129
VR-248 4-129

5. Board Layouts

Board Layout Index 5-1
Circuit Functions 5-2
BI-96 5-3
PA-228 5-3
VA-191 5-4
TG-206/206P 5-5
TG-207/207P 5-6
DR-387 5-7
CN-1183 5-8
DCP-17 5-9
AD-155 5-12
BF-74 5-12
RC-69 5-13
RC-75 5-13
ES-23/23P 5-14
CI-20 5-16
CI-21 5-16
CN-1573 5-16
DVP-17 5-17
DVP-14 5-20
SV-210 5-22
CTL-10 5-23
HN-260 5-24
TC-101 5-25
AXM-21/21B 5-28
CUE-2 5-28
IF-716 5-29

MA-94 5-29
VR-248 5-29
CNB-11 5-30
DC-101 5-30
DC-106 5-30
PS-533 5-30
MB-810 5-31
MB-811 5-32
CP-329 5-34
HP-93 5-34
IO-178 5-34
KY-293 5-34
LP-109 5-34
LP-111 5-34
RM-180 5-35
SE-275 5-35
SW-971 5-36
SW-972 5-36
SW-973 5-36
SW-983 5-36
VSE-32 5-36
DIF-75 5-37
FM-65 5-38
MY-93 5-39

Manual Structure

Purpose of this manual

This manual is the Maintenance Manual Part 2 Volume 2 of the following models:

Digital Betacam Camcorder
DVW-790WS/709WS/707, DVW-790WSP/709WSP/707P

SDI Output Board	BKDW-702
Picture Cache Board	BKDW-703
Image Inverter Board	BKDW-704
	(For DVW-790WS/790WSP/709WS/709WSP only)

This Maintenance Manual Part 2 is intended for use by trained system and service engineers, and provides the information that promises the parts level service (parts replacement, guideline for adjustment, schematic diagrams, board layouts, detailed parts list).

This manual (volume 2) describes about spare parts and diagrams.

Contents

This Maintenance Manual Part 2 (Volume 1 and 2) is organized by the following sections:

Maintenance Manual Part 2 Volume 2 (9-967-820-)

Section 1 Spare Parts
Describes the exploded views and detailed parts list.

Section 2 Semiconductor Pin Assignments
Describes the semiconductor pin assignments.

Section 3 Block Diagrams
Describes the block diagrams of overall and each board.

Section 4 Schematic Diagrams
Describes the frame wiring and schematic diagrams for the unit.

Section 5 Board Layouts
Describes the board layouts for the unit.

Maintenance Manual Part 2 Volume 1 (9-967-819-)

Section 1 Service Overview
Explains the fixtures, using the extension boards, and precautions for board/part replacement.

Section 2 Maintenance Mode
Explains the setup menu (service mode) of this unit.

Section 3 Parts Replacement
Explains the replacement of the boards, CCD unit, and external connectors/switches.

Section 4 Mechanical Deck Parts Replacement

Explains the replacement of the parts of the mechanical deck.

Section 5 Tape Path Alignment

Explains the tape path alignment after replacement of parts that are described in Section 4.

Section 6 VTR System Electrical Alignment

Explains the electrical alignment for VTR system associated with replacement of parts that are described in Section 3 and 4.

Section 7 Camera System Electrical Alignment (DVW-790WS/ 790WSP/709WS/709WSP)

Explains the electrical alignment for Camera system that is required after the DVW-790WS/790WSP/709WS/709WSP repair is repaird or its board is replaced.

Section 8 Camera System Electrical Alignment (DVW-707/707P)

Explains the electrical alignment for Camera system that is required after the DVW-707/707P repair is repaired or its board is replaced.

Related manuals

Besides this "Maintenance Manual Part 2", the following manuals are available for this unit:

- **Operation Manual (Supplied with this unit)**
  This manual is necessary for application and operation of this unit.

- **Maintenance Manual Part 1 (Supplied with this unit)**
  This manual provides the information that is required to the primary services, maintenance of this unit and installation of the optional boards (BKDW-702/703/704).

- **BVF-V10/V10CE or BVF-V20W/V20WCE Maintenance Manual (available on request)**
  These manuals are describes the service information of the supplied viewfinder. If it is required, contact your local Sony Sales Office/Service Center.

Section 1
Spare Parts

1-1. 補修部品注意事項

1. 安全重要部品

⚠警告

⚠印のついた部品は安全性を維持するために重要な部品です。したがって，交換する時は必ず指定の部品を使ってください。

2. 部品の共通化

ソニーから供給する補修用部品は，セットに使われているものと異なることがあります。
これは部品の共通化，改良等によるものです。
部品表には現時点での共通化された補修用部品が記載されています。

3. 部品の在庫

部品表のSP (Supply code) 欄に “o” で示される部品は在庫していないことがあり，納期が長くなることがあります。

4. 単位の表記

下記の単位については，表記を変更または省略しています。

	単位	表記
静電容量	μF	uF
インダクタンス	μH	uH
抵抗値	Ω	省略
温度	°C	XXX-DEG-C

5. 仕向区分の表記

部品表中，下記表示のある部品は，その仕向で使用している部品です。
For J： 日本向けモデルに使用
For SY： 日本向け以外モデルに使用

Section 1
Spare Parts

1-1. Notes on Repair Parts

1. Safety Related Components Warning

WARNING

Components marked ⚠ are critical to safe operation. Therefore, specified parts should be used in the case of replacement.

2. Standardization of Parts

Some repair parts supplied by Sony differ from those used for the unit. These are because of parts commonality and improvement.
Parts list has the present standardized repair parts.

3. Stock of Parts

Parts marked with "o" at SP (Supply Code) column of the spare parts list may not be stocked. Therefore, the delivery date will be delayed.

4. Units Representation

The following represented units are changed or omitted in writing.

	Units	Representation
Capacitance	μF	uF
Inductance	μH	uH
Resistance	Ω	Abbreviation
Temperature	°C	XXX-DEG-C

5. Destination Representation

The part indicated "For J/SY" in the spare parts list is used in the unit written below.
For J : The part is used in a unit for Japan.
For SY : The part is used in a unit for regions except Japan.

1-2. Exploded Views

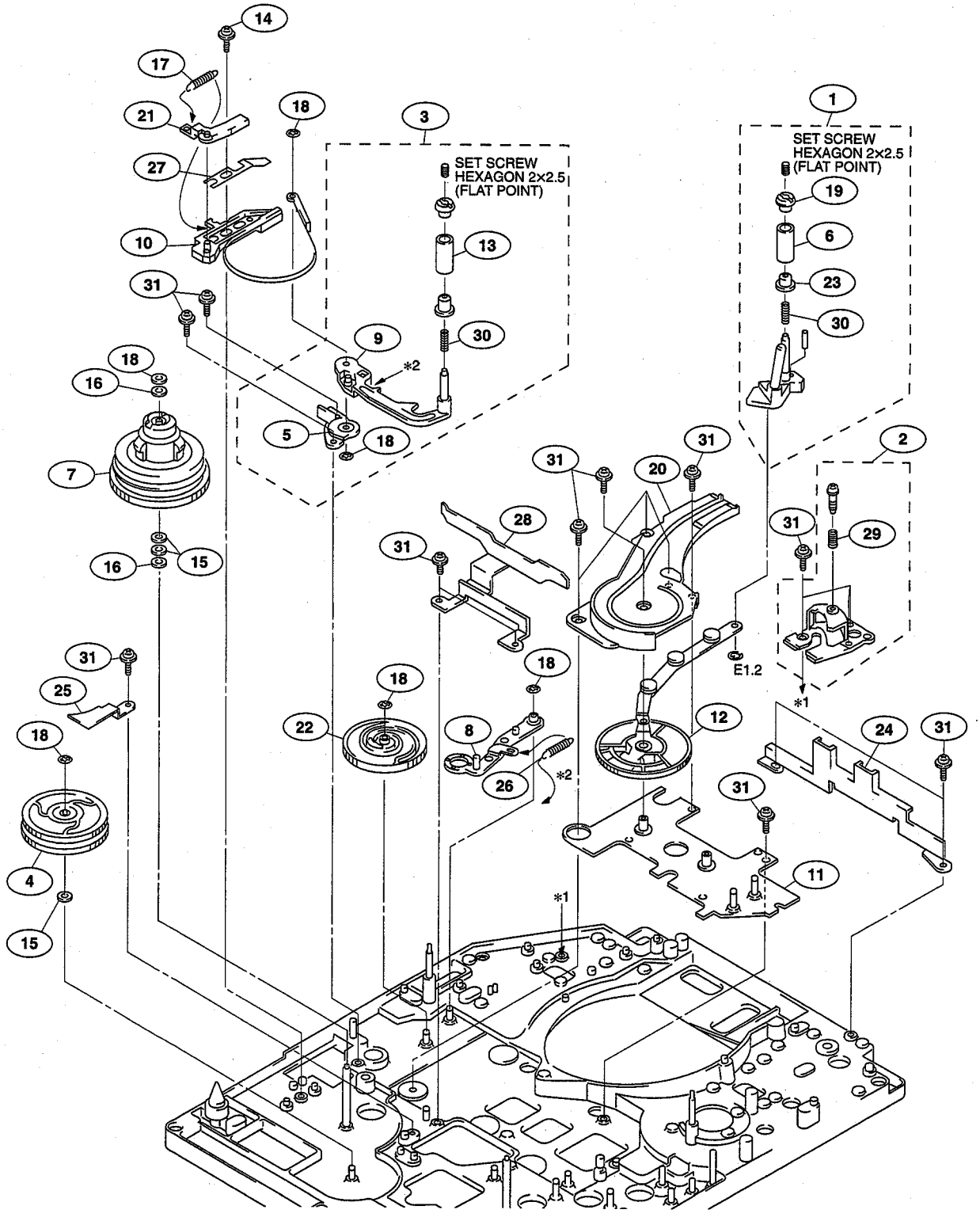

No.	Part No.	SP	Description
1	A-8278-030-K	s	SLIDER ASSY, S
2	A-8278-032-D	o	CATCHER S ASSY
3	A-8278-036-H	s	TENSION REGURATOR ASSY
4	A-8278-249-D	s	IDLER ASSY, S
5	X-3678-090-1	o	HOLDER, BEARING ASSY
6	X-3678-091-3	s	ROLLER ASSY
7	X-3678-098-7	s	TABLE ASSY, S REEL
8	X-3678-109-2	o	ARM ASSY, DRAWER
9	X-3678-111-3	o	ARM ASSY, TENSION REGURATOR
10	X-3678-114-2	s	BAND ASSY, TENSION REGULATOR
11	X-3678-119-2	o	BASE ASSY, GEAR,THREADING
12	X-3678-123-6	o	GEAR ASSY, THREADING S
13	X-3678-156-2	s	ROLLER T ASSY
14	2-640-315-01	o	SCREW (M 2X5), SMALL, +P, SW
15	3-303-961-01	s	WASHER, POLY
16	3-303-961-11	s	WASHER, POLY
17	3-491-360-00	s	SPRING, TENSION
18	3-559-408-11	s	WASHER, POLYETHYLENE, DIA.1.2
19	3-679-729-02	s	FLANGE, UPPER
20	3-679-739-03	o	RAIL, S
21	3-679-765-01	s	BRAKE, S SOFT
22	3-679-777-04	o	GEAR, ARM, DRAWER
23	3-680-230-01	s	FLANGE, UNDER
24	3-680-240-03	o	HOLDER HN
25	3-680-267-01	o	BLACKET BAND
26	3-682-246-02	s	SPRING, EXTENSION
27	3-682-247-01	o	RETAINER, BASE
28	3-697-128-02	o	GUIDE PROTECTOR ,CASSETTE
29	3-716-167-01	s	SPRING, COMPRESSION
30	3-729-011-01	s	SPRING, COMPRESSION
31	3-729-013-21	s	SCREW (M1.4X2.5), WASHERHEAD (+P)

T Side Reel Chassis

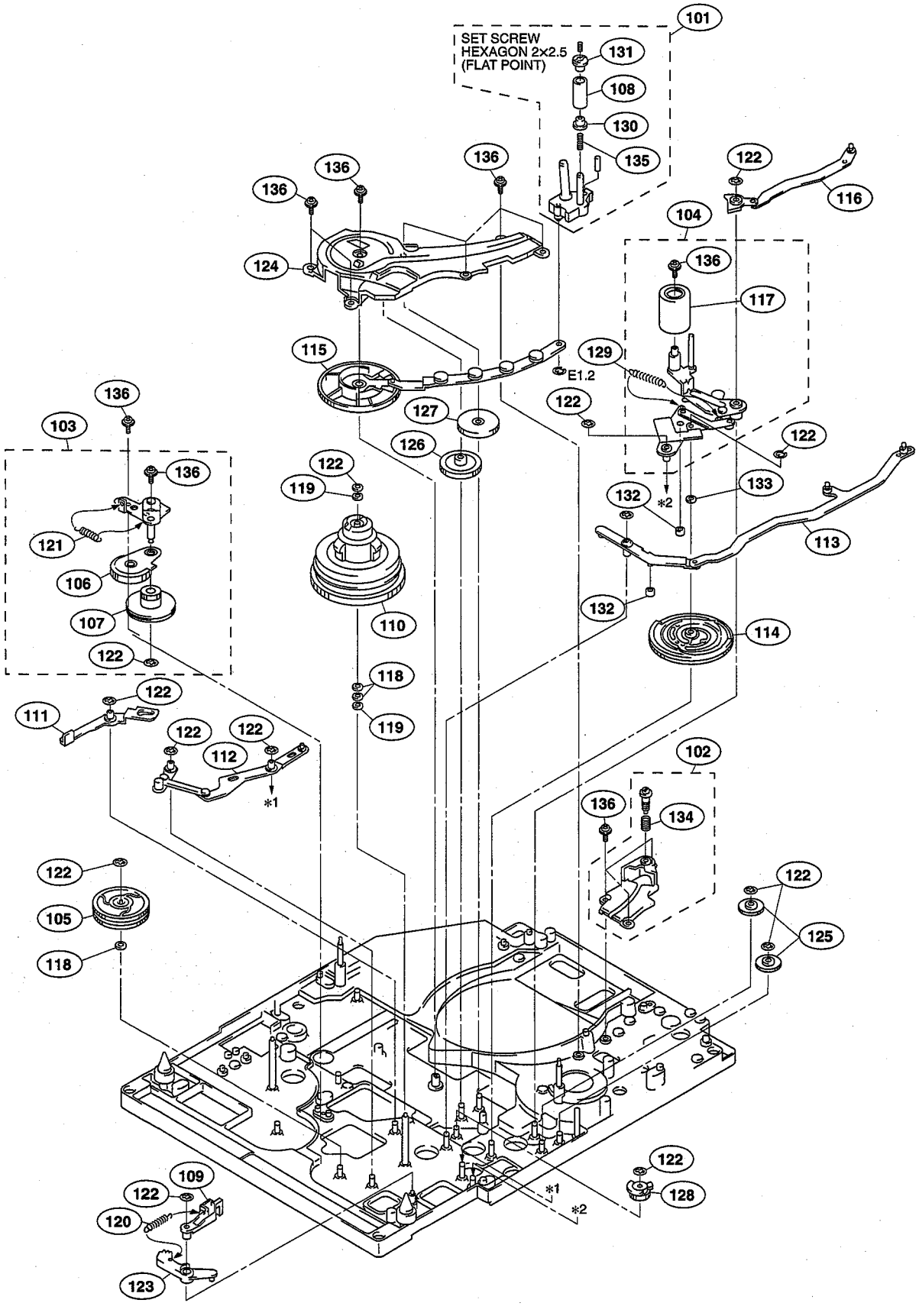

No.	Part No.	SP	Description
101	A-8278-031-J	s	SLIDER ASSY, T
102	A-8278-033-D	o	CATCHER T ASSY
103	A-8278-034-F	o	GEAR ASSY
104	A-8278-048-F	s	PINCH ASSY
105	A-8278-352-A	s	IDLER ASSY, T
106	X-3678-065-2	s	GEAR ASSY
107	X-3678-066-1	s	PULLEY ASSY, RELAY
108	X-3678-091-3	s	ROLLER ASSY
109	X-3678-096-4	s	BRAKE ASSY, T SOFT
110	X-3678-097-7	s	TABLE ASSY, T REEL
111	X-3678-099-2	o	LEVER ASSY, RELEASE
112	X-3678-108-2	o	LEVER ASSY, RELEASE,BRAKE
113	X-3678-110-4	o	LINK ASSY, CUE
114	X-3678-113-3	o	GEAR ASSY, CAM
115	X-3678-122-9	o	GEAR ASSY, THREADING T
116	X-3678-136-2	s	LINK ASSY STOPPER
117	X-3678-926-1	s	PINCH ROLLER ASSY
118	3-303-961-01	s	WASHER, POLY 2MM DIA.0.13T
119	3-303-961-11	s	WASHER, POLY 2MM DIA.0.25T
120	3-424-031-00	s	SPRING, RECORD SLIDER
121	3-542-649-00	s	SPRING, TENSION
122	3-559-408-11	s	WASHER, POLYETHYLENE, DIA.1.2
123	3-679-719-01	s	BRAKE, MAIN
124	3-679-740-04	o	RAIL, T
125	3-679-763-01	o	GEAR, MIDWAY
126	3-679-764-01	o	GEAR, MIDWAY,ST DRIVING
127	3-679-779-04	o	GEAR, ST DRIVING
128	3-679-780-01	o	GEAR, INTERMITTENT
129	3-680-286-02	s	SPRING, EXTENSION
130	3-682-273-01	s	FLANGE, UNDER, T2
131	3-682-274-01	s	FLANGE, UPPER, T2
132	3-683-340-01	o	ROLLER A
133	3-701-437-11	s	WASHER
134	3-716-167-01	s	SPRING, COMPRESSION
135	3-729-011-01	s	SPRING, COMPRESSION
136	3-729-013-21	s	SCREW (M1.4X2.5), WASHERHEAD (+P)

Drum

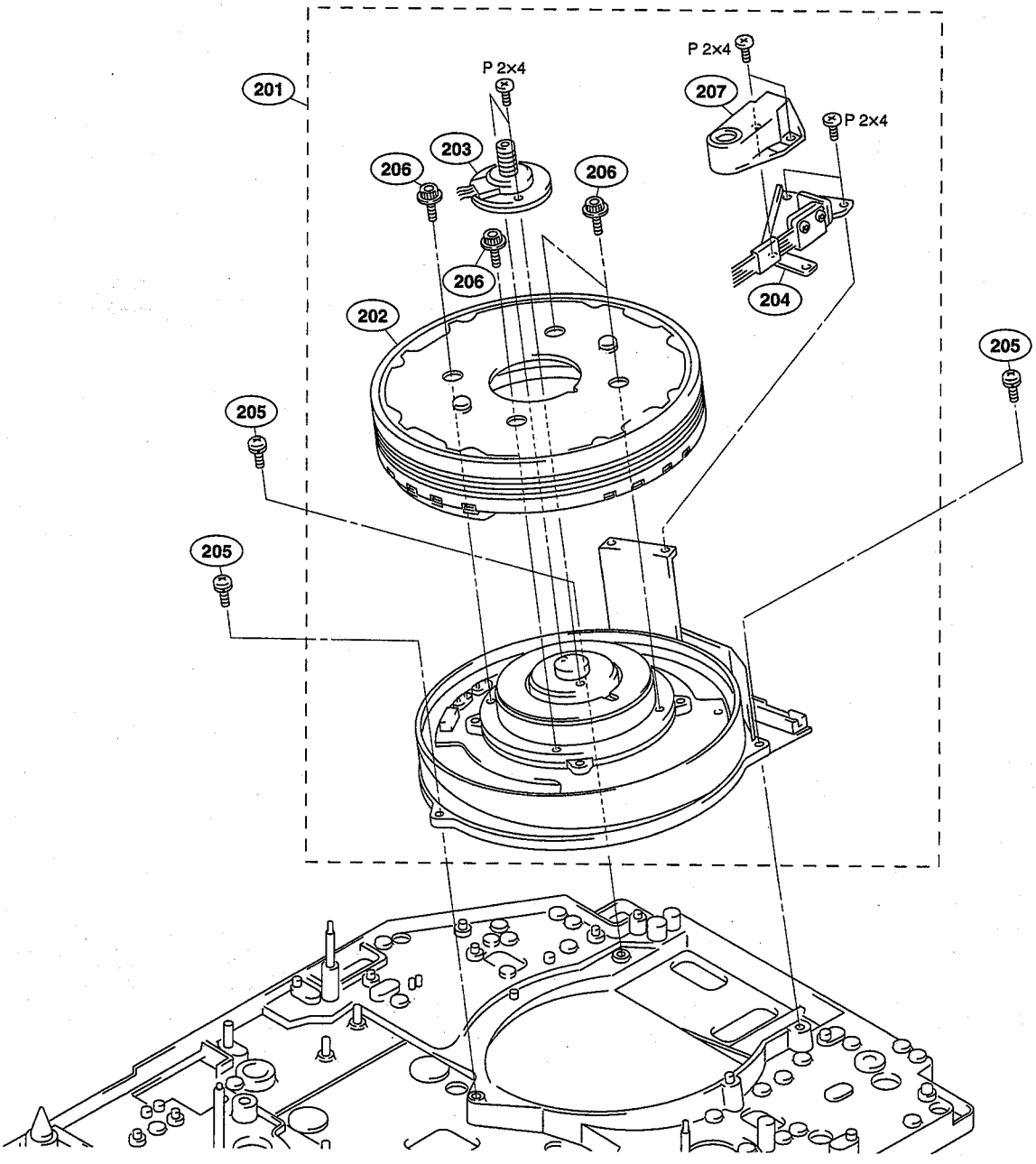

No.	Part No.	SP	Description
201	A-8263-628-A	s	DRUM ASSY, DJH-09A-R (for NTSC)
	A-8263-623-A	s	DRUM ASSY, DJH-10A-R (for PAL)
202	A-8263-641-A	s	UPPER DRUM ASSY, DJR-09-R (for NTSC)
	A-8263-624-A	s	UPPER DRUM ASSY, DJR-10-R (for PAL)
203	A-8263-855-A	s	RING ASSY, (RP) SLIP
204	A-8263-856-A	s	BRUSH ASSY (RP)
205	2-640-315-01	o	SCREW (M2X5), SMALL, +P, SW
206	3-185-531-01	s	BOLT M2X8, W HEXAGON
207	3-185-532-01	o	COVER, BRUSH

CTL and Erase Heads

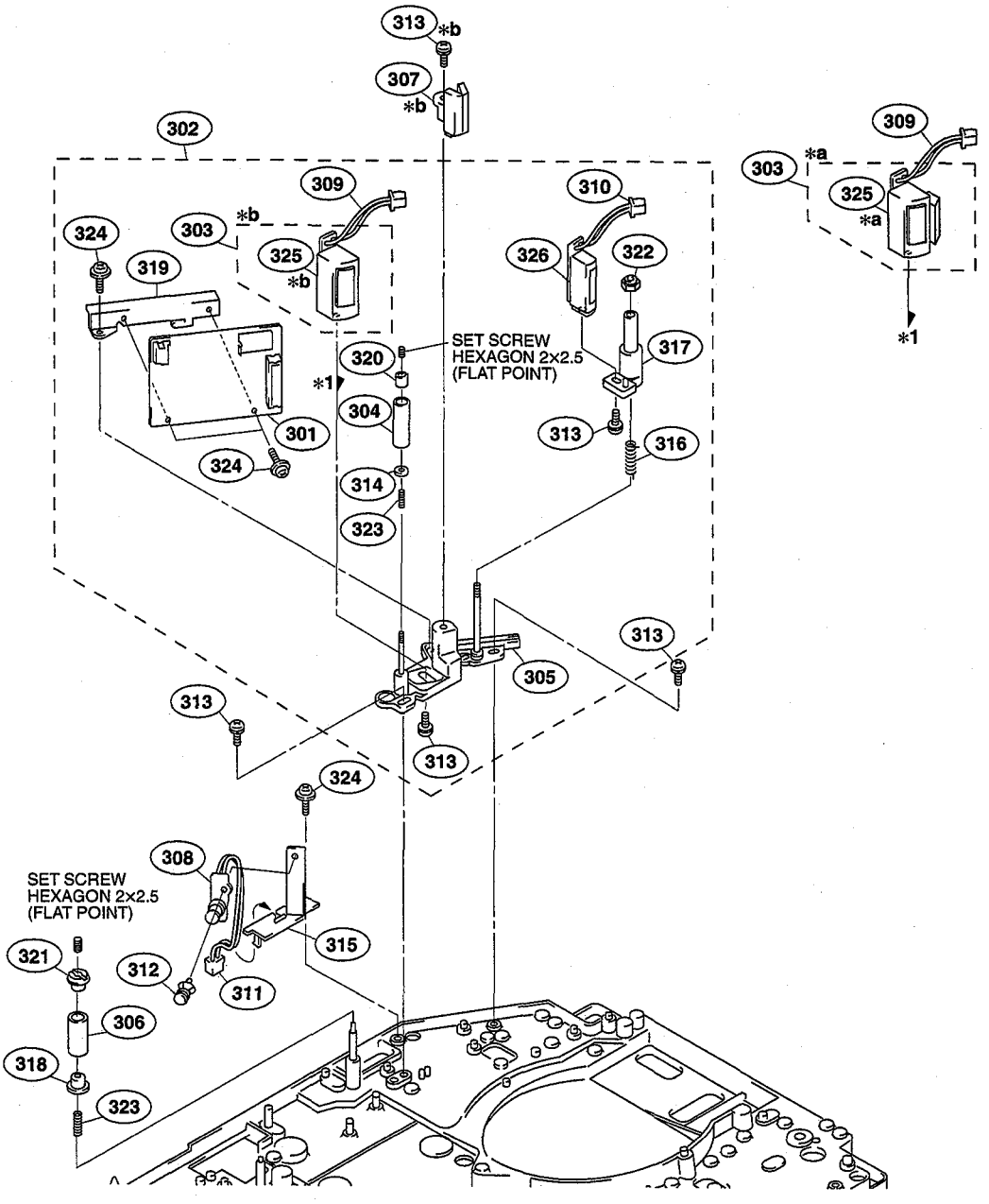

No.	Part No.	SP	Description

Note
*a: Serial No.10056 and higher (DVW-707:SY)
Serial No.30011 and higher (DVW-707/709WS/790WS:J)
Serial No.10126 and higher (DVW-709WS:SY)
Serial No.10161 and higher (DVW-790WS:SY)
Serial No.40191 and higher (DVW-707P)
Serial No.40256 and higher (DVW-709WSP)
Serial No.40511 and higher (DVW-790WSP)
*b: Serial No.10001 through 10055 (DVW-707:SY)
Serial No.30001 through 30010 (DVW-707/709WS/790WS:J)
Serial No.10001 through 10125 (DVW-709WS:SY)
Serial No.10001 through 10160 (DVW-790WS:SY)
Serial No.40001 through 40190 (DVW-707P)
Serial No.40001 through 40255 (DVW-709WSP)
Serial No.40016 through 40510 (DVW-790WSP)

301		A-8263-156-A	o	MOUNTED CIRCUIT BOARD, CTL-10
302		A-8263-200-J	o	HEAD ASSY, ENTRANCE
303	*a	X-3605-885-1	s	HEAD ASSY (FE-291-21A)
	*b	A-8321-048-A	s	HEAD ASSY, ERASE
304		X-3678-068-2	s	ROLLER ASSY, RESIN
305		X-3678-118-2	o	BASE ASSY, CTL FE
306		X-3678-129-2	s	ROLLER (2) ASSY, RESIN
307	*b	X-3678-142-1	o	CLEANER ASSY, TAPE
308		1-543-316-21	s	HEAD, SENSING (SMALL TYPE)
309		1-953-411-11	o	HARNESS, SUB (FE-HEAD)
310		1-953-412-11	o	HARNESS, SUB (CTL-HEAD)
311		1-953-414-11	o	HARNESS, SUB (END-SE3)
312		2-279-715-11	s	RIVET, NYLON
313	*b	2-640-315-01	o	SCREW (M2X5), SMALL, +P, SW
314		3-557-565-00	s	WASHER, 1.4 DAI, SMALL
315		3-679-790-02	o	HOLDER, END SENSOR
316		3-680-043-02	s	SPRING, CTL
317		3-680-044-02	o	BRACKET, CTL
318		3-680-230-01	s	FLANGE, UNDER
319		3-680-231-02	o	HOLDER, PB
320		3-681-768-01	o	NUT, S3
321		3-683-026-01	s	FLANGE, UPPER
322		3-698-829-01	s	NUT (M2)
323		3-729-011-01	s	SPRING, COMPRESSION
324		3-729-013-21	s	SCREW (M1.4X2.5), WASHERHEAD (+P)
325	*b	8-825-772-63	s	HEAD, ERASE EF291-21A
326		8-825-779-72	s	CTL HEAD, PS244-21D

AU Head

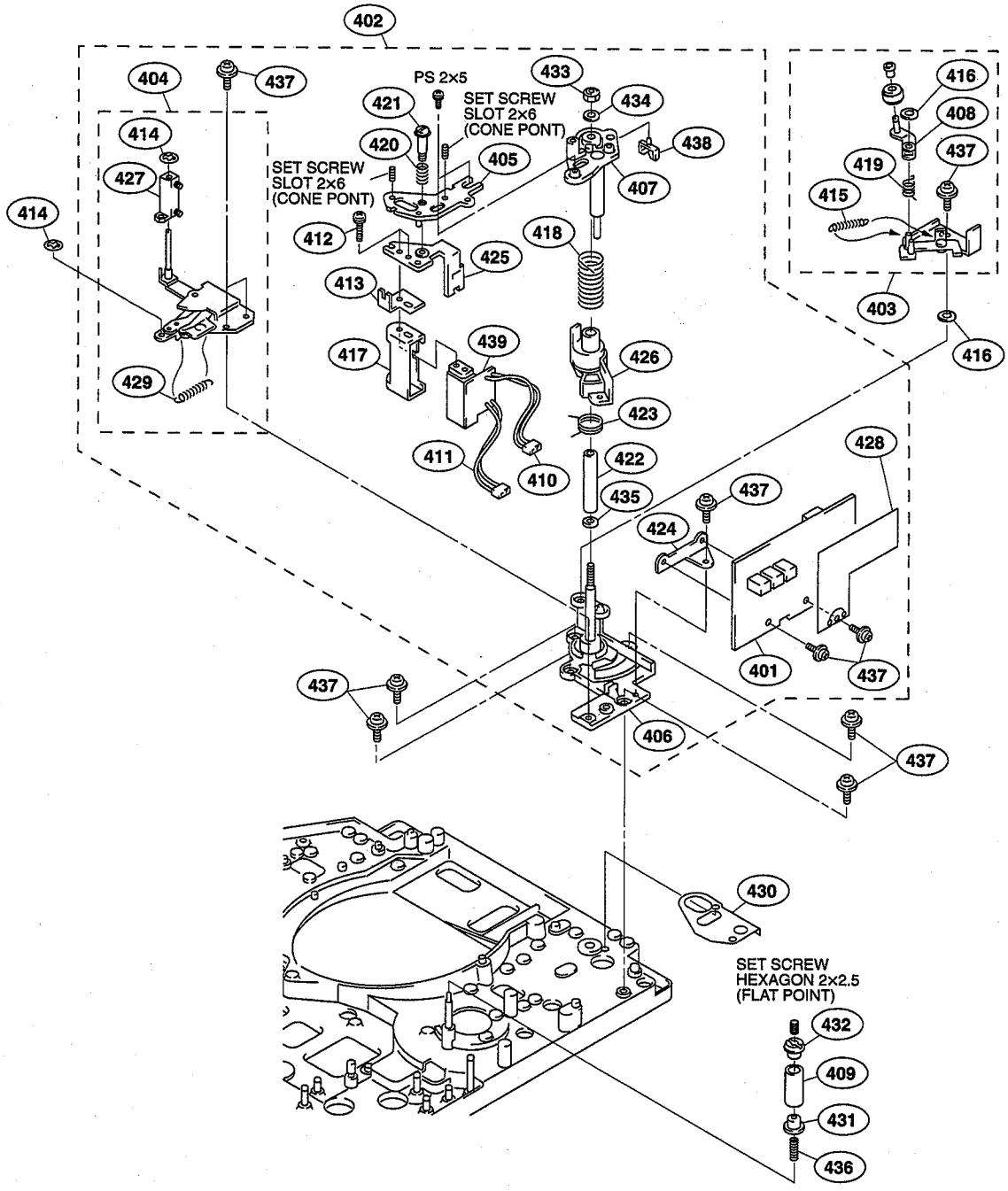
402
404
437
PS 2x5
433
421
SET SCREW
SLOT 2x6
(CONE PONT)
434
414
420
438
405
427
SET SCREW
SLOT 2x6
(CONE PONT)
407
414
412
418
425
413
439
417
426
429
423
411
410
422
435
428
437
424
401
437
437
406
437
430
SET SCREW
HEXAGON 2x2.5
(FLAT POINT)
432
409
431
436
416
408
437
419
415
403
416

No.	Part No.	SP	Description
401	A-8263-157-A	o	MOUNTED CIRCUIT BOARD, CUE-2
402	A-8263-201-B	o	HEAD ASSY, CUE
403	A-8278-044-J	s	CLEANER ASSY, VH
404	A-8278-052-E	o	CLEANER ASSY, CUE
405	X-3678-094-1	o	PLATE ASSY, CUE HEAD
406	X-3678-095-2	o	PLATE ASSY, BASE CUE/TC
407	X-3678-112-1	o	PLATE ASSY, CUE/TC ADJUSTMENT
408	X-3678-116-3	o	ARM ASSY, CL
409	X-3678-156-2	s	ROLLER T ASSY
410	1-953-413-11	o	HARNESS, SUB (CUE HEAD-CUE2)
411	1-953-417-11	o	HARNESS, SUB (TC HEAD-HN12)
412	2-640-315-01	o	SCREW (M2X5), SMALL, +P, SW
413	3-171-570-01	o	PLATE (R), ADJUSTMENT
414	3-321-393-01	s	WASHER, STOPPER
415	3-337-020-01	s	SPRING, TENSION
416	3-559-408-11	s	WASHER, POLYETHYLENE, DIA.1.2
417	3-679-788-01	o	CASE, SHIELD
418	3-680-005-01	o	SPRING, CUE/TC
419	3-680-009-02	o	SPRING, TORSION
420	3-680-222-01	s	SPRING, COMPRESSION
421	3-680-223-01	s	SHAFT
422	3-680-225-01	o	SLEEVE, SHAFT,MAIN,CUE/TC
423	3-680-233-01	o	SPRING, RTN
424	3-680-234-01	o	HOLDER, PB
425	3-680-259-01	o	BRACKET, CUE/TC
426	3-680-262-02	o	PLATE, SWING, CUE/TC
427	3-681-778-02	s	BRUSH, CUE
428	3-682-275-02	o	SEET, INSULATING
429	3-682-787-01	s	SPRING, EXTENSION
430	3-683-342-01	o	PROTECTOR
431	3-686-173-01	s	FLANGE,UNDER (T3)
432	3-686-174-01	s	FULANGE,UPPER (T3)
433	3-698-829-01	s	NUT (M2)
434	3-701-437-11	s	WASHER, POLY 2MM DIA.0.25T
435	3-701-439-11	s	WASHER, POLY 3MM DIA.0.25T
436	3-729-011-01	s	SPRING, COMPRESSION
437	3-729-013-21	s	SCREW (M1.4X2.5), WASHERHEAD (+P)
438	3-906-254-01	o	CLAMP
439	8-825-779-61	s	HEAD, AU PS244-2103L

Gear and Manual Eject

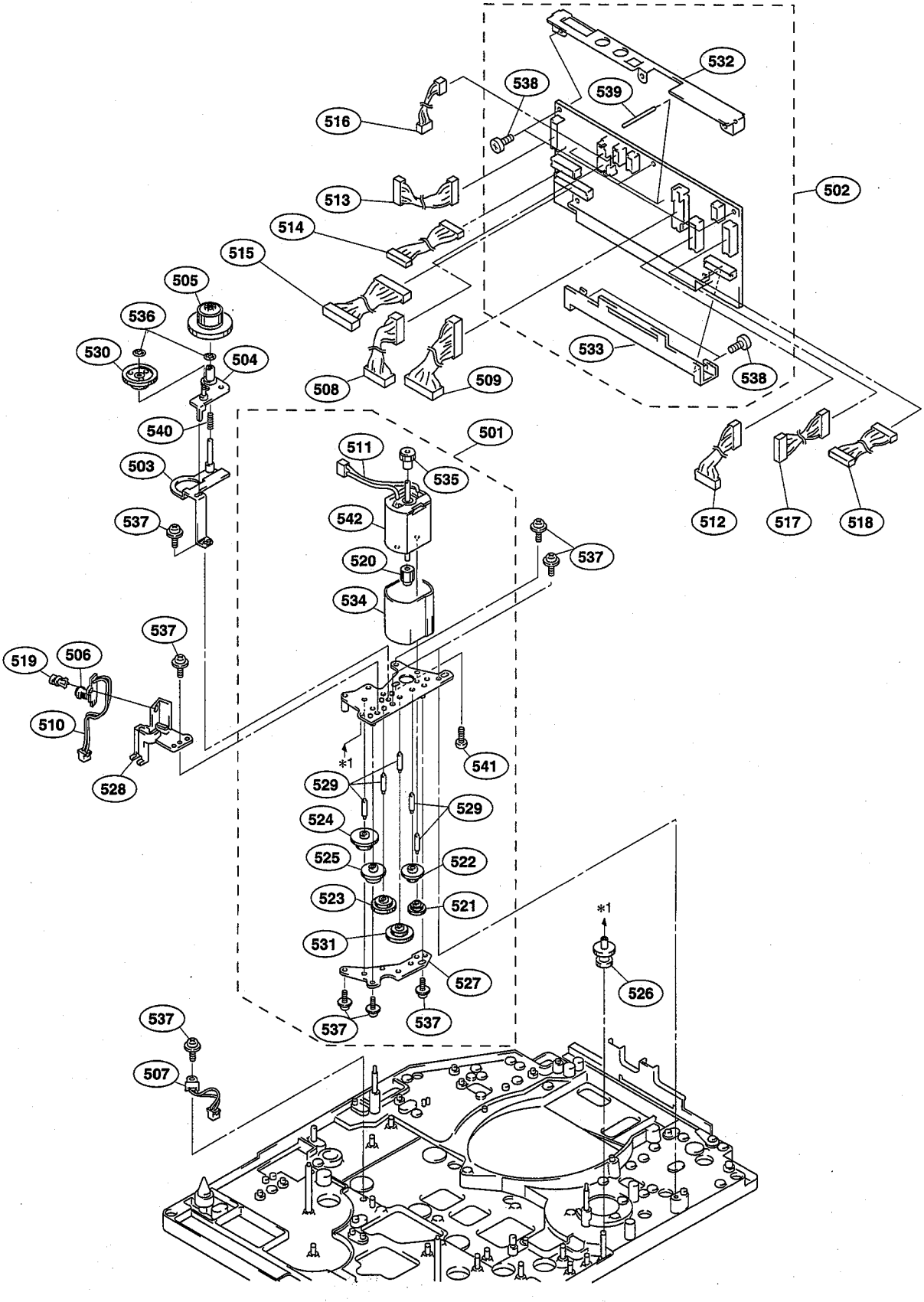

No.	Part No.	SP	Description
501	A-8278-035-D	s	GEAR BLOCK ASSY
502	A-8321-453-A	o	MOUNTED CIRCUIT BOARD, HN-260
503	X-3678-115-3	o	BASE ASSY, MANUAL EJECT
504	X-3678-120-1	o	BASE ASSY, GEAR, IDOL
505	X-3678-130-2	o	GEAR, MANUAL, DRIVING
506	1-543-316-21	s	HEAD, SENSING (SMALL TYPE)
507	1-810-599-11	s	SENSOR, DEW CONDENSATION
508	1-953-408-12	o	HARNESS, SUB (DR2-HN1)
509	1-953-409-13	o	HARNESS, SUB (DR1-HN2)
510	1-953-415-11	o	HARNESS, SUB (TOP-SE4)
511	1-953-416-11	o	HARNESS, SUB (TM-CUE3)
512	1-953-420-12	o	HARNESS, SUB (DR3-HN10)
513	1-953-423-11	o	HARNESS, SUB (CTL1-HN4)
514	1-953-424-11	o	HARNESS, SUB (SE2-HN5)
515	1-953-425-11	o	HARNESS, SUB (SE1-HN6)
516	1-953-426-11	o	HARNESS, SUB (SR1-HN8)
517	1-953-427-11	o	HARNESS, SUB (CUE1-HN11)
518	1-953-435-11	o	HARNESS, SUB (CAP-HN14)
519	2-279-715-11	s	RIVET, NYLON
520	3-679-748-01	s	PINION
521	3-679-749-01	o	GEAR (A)
522	3-679-750-01	o	GEAR (B)
523	3-679-751-01	o	GEAR (D)
524	3-679-752-01	o	GEAR (E)
525	3-679-753-01	o	GEAR (F)
526	3-679-762-01	o	GEAR, JOINT
527	3-679-796-01	o	PLATE (A), BLOCK,GEAR
528	3-679-797-02	o	HOLDER, TOP SENSOR
529	3-679-799-01	o	SHAFT, GEAR
530	3-680-059-02	o	GEAR, IDOL
531	3-680-263-01	o	GEAR (C)
532	3-680-270-01	o	PLATE (HN-189), ORNAMENTAL
533	3-680-489-02	o	BRACKET, HN
534	3-680-914-01	o	CASE, SHIELD
535	3-680-988-01	s	PINION B
536	3-726-829-01	s	WASHER, STOPPER
537	3-729-013-21	s	SCREW (M1.4X2.5), WASHERHEAD (+P)
538	3-729-061-01	s	SCREW (M2) (TYPE 1)
539	4-352-844-01	o	PIN, LEAD, COATING
540	4-945-386-01	s	SPRING, COMPRESSION
541	7-627-552-28	s	SCREW, PRECISION +P1.7X2
542	8-835-440-01	s	MOTOR DN20-Q7Z1B

Belt and Capstan Motor

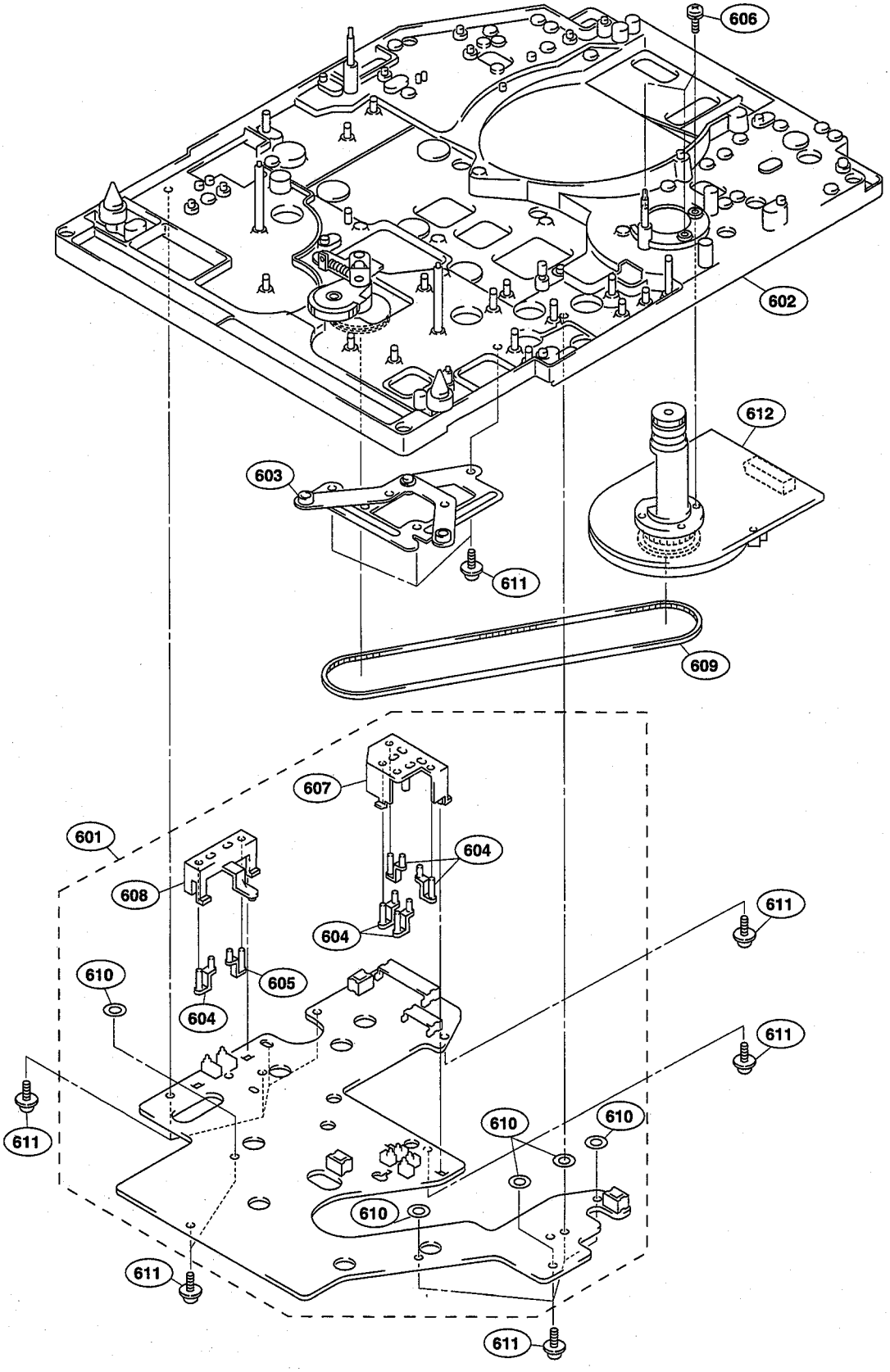

No.	Part No.	SP	Description
601	A-8310-898-B	o	MOUNTED CIRCUIT BOARD, SE-275
602	X-3605-880-1	o	CHASSIS ASSY, MECHA
603	X-3678-117-1	o	ARM ASSY, JOINT
604	X-3678-171-1	o	PIN ASSY, DETECTION
605	X-3679-461-1	o	PIN ASSY (REC), DETECTION
606	2-640-315-01	o	SCREW (M2X5), SMALL, +P, SW
607	3-679-714-02	o	HOLDER, SENSOR(A)
608	3-679-715-01	o	HOLDER, SENSOR(B)
609	3-679-723-01	s	BELT, TIMING
610	3-687-087-01	o	WASHER
611	3-729-013-21	s	SCREW (M1.4X2.5), WASHERHEAD (+P)
612	8-835-534-01	s	MOTOR, DC SCV-0702A/J-N

Cassette Compartment

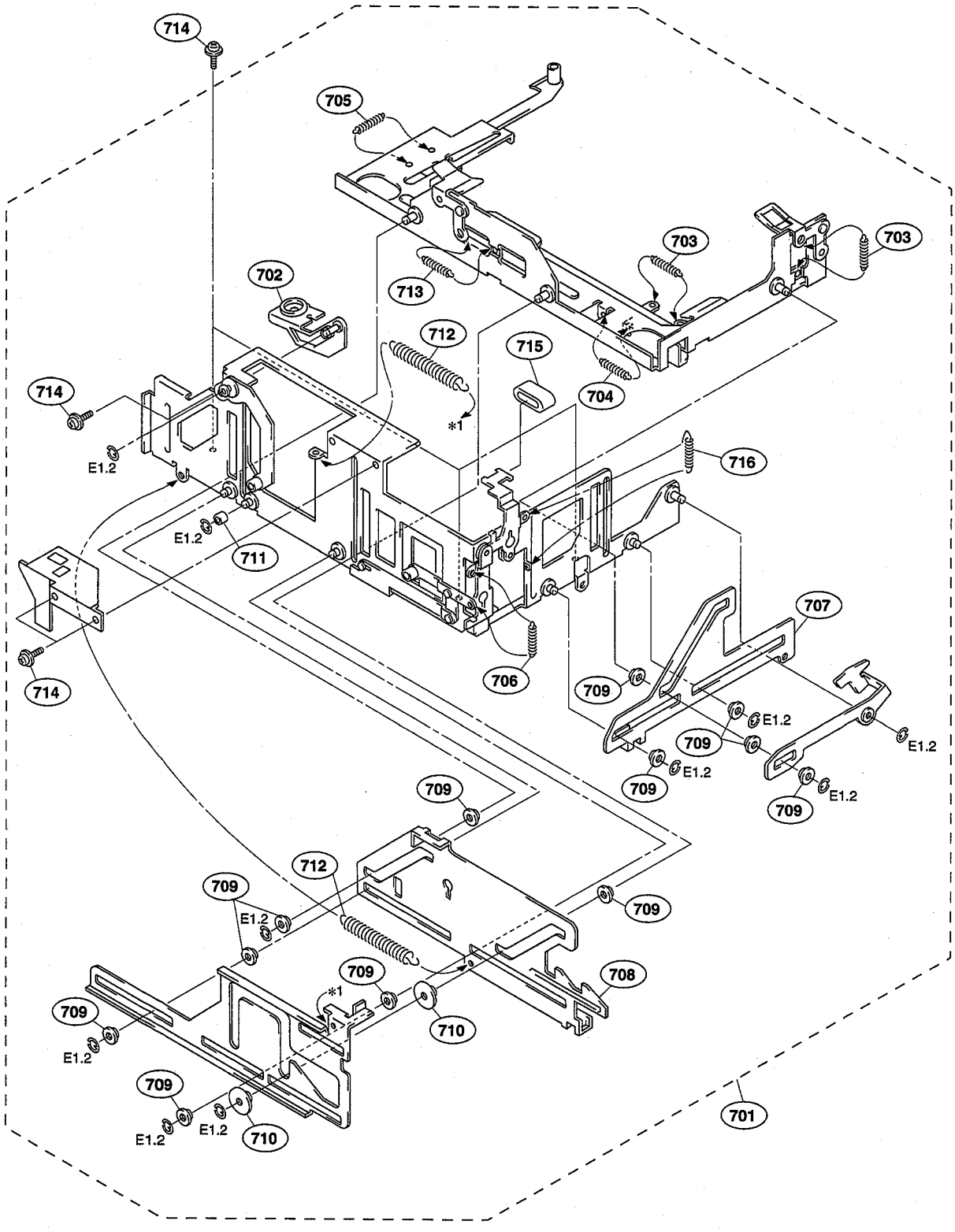

No.	Part No.	SP	Description
701	A-8265-493-L	s	CASSETTE COMPARTMENT ASSY
702	X-3678-080-5	o	ARM(L) ASSY, LID
703	3-319-686-01	s	SPRING, TENSION
704	3-329-998-01	s	SPRING, TENSION
705	3-343-503-01	s	SPRING, TENSION
706	3-571-829-00	s	SPRING, TENSION
707	3-612-386-01	o	PLATE(A), CAM
708	3-612-387-02	o	PLATE(B), CAM
709	3-680-032-01	o	ROLLER (A)
710	3-680-081-01	o	ROLLER (B)
711	3-680-258-01	o	ROLLER SOPPER
712	3-680-995-01	o	SPRING, EXTENSION
713	3-686-886-01	s	SPRING, TENSION
714	3-729-013-21	s	SCREW (M1.4X2.5), WASHERHEAD (+P)
715	3-624-199-01	s	RUBBER, BRAKE (EPDM)
716	4-606-897-01	s	SPRING, TENSION

Outside Panel and Main Block

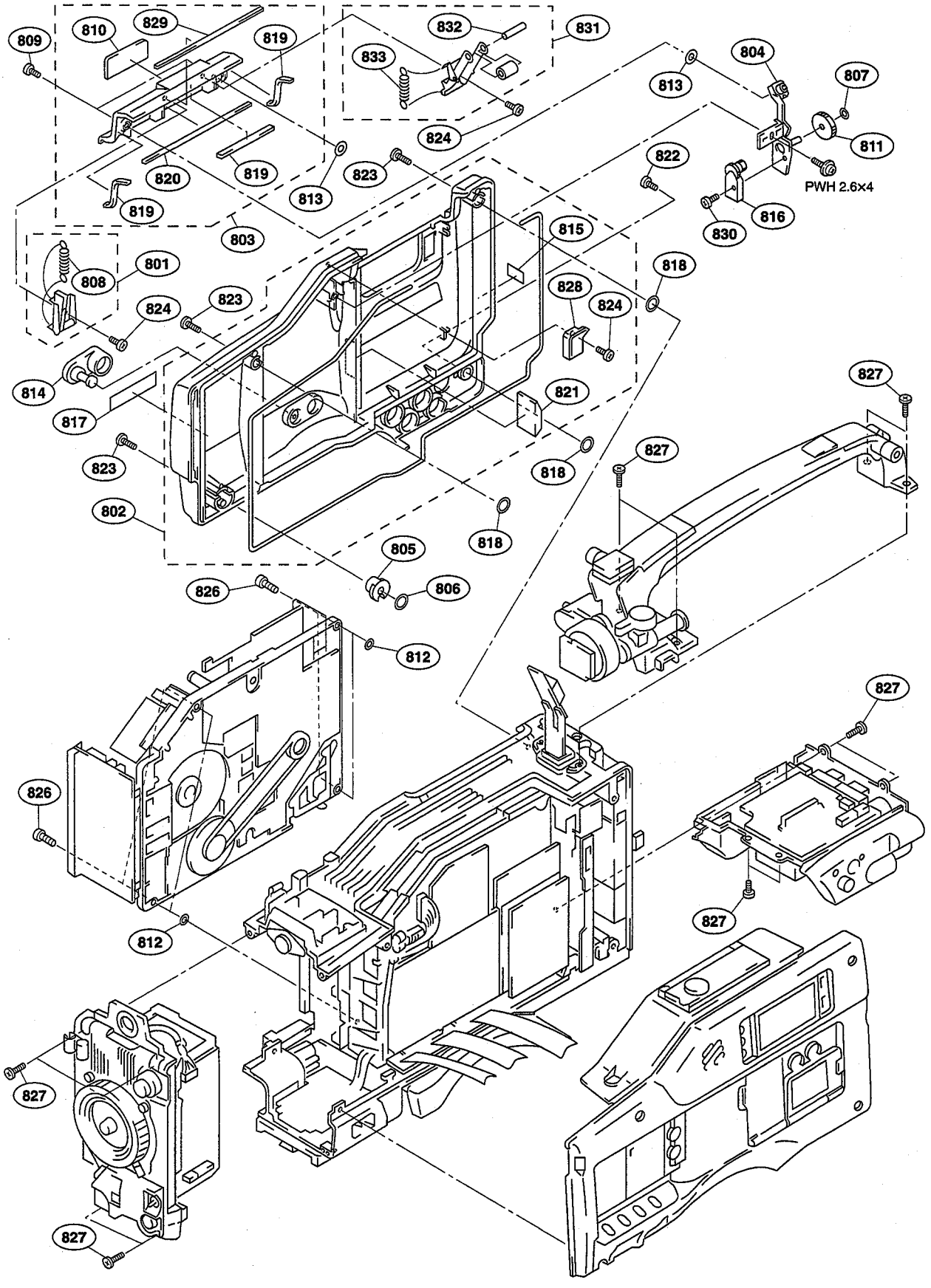

No.	Part No.	SP	Description
801	A-8278-840-B	s	CASSETTE RETAINER ASSY
802	X-3605-335-4	o	PANEL SUB ASSY, OUT SIDE
803	X-3605-336-5	o	LID SUB ASSY, FRONT
804	X-3679-528-4	o	ARM ASSY, LID
805	3-188-150-01	o	SUPPORT, SCREW
806	3-188-151-01	o	O RING (DIA 1)
807	3-315-384-31	s	WASHER, STOPPER
808	3-329-998-01	s	SPRING, TENSION
809	3-622-751-01	s	STAINLESS SCREW +B3X8
810	3-603-755-01	o	WINDOW (U), CASSETTE
811	3-611-654-01	o	GEAR, MIDWAY
812	3-669-465-01	s	WASHER (1.5), STOPPER
813	3-669-596-00	s	WASHER (2.3), STOPPER
814	3-679-711-01	o	COVER, ME
815	3-681-017-01	o	LABEL
816	3-681-528-11	s	DAMPER
817	3-681-884-02	o	LABEL, WS (790WS/790WSP)
818	3-682-791-01	s	RING O
819	3-683-023-01	s	RUBBER A, DROP PROTECTION (LID)
820	3-683-025-01	s	RUBBER B, DROP PROTECTION (LID)
821	3-683-035-01	o	PLATE GUIDE, CASSETTE
822	3-687-046-01	s	STAINLESS SCREW, +B4X10
823	3-687-048-01	s	STAINLESS SCREW, +B4X20
824	3-694-181-02	s	TYPE1, AROCK PRECISION +P2.6X5
826	3-729-084-41	s	BOLT (M2X8), HEXAGON HOLE
827	3-742-074-12	s	SCREW (+B3X8)
828	3-611-304-01	o	GUIDE, CASSETTE IN
829	3-604-823-02	s	RUBBER, DROP PROTECTION (LID)
830	3-203-203-01	s	SCREW (2X7), DAMPER (+PSW)
831	A-8279-344-A	s	ARM ASSY, CASSETTE, LOCK
832	3-661-278-01	s	PIN, PARALLEL
833	3-949-973-01	s	SPRING, TENSION

CCD Block and Front Panel

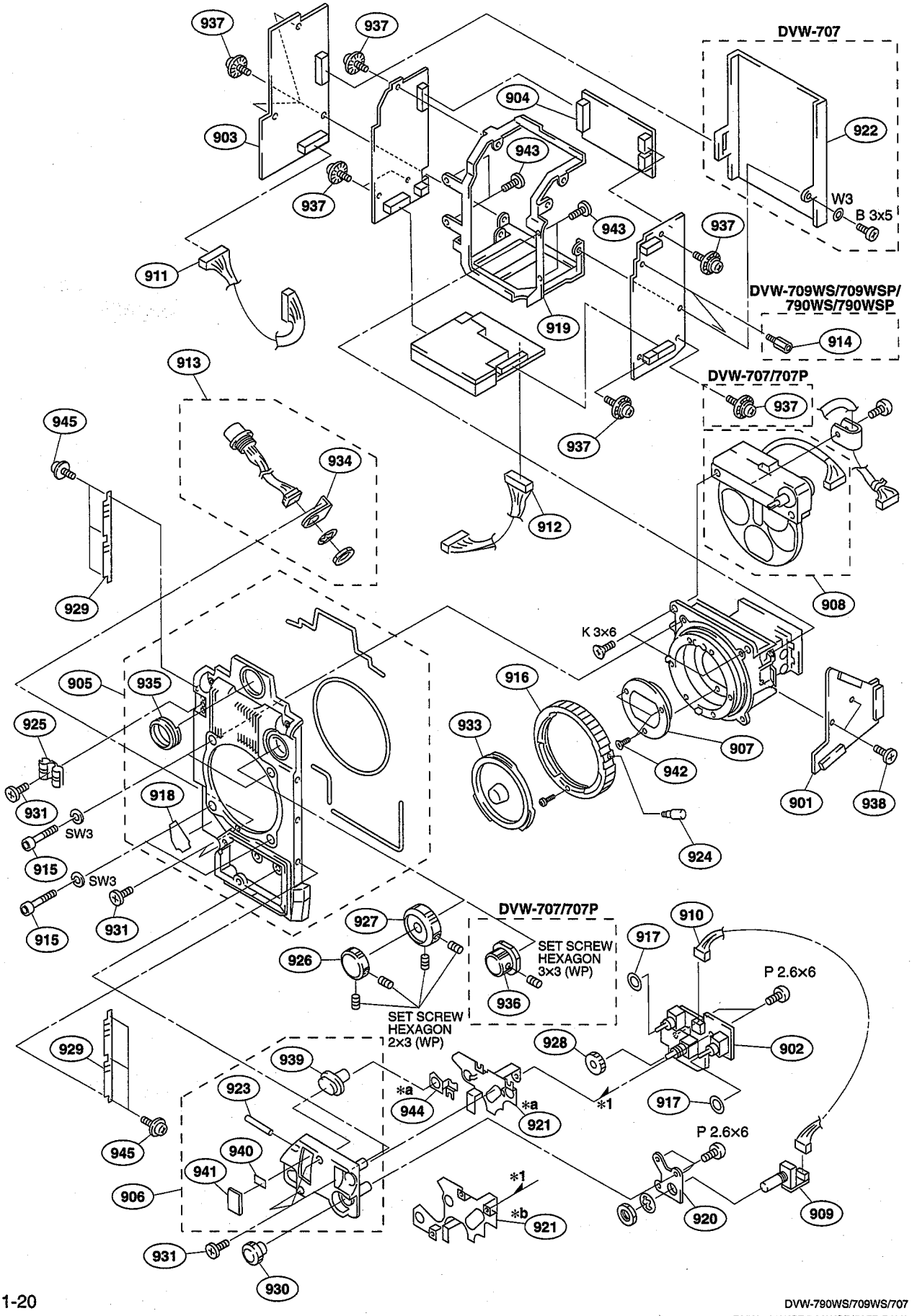

No.	Part No.	SP	Description
*a:	Serial No.10046 and higher (DVW-707:SY)		
	Serial No.30006 and higher (DVW-707/709WS/790WS:J)		
	Serial No.10066 and higher (DVW-709WS:SY)		
	Serial No.10056 and higher (DVW-790WS:SY)		
	Serial No.40101 and higher (DVW-707P)		
	Serial No.40141 and higher (DVW-709WSP)		
	Serial No.40156 and higher (DVW-790WSP)		
*b:	Serial No.10001 through 10045 (DVW-707:SY)		
	Serial No.30001 through 30005 (DVW-707/709WS/790WS:J)		
	Serial No.10001 through 10065 (DVW-709WS:SY)		
	Serial No.10001 through 10055 (DVW-790WS:SY)		
	Serial No.40001 through 40100 (DVW-707P)		
	Serial No.40001 through 40140 (DVW-709WSP)		
	Serial No.40001 through 40155 (DVW-790WSP)		
901	A-8277-768-A	o	MOUNTED CIRCUIT BOARD, CN-1183
902	1-672-907-11	o	PRINTED CIRCUIT BOARD, SW-971
903	A-8321-491-A	o	MOUNTED CIRCUIT BOARD, VA-191
904	A-8321-492-A	o	MOUNTED CIRCUIT BOARD, TG-207 (DVW-790WS/709WS)
	A-8321-509-A	o	MOUNTED CIRCUIT BOARD, TG-207P (DVW-790WSP/709WSP)
	A-8321-731-A	o	MOUNTED CIRCUIT BOARD, TG-206 (DVW-707)
	A-8321-732-A	o	MOUNTED CIRCUIT BOARD, TG-206P (DVW-707P)
905	X-3605-332-3	o	FRAME SUB ASSY, FRONT
906	X-3605-333-1	o	SWITCH COVER ASSY SUB, FRONT
907	1-467-820-21	o	FILTER UNIT, OPTICAL (DVW-790WS/709WS)
	1-467-820-11	o	FILTER UNIT, OPTICAL (DVW-790WSP/709WSP)
	1-547-559-31	o	FILTER UNIT, OPTICAL (DVW-707)
	1-547-259-11	o	FILTER UNIT, OPTICAL (DVW-707P)
908	1-475-492-11	o	DISK UNIT, FLITER (DVW-790WS/790WSP/709WS/709WSP)
909	1-672-908-11	o	PRINTED CIRCUIT BOARD, SW-983
910	1-959-372-11	o	HARNESS, SUB (SW971-SW983)
911	1-959-384-12	o	HARNESS, SUB (VA-DCP17)
912	1-959-386-11	o	HRANESS, SUB (BC-DCP17)
913	1-959-401-11	o	HARNESS (LENS)
914	2-270-601-00	o	SUPPORT
915	2-623-773-11	s	BOLT (M3X8), STAINLESS
916	3-186-442-01	o	RING, MOUNT
917	3-312-823-00	s	PACKING, KNOB
918	3-603-614-01	o	PLATE, PROTECTION
919	3-616-675-01	o	STAY, CHB
920	3-616-722-01	o	BRACKET, R-E FITTING
921 *a	3-616-723-02	o	PLATE,FRONT SHIELD
*b	3-616-723-01	o	PLATE,FRONT SHIELD
922	3-622-409-01	o	PLATE (TG), SHIELD
923	3-649-266-01	o	PIN, PARALLEL
924	3-678-629-00	s	LEVER, MOUNT
925	3-679-659-03	o	CLAMP, CABLE
926	3-679-670-03	s	KNOB, FILTER(ND) (DVW-790WS/790WSP/709WS/709WSP)
927	3-679-671-02	s	KNOB, FILTER(CC) (DVW-790WS/790WSP/709WS/709WSP)
928	3-679-679-03	s	KNOB, VR(AUDIO)
929	3-680-483-01	o	FINGER, SHIELD
930	3-692-111-01	s	KNOB, RE
931	3-694-181-02	s	TYPE1, AROCK PRECISION +P2.6X5
933	3-699-048-01	s	CAP, MOUNT
934	3-709-105-01	o	BRACKET, LENS
935	3-710-024-01	o	PACKING, VF
936	3-710-054-01	s	KNOB FILTER (DVW-707/707P)
937	3-623-677-01	s	PRECISION SCREW (M1.4X3.5), EXT
938	3-729-061-01	s	SCREW (M2) (TYPE 1)
939	3-729-069-01	s	BUTTON, VTR START
940	3-742-066-01	o	SPRING, SHUTTER
941	3-742-067-04	o	LID, SHUTTER
942	7-627-452-38	s	SCREW, PRECISION +K2X5
943	7-627-554-27	s	SCREW, PRECITION +P2X6 TYPE1
944 *a	3-622-832-01	o	PLATE (2), FRONT SHIELD
945	3-729-013-41	s	SCREW (M1.4X3.5), WASHERHEAD (+P)

Inside panel-1

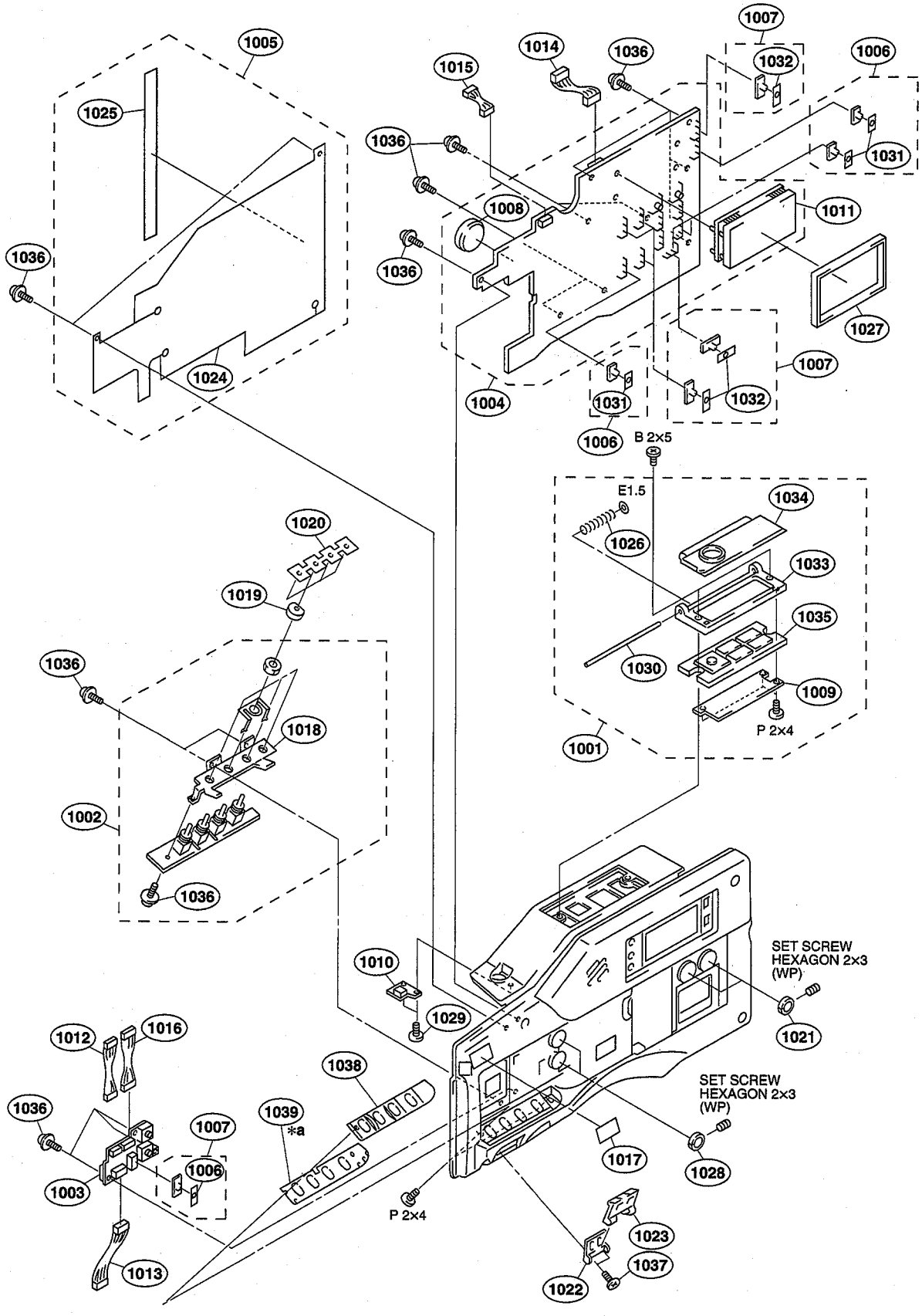

No.	Part No.	SP	Description

Note
*a: Serial No.10031 through 10055 (DVW-707:SY)
Serial No.30006 through 30015 (DVW-707/709WS/790WS:J)
Serial No.10046 through 10140 (DVW-709WS:SY)
Serial No.10036 through 10190 (DVW-790WS:SY)
Serial No.40071 through 40225 (DVW-707P)
Serial No.40121 through 40345 (DVW-709WSP)
Serial No.40126 through 40610 (DVW-790WSP)

1001	A-8316-530-A	s	KEY BOARD ASSY
1002	A-8321-457-A	o	MOUNTED CIRCUIT BOARD, CP-329
1003	A-8321-458-A	o	MOUNTED CIRCUIT BOARD, VR-248
1004	A-8321-470-A	o	MOUNTED CIRCUIT BOARD, TC-101
1005	X-3605-465-5	o	PLATE ASSY, TC SHIELD
1006	X-3678-125-1	s	KNOB (2 POSI) ASSY,SW
1007	X-3678-126-1	s	KNOB (3 POSI) ASSY,SW
1008	1-528-229-11	o	BATTERY, LITHIUM (CR-2450)
1009	1-652-769-12	o	PRINTED CIRCUIT BOARD, KY-293
1010	1-672-900-11	o	PRINTED CIRCUIT BOARD, SW-972
1011	1-810-586-11	s	LCD MODULE
1012	1-959-373-11	o	HARNESS, SUB (VR248-TC101)
1013	1-959-374-11	o	HARNESS, SUB (VR248-CP329)
1014	1-959-376-11	o	HARNESS, SUB (KY293-TC101)
1015	1-959-377-11	o	HARNESS, SUB (SW972-TC101)
1016	1-959-378-11	o	HARNESS, SUB (TC101-VR248)
1017	3-182-055-02	s	LABEL (1), FILTER (DVW-790WS/790WSP/709WS/709WSP)
	3-611-743-01	s	LABEL (3), FILTER (DVW-707/707P)
1018	3-603-713-01	o	HOLDER SWITCH
1019	3-603-761-01	o	DROP PROTECTION (CAM SW)
1020	3-603-767-01	o	BLIND SHEET (CAM SW)
1021	3-611-740-01	o	KNOB (2), VR
1022	3-616-681-02	s	SUPPORT, MENU COVER
1023	3-616-682-02	s	LID, MENU
1024	3-616-687-03	o	PLATE, TC SHIELD
1025	3-617-517-01	o	CUSHION (FAN2)
1026	3-673-281-00	o	SPRING, COMPRESSION
1027	3-680-214-01	o	SPACER LCD
1028	3-680-219-02	s	KNOB, VR
1029	3-701-468-01	s	SCREW (+-2X4), LOCK
1030	3-717-854-01	o	SHAFT, KEY BOARD COVER
1031	3-717-902-21	o	PLATE, ORNAMENTAL
1032	3-717-902-31	o	PLATE, ORNAMENTAL
1033	3-718-042-21	o	FRAME, KEY BOARD
1034	3-718-043-23	o	COVER, KEY BOARD
1035	3-718-044-01	s	COVER, KEY BOARD RUBBER
1036	3-729-013-41	s	SCREW (M1.4X3.5), WASHERHEAD (+P)
1037	3-729-061-01	s	SCREW (M2) (TYPE 1)
1038	3-603-677-01	o	PLATE, ORNAMENTAL SW CAMERA
1039*a	3-622-788-01	o	SHEET, ORNAMENTAL PLATE STICK

Inside Panel-2

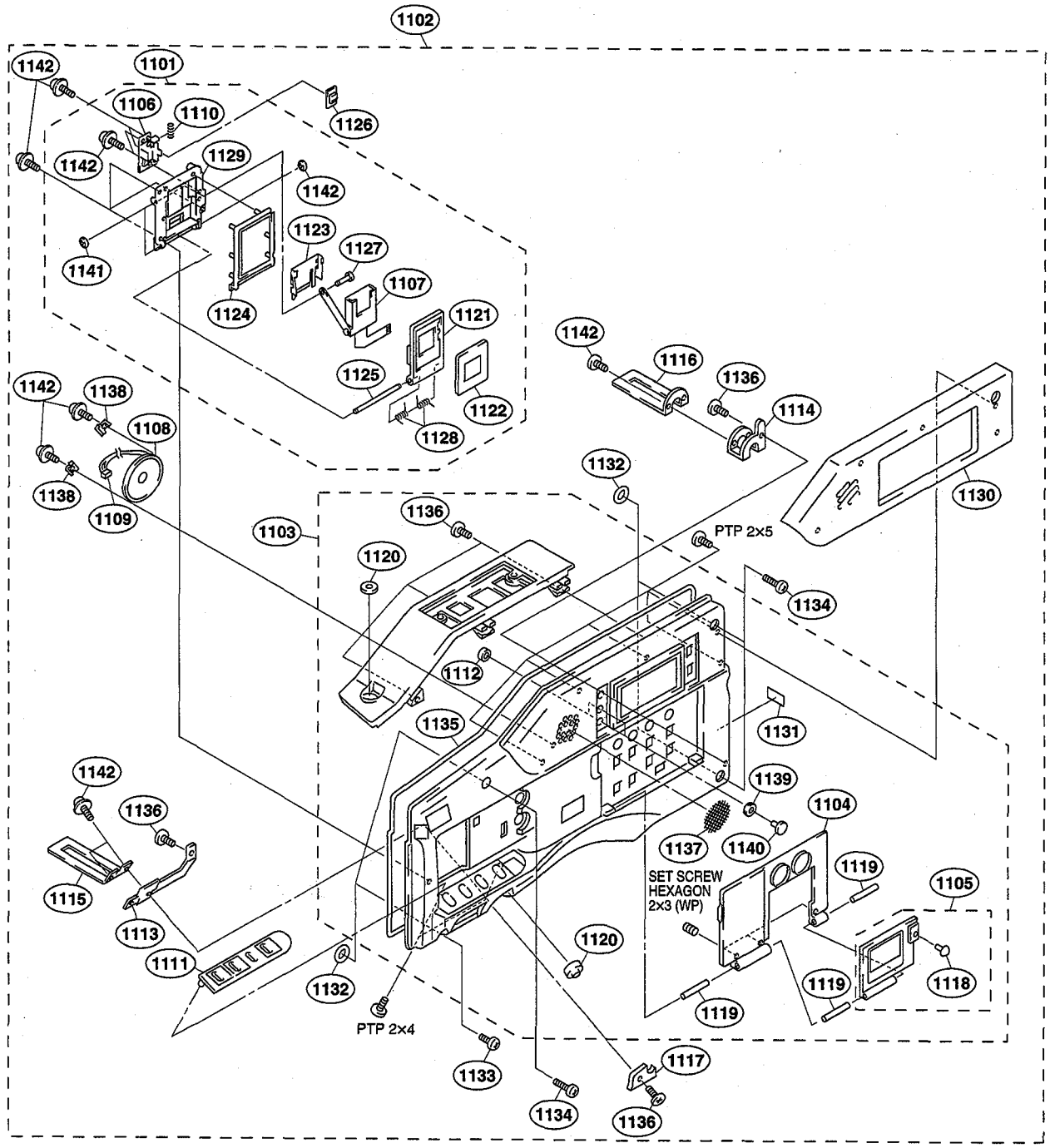

No.	Part No.	SP	Description
1101	A-8263-224-C	o	DOOR ASSY, CARD
1102	A-8321-469-E	o	PANEL SUB (A) ASSY, IN SIDE
1103	X-3605-331-5	o	PANEL SUB ASSY, IN SIDE
1104	X-3605-337-1	o	DOOR(A) ASSY, SW
1105	X-3605-338-1	o	DOOR(B) ASSY, SW
1106	X-3678-063-5	o	BRACKET ASSY, CARD KNOB
1107	X-3678-064-1	s	CONNECTOR ASSY
1108	1-503-293-00	s	SPEAKER
1109	1-953-418-11	o	HARNESS, SUB (TC7-SPK)
1110	3-344-751-01	s	SPRING, COMPRESSION
1111	3-603-677-01	o	PLATE, ORNAMENTAL SW CAMERA
1112	3-608-362-01	s	CLAMP (2), PUSH SW
1113	3-616-696-02	o	BRACKET, HINGE
1114	3-616-698-01	o	BRACKET (2), HINGE
1115	3-616-714-01	s	HINGE (F)
1116	3-616-715-02	s	HINGE (R)
1117	3-616-729-01	o	PLATE, IN SIDE BLIND
1118	3-644-002-00	o	CUSHION, HANDLE
1119	3-649-266-01	o	PIN, PARALLEL
1120	3-676-244-03	s	COVER, SWITCH
1121	3-679-581-02	o	DOOR, CARD
1122	3-679-582-03	o	WINDOW (CARD), DOOR
1123	3-679-583-02	o	HOLDER (CN)
1124	3-679-587-01	s	RUBBER (CARD), DROP PROTECTION
1125	3-679-589-01	o	SHAFT (CARD), DOOR
1126	3-679-590-01	s	KNOB (CARD)
1127	3-679-591-01	o	SHAFT (CARD), LINK
1128	3-679-592-01	o	SPRING (CARD), TORSION
1129	3-679-593-01	o	CARD PANEL
1130	3-680-954-02	s	PAD, SIDE
1131	3-681-017-01	o	LABEL
1132	3-682-791-01	s	RING O
1133	3-687-047-01	s	STAINLESS SCREW, +B4X16
1134	3-687-048-01	s	STAINLESS SCREW, +B4X20
1135	3-692-593-01	o	TUBE, SHIELD
1136	3-694-181-02	s	TYPE1, AROCK PRECISION +P2.6X5
1137	3-724-716-02	s	SHEET, DROP PROTECTION
1138	3-724-726-01	o	HOLDER, SPEAKER
1139	3-724-758-02	s	RUBBER (PUSH), DROP PROTECTION
1140	3-724-759-03	s	PUSH (SW)
1141	3-726-829-01	s	WASHER, STOPPER
1142	3-729-013-41	s	SCREW (M1.4X3.5), WASHERHEAD(+P)

Connector Box

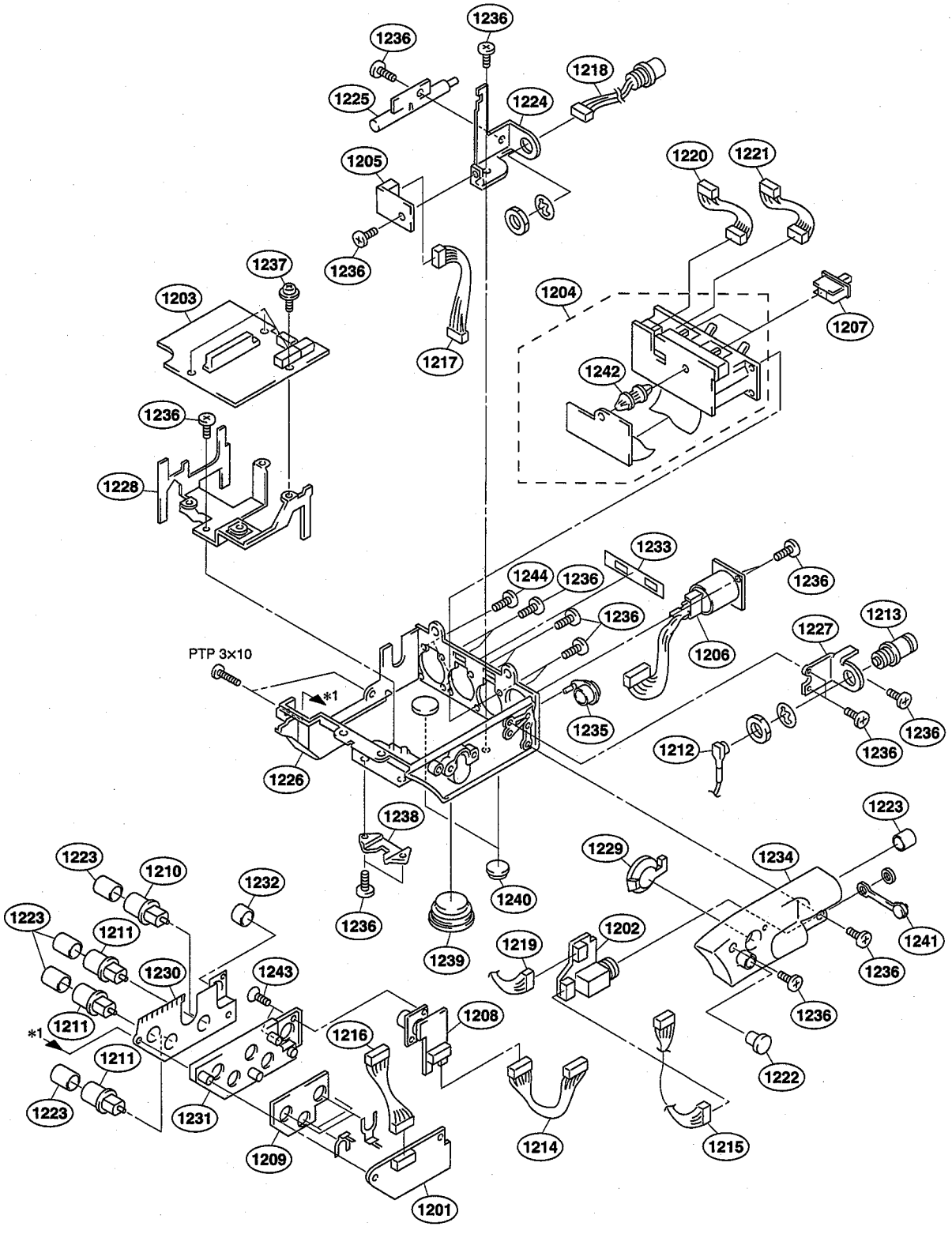

No.	Part No.	SP	Description
1201	A-8321-251-A	o	MOUNTED CIRCUIT BOARD, IO-178
1202	A-8321-459-A	o	MOUNTED CIRCUIT BOARD, HP-93
1203	A-8321-460-A	o	MOUNTED CIRCUIT BOARD, CNB-11 (for SY)
	A-8321-499-A	o	MOUNTED CIRCUIT BOARD, CNB-11B (for J)
1204	A-8321-461-A	o	MOUNTED CIRBUIT BOARD, AXM-21 (for SY)
	A-8321-500-A	o	MOUNTED CIRBUIT BOARD, AXM-21B (for J)
1205	A-8321-462-A	o	MOUNTED CIRCUIT BOARD, LP-111
1206	A-8321-464-A	o	MOUNTED CIRCUIT BOARD, DC-106
1207	X-3678-131-3	s	KNOB(M)ASSY, SW
1208	1-672-906-11	o	PRINTED CIRCUIT BOARD, RM-180
1209	1-672-911-11	o	PRINTED CIRCUIT BOARD, VSE-32
1210	1-766-380-11	s	CONNECTOR, COAXIAL (BNC TYPE)
1211	1-766-381-11	s	CONNECTOR, COAXIAL (BNC TYPE)
1212	1-783-251-11	s	CABLE ASSEMBLY, COAXIAL
1213	1-784-240-11	s	CONVERTER, COAXIAL CONNECTOR
1214	1-959-370-11	o	HARNESS, SUB (RM180-CNB11)
1215	1-959-371-11	o	HARNESS, SUB (HP93-TC101)
1216	1-959-375-11	o	HARNESS, SUB (CNB11-IO178)
1217	1-959-380-11	o	HARNESS, SUB (CNB-LP111)
1218	1-959-381-11	o	HARNESS, SUB (CNB11-DC OUT)
1219	1-959-383-11	o	HARNESS, SUB (CNB11-HP93)
1220	1-959-388-13	o	HARNESS, SUB (AUDIO POWER)
1221	1-959-389-13	o	HARNESS, SUB (AUDIO LINE)
1222	3-426-449-03	s	FOOT, RUBBER
1223	3-604-795-01	s	CAP BNC
1224	3-616-672-03	o	STAY, DC OUT
1225	3-616-673-01	o	PLATE, LIGHT GUIDE
1226	3-616-686-02	o	BOX, CONNECTOR
1227	3-616-725-01	s	HOLDER, BNC
1228	3-616-726-02	o	STAY, CNB
1229	3-616-728-01	o	BLIND, RM
1230	3-616-730-02	o	PLATE, BNC GROUND
1231	3-616-731-01	o	SUPPORT, BNC
1232	3-617-514-01	s	REMOTE CAP
1233	3-680-265-01	o	PLATE ORNAMENTAL AUDIO (UC/EK) (for SY)
	3-680-251-01	o	PLATE ORNAMENTAL AUDIO (for J)
1234	3-680-268-11	o	PANEL, ORNAMENTAL(CB)
1235	3-680-269-01	s	RUBBUR (DO), DROP PROTECTION
1236	3-694-181-02	s	TYPE1, AROCK PRECISION +P2.6X5
1237	3-701-468-01	s	SCREW (+-2X4), LOCK
1238	3-711-703-01	o	STOPPER
1239	3-723-096-01	o	OVER, BREAKER
1240	3-723-097-01	o	FOOT, RUBBER
1241	3-849-405-00	s	COVER, EARPHONE JACK
1242	4-622-069-01	s	SUPPORT, MODEM
1243	7-627-454-38	s	SCREW, PRECISION +K2.6X5
1244	7-627-553-18	s	SCREW, PRECISION +P2X2

Handle

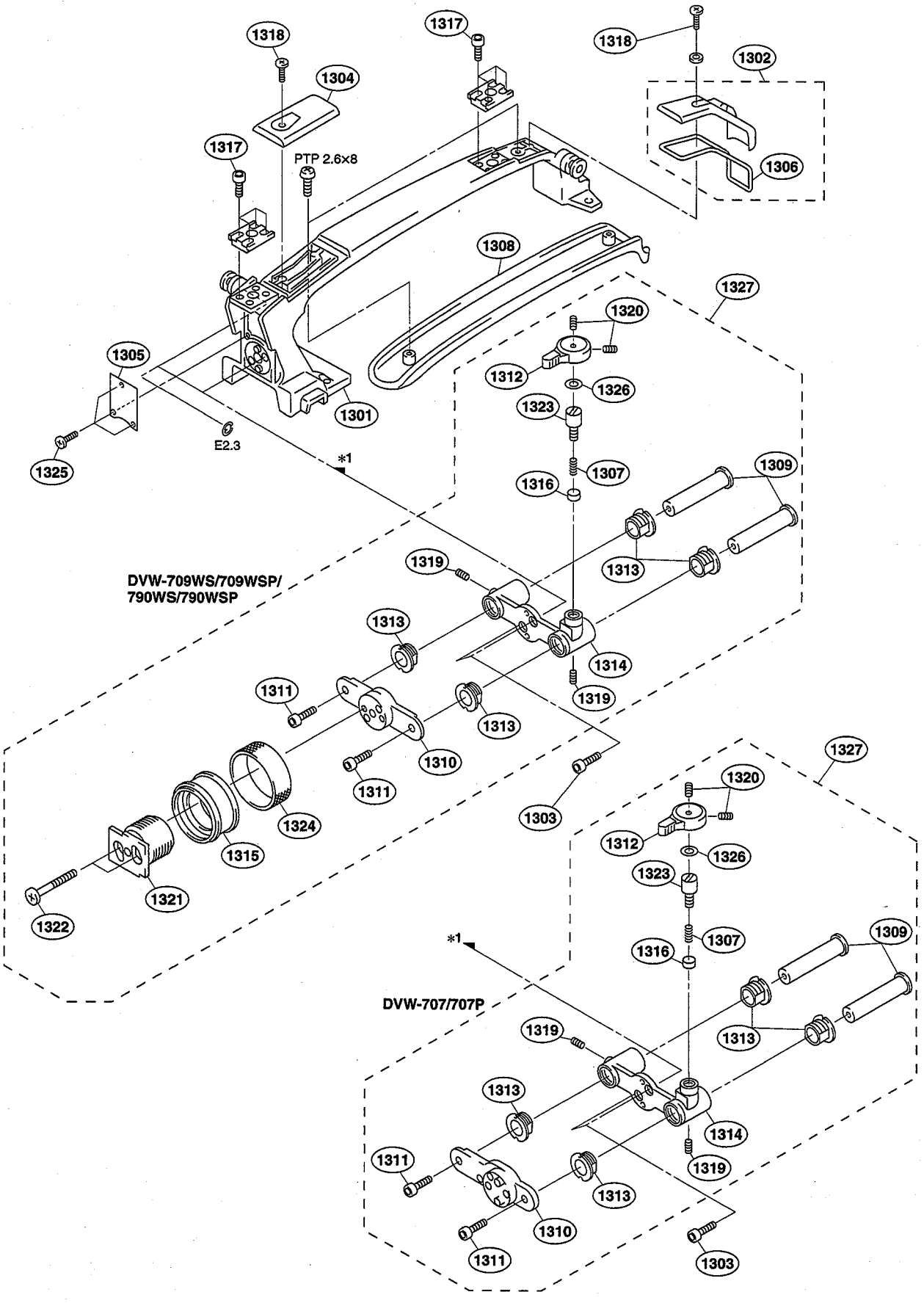
1318
1317
1318
1302
1304
1317
PTP 2.6×8
1306
1308
1327
1320
1305
1312
1326
1323
1301
E2.3
1325
*1
1307
1316
1309
1313
DVW-709WS/709WSP/
790WS/790WSP
1319
1313
1314
1311
1319
1313
1310
1311
1303
1324
1315
1321
1322
1327
1320
1312
1326
1323
1307
1316
1309
*1
DVW-707/707P
1319
1313
1313
1314
1311
1319
1313
1310
1311
1303

No.	Part No.	SP	Description
1301	X-3605-334-2	o	HANDLE SUB ASSY
1302	X-3605-342-1	o	COVER ASSY,REAR
1303	2-623-773-11	s	BOLT (M3X8), STAINLESS
1304	3-603-702-12	o	COVER, FRONT
1305	3-603-703-02	o	PLATE, HANDLE
1306	3-605-904-01	o	TUBE, DROP PROTECTION
1307	3-612-822-01	s	SPRING, COMPRESSION
1308	3-616-683-02	o	COVER (2), BOTTOM
1309	3-617-743-02	o	PIPE,VF SLIDE
1310	3-617-745-01	o	FIXED TABLE(WS), VF SHOE (DVW-790WS/790WSP/709WS/709WSP)
	3-617-744-01	o	FIXED TABLE(WS), VF SHOE (DVW-707/707P)
1311	3-657-705-91	o	BOLT (M4X25), HEXAGON HOLE
1312	3-673-046-02	s	LEVER, LOCK
1313	3-679-684-01	o	REST, ARM
1314	3-679-685-11	o	TABEL, FIXED, VF SLIDE (DVW-790WS/790WSP/709WS/709WSP)
	3-679-685-02	o	TABLE, FIXED, VF SLIDE (DVW-707/707P)
1315	3-679-698-01	o	RING(C), LOCK (DVW-790WS/790WSP/709WS/709WSP)
1316	3-679-702-01	o	CUSION, STOPPER
1317	3-689-039-11	s	SCREW (M2X6), SMALL
1318	3-694-181-02	s	TYPE1, AROCK PRECISION +P2.6X5
1319	3-701-505-00	s	SET SCREW, DOUBLE POINT 3X3
1320	3-701-507-00	s	SET SCREW, DOUBLE POINT,(M3X5)
1321	3-627-853-01	s	SHOE, SLIDE
1322	3-711-765-01	s	BOLT (M3), HEXAGON SOCKET (DVW-790WS/790WSP/709WS/709WSP)
1323	3-711-794-12	o	PIN, STOPPER (DVW-790WS/790WSP/709WS/709WSP)
	3-711-794-03	o	PIN, STOPPER (DVW-707/707P)
1324	3-720-919-01	o	RUBBER, LOCK RING (DVW-790WS/790WSP/709WS/709WSP)
1325	3-729-061-01	s	SCREW (M2) (TYPE1)
1326	3-895-622-01	s	RING (DIA. 5), O
1327	A-8279-111-C	o	SLIDE ASSY (WS), VF (DVW-790WS/790WSP/709WS/709WSP)
	A-8279-110-B	o	SLIDE ASSY (707), VF (DVW-707/707P)

Plug-in Boards

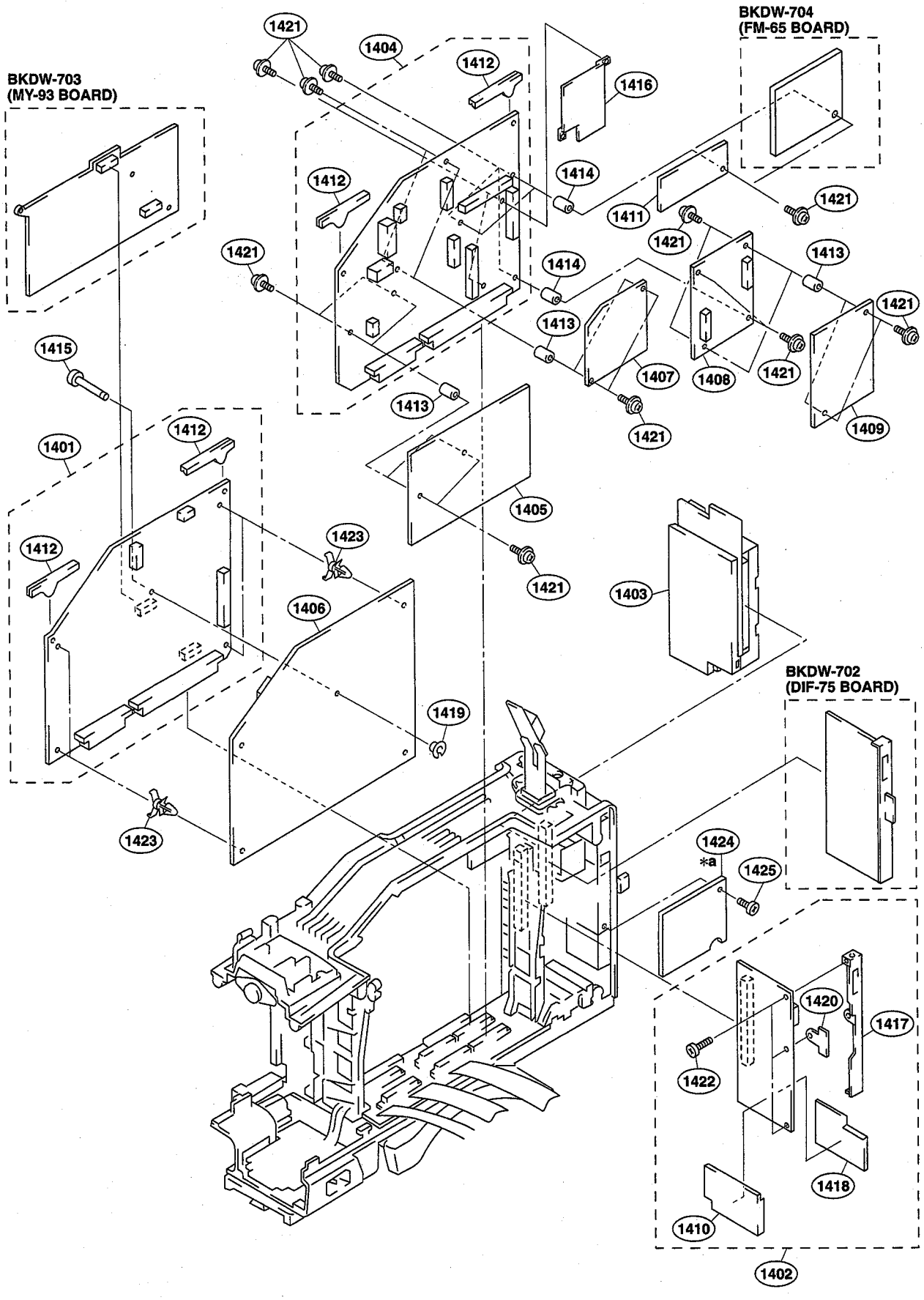

No.	Part No.	SP	Description

Note
*a: Serial No.30006 and higher (DVW-707/709WS/790WS:J)
Serial No.40141 and higher (DVW-709WSP/790WSP)
Serial No.10056 and higher (DVW-790WS:SY)
Serial No.10046 and higher (DVW-707:SY)
Serial No.40101 and higher (DVW-707P)
Serial No.10066 and higher (DVW-709WS:SY)

1401	A-8321-452-A	o	MOUNTED CIRCUIT BOARD, DVP-17
1402	A-8321-465-A	o	MOUNTED CIRCUIT BOARD, SV-210
1403	A-8321-477-A	s	CONVERTER ASSY, DC-DC
1404	A-8321-481-A	o	MOUNTED CIRCUIT BOARD, DCP-17
1405	A-8321-482-A	o	MOUNTED CIRCUIT BOARD, ES-23 (DVW-790WS/709WS/707)
	A-8321-508-A	o	MOUNTED CIRCUIT BOARD, ES-23P (DVW-790WSP/709WSP/707P)
1406	A-8321-483-A	o	MOUNTED CIRCUIT BOARD, DVP-14
1407	A-8321-610-A	o	MOUNTED CIRCUIT BOARD, AD-155
1408	A-8321-706-A	o	MOUNTED CIRCUIT BOARD, RC-69 (DVW-790WS/790WSP/709WS/709WSP)
1409	A-8321-707-A	o	MOUNTED CIRCUIT BOARD, RC-75 (DVW-790WS/790WSP/709WS/709WSP)
1410	X-3678-190-1	o	CASE ASSY SV, SHIELD
1411	1-672-913-11	o	PRINTED CIRCUIT BOARD, BF-74
1412	3-603-737-02	o	LEVER, BOARD
1413	3-616-669-01	o	SUPPORT (5)
1414	3-616-670-01	o	SUPPORT (7)
1415	3-616-671-01	o	SHAFT, SUPPORT
1416	3-616-690-01	o	HEAT SINK
1417	3-680-060-02	o	PLATE (SV-148), ORNAMENTAL
1418	3-683-016-02	o	PLATE, SHIELD, SV
1419	3-703-075-00	s	CAP 2, SHAFT
1420	3-724-753-01	o	PULL RING
1421	3-729-013-41	s	SCREW (M1.4X3.5),WASHERHEAD (+P)
1422	3-729-061-01	s	SCREW (M2) (TYPE1)
1423	3-952-863-01	o	SPACER, CIRCUIT BOARD
1424*a	3-623-328-01	o	PLATE (FAN), SHIELD
1425	3-694-181-02	o	TYPE 1, AROCK PRECISION +P2.6X5

Main Frame-1

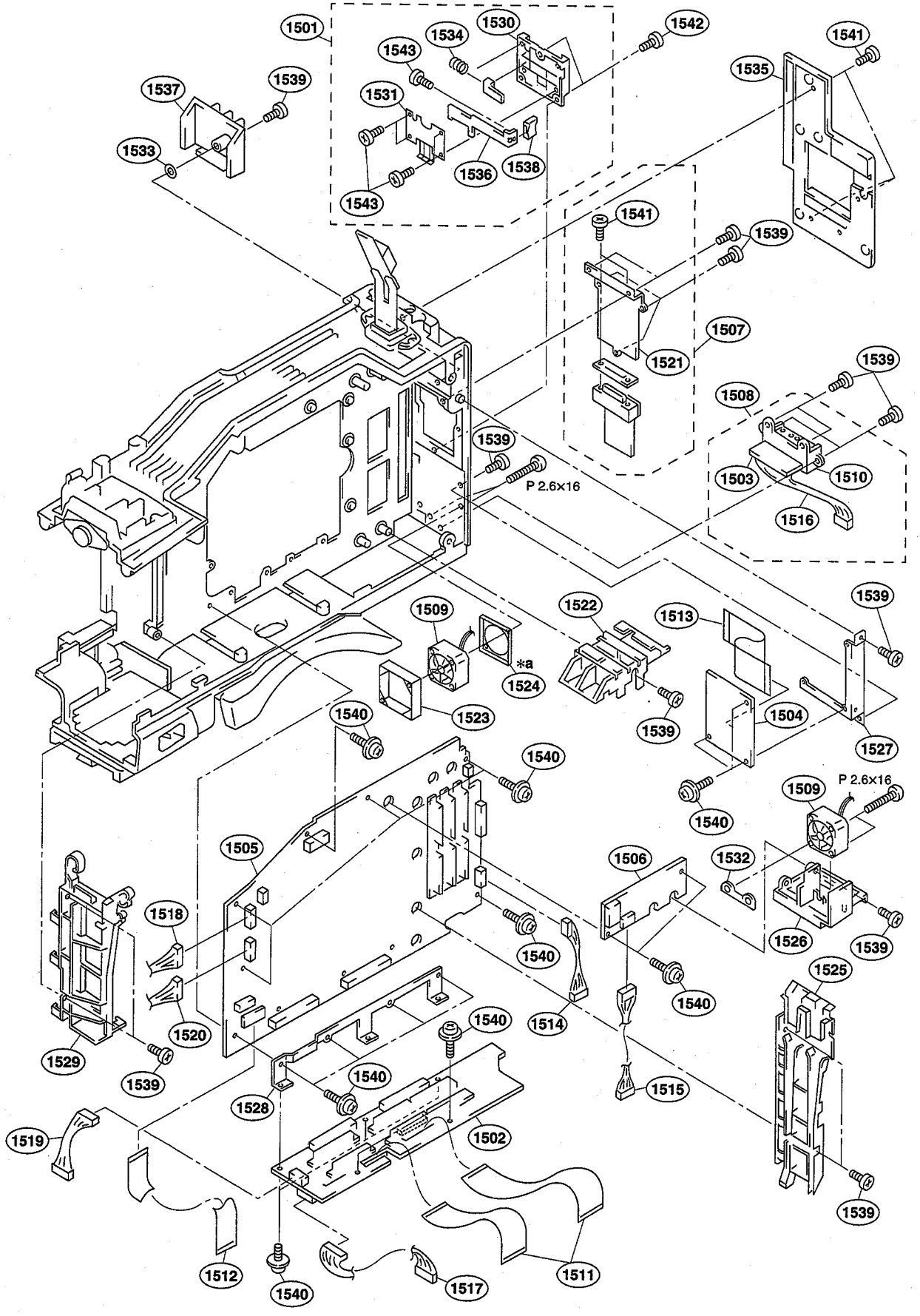

1501
1530
1534
1543
1542
1541
1535
1537
1539
1531
1533
1536
1538
1543
1541
1539
1507
1521
1539
1508
1539
P 2.6x16
1503
1510
1516
1509
1522
1513
1539
*a
1524
1523
1539
1504
1527
1540
1540
1540
1509
P 2.6x16
1505
1506
1532
1518
1540
1526
1539
1525
1540
1520
1514
1540
1529
1539
1540
1515
1528
1519
1502
1539
1512
1540
1517
1511

No.	Part No.	SP	Description
*a: Serial No.10001 through 10030 (DVW-707:SY)			
Serial No.30001 through 30005 (DVW-707/709WS/790WS:J)			
Serial No.10001 through 10045 (DVW-709WS:SY)			
Serial No.10001 through 10035 (DVW-790WS:SY)			
Serial No.40001 through 40070 (DVW-707P)			
Serial No.40001 through 40120 (DVW-709WSP)			
Serial No.40001 through 40125 (DVW-790WSP)			
1501	A-8279-091-A	s	MOUNT ASSY,V
1502	A-8321-221-A	o	MOUNTED CIRCUIT BOARD, MB-810
1503	A-8321-255-A	o	MOUNTED CIRCUIT BOARD, DC-101
1504	A-8321-256-A	o	MOUNTED CIRCUIT BOARD, CI-21
1505	A-8321-456-A	o	MOUNTED CIRCUIT BOARD, MB-811
1506	A-8321-474-A	o	MOUNTED CIRCUIT BOARD, PS-533
1507	A-8321-478-A	o	FITTING ASSY, 40P
1508	A-8321-487-A	o	CONNECTOR ASSY, BATTERY
1509	1-763-331-11	s	FAN, DC
1510	1-766-377-12	s	CONNECTOR, BATTERY
1511	1-790-486-11	s	CABLE, FLEXIBLE FLAT (30 CORE)
1512	1-790-487-11	s	CABLE, FLEXIBLE FLAT (20 CORE)
1513	1-790-583-11	s	CABLE, FLEXIBLE FLAT (45 CORE)
1514	1-959-382-11	o	HARNESS, SUB (CNB11-MB811)
1515	1-959-391-11	o	HARNESS, SUB (CNB11-PS533)
1516	1-959-393-11	o	HARNESS, SUB (CNB11-BATT IN)
1517	1-959-394-11	o	HARNESS, SUB (MB810-IF716)
1518	1-959-397-11	o	HARNESS, SUB (DR-MB811)
1519	1-959-399-11	o	HARNESS, SUB (IF716-MB810)
1520	1-959-400-11	o	HARNESS, SUB (MB811-DR)
1521	3-603-717-01	o	40P BRACKET (B)
1522	3-616-666-01	o	GUIDE (R3), PC BOARD
1523	3-616-691-02	o	NUT, PLATE(FAN)
1524*a	3-616-692-02	o	CUSHION (FAN)
1525	3-616-708-01	o	GUIDE (R1), PC BOARD
1526	3-616-709-01	o	GUIDE (R2), PC BOARD
1527	3-616-711-01	o	BRACKET (CI)
1528	3-616-717-01	o	BRACKET (MB)
1529	3-616-718-01	o	GUIDE (F), PC BOARD
1530	3-616-721-01	o	MOUNT (2), V
1531	3-616-724-01	o	LID, REAR
1532	3-617-516-01	o	NUT PLATE (FAN2)
1533	3-669-595-00	s	WASHER (2), STOPPER
1534	3-679-648-02	o	SPRING, COMPRESSION
1535	3-679-669-05	o	SPACER
1536	3-679-688-02	o	LEVER, RELEASE
1537	3-680-485-03	o	COVER, CONNECTOR
1538	3-680-952-01	o	KNOB, RELEASE LEVER
1539	3-694-181-02	s	TYPE1, AROCK PRECISION +P2.6X5
1540	3-701-468-01	s	SCREW (+-2X4), LOCK
1541	3-729-061-01	s	SCREW (M2) (TYPE1)
1542	3-742-074-11	s	SCREW (+B3X8)
1543	7-627-553-38	s	SCREW, PRECISION +P2X3

Main Frame-2

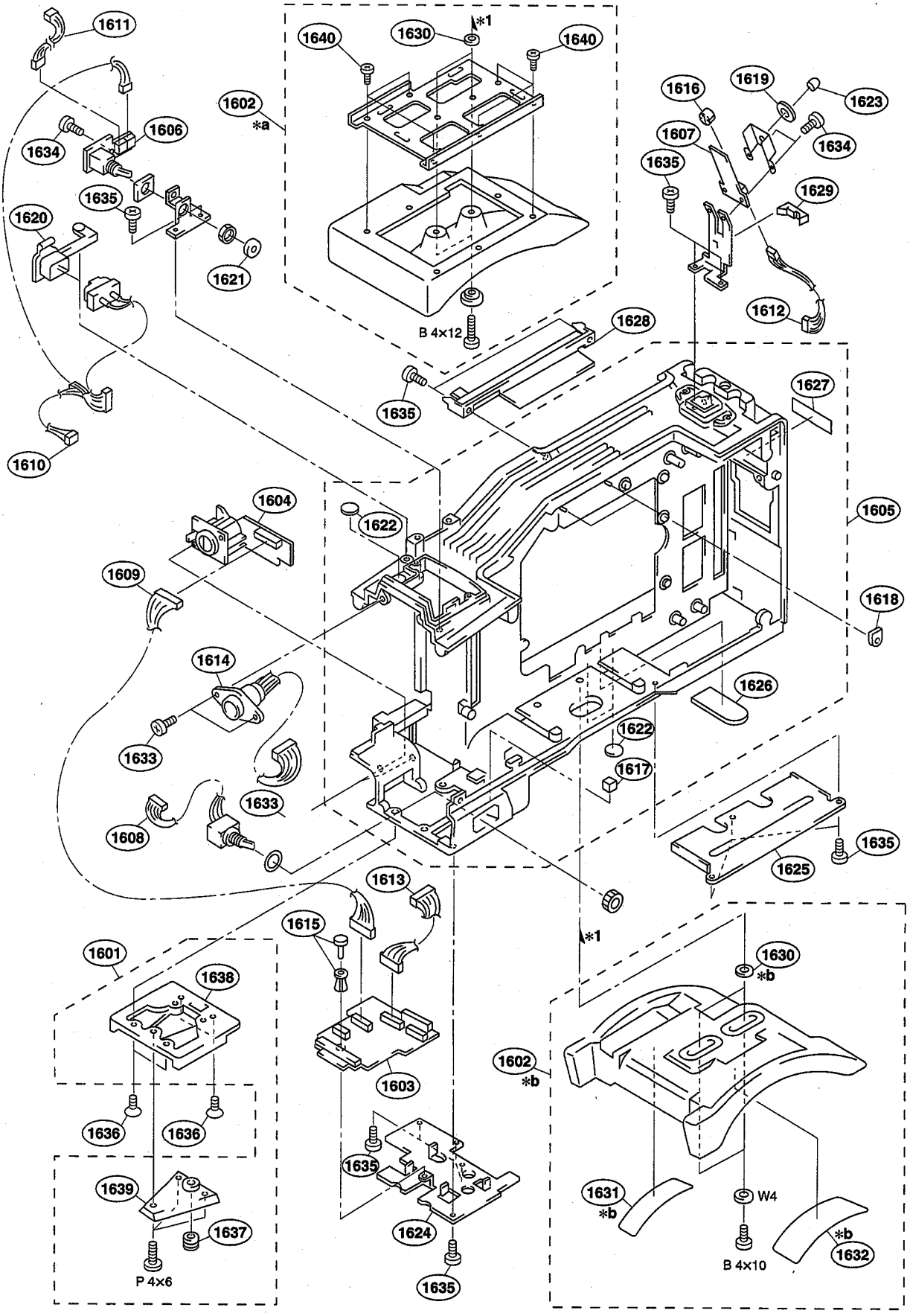
1611
1640
1630
*1
1640
1602
*a
1606
1634
1635
1620
1621
1610
B 4x12
1628
1635
1616
1619
1623
1607
1634
1635
1629
1612
1627
1604
1622
1605
1609
1618
1614
1626
1633
1622
1617
1633
1608
1635
1625
1613
1615
*1
1601
1638
1630
*b
1602
*b
1603
1636
1636
1635
1639
1637
1624
P 4x6
1635
1631
*b
W4
*b
1632
B 4x10

No.	Part No.	SP	Description

Note
*a: Serial No.10056 and higher (DVW-707:SY)
Serial No.30011 and higher (DVW-707/709WS/790WS:J)
Serial No.10126 and higher (DVW-709WS:SY)
Serial No.10161 and higher (DVW-790WS:SY)
Serial No.40191 and higher (DVW-707P)
Serial No.40256 and higher (DVW-709WSP)
Serial No.40511 and higher (DVW-790WSP)
*b: Serial No.10001 through 10055 (DVW-707:SY)
Serial No.30001 through 30010 (DVW-707/709WS/790WS:J)
Serial No.10001 through 10125 (DVW-709WS:SY)
Serial No.10001 through 10160 (DVW-790WS:SY)
Serial No.40001 through 40190 (DVW-707P)
Serial No.40001 through 40255 (DVW-709WSP)
Serial No.40016 through 40510 (DVW-790WSP)

1601	A-7612-385-C	s	SHOE (B) ASSY, V
1602*a	A-8279-355-A	s	PAD ASSY, SHOULDER
*b	A-8279-095-A	s	PAD ASSY, SHOULDER
1603	A-8322-786-A	o	MOUNTED CIRCUIT BOARD, IF-716
1604	A-8322-785-A	o	MOUNTED CIRCUIT BOARD, MA-94
1605	X-3605-339-6	o	FRAME SUB ASSY,MAIN
1606	1-672-927-11	o	PRINTED CIRCUIT BOARD, SW-973
1607	1-672-928-11	o	PRINTED CIRCUIT BOARD, LP-109
1608	1-959-006-11	o	HARNESS, SUB (MB-PSW)
1609	1-959-379-11	o	HARNESS, SUB (MA94-IF716)
1610	1-959-392-12	o	HARNESS, SUB (PS533-LIGHT/SW973)
1611	1-959-395-11	o	HARNESS, SUB (SW973-MB811)
1612	1-959-396-11	o	HARNESS, SUB (LP109-MB811)
1613	1-959-398-11	o	HARNESS, SUB (IF716-MB811)
1614	1-959-402-11	o	HARNESS (VF)
1615	2-279-715-11	s	RIVET, NYLON
1616	2-358-583-01	o	HOLDER, LED
1617	3-564-945-01	s	CUSHION (B)
1618	3-603-658-01	o	CLAMP, HARNESS
1619	3-603-735-01	o	DROP PROTECTION (SW)
1620	3-603-736-02	o	COVER, LIGHT CONNECTER
1621	3-603-742-01	o	DROP PROTECTION (LIGHT)
1622	3-603-744-01	o	PLATE, ORNAMENTAL(TOP)
1623	3-608-318-01	o	DROP PROTECTION (TALLY)
1624	3-616-702-01	o	BRACKET (IF)
1625	3-616-704-01	o	PLATE (BOTTOM), ORNAMENTAL
1626	3-616-705-02	o	PLATE (BOTTOM), BLIND
1627	3-616-706-01	o	PLATE (REAR), BLIND
1628	3-623-254-02	o	GUIDE, CASSETTE MOUSE
1629	3-671-150-01	o	CLAMP
1630*b	3-687-116-01	o	WASHER (4), STOPPER
1631*b	3-693-979-02	o	SHEET (S), STOPPER
1632*b	3-693-980-02	o	SHEET (L), STOPPER
1633	3-694-181-02	s	TYPE1, AROCK PRECISION +P2.6X5
1634	3-729-013-41	s	SCREW (M1.4X3.5), WASHERHEAD (+P)
1635	3-729-061-01	s	SCREW (M2) (TYPE1)
1636	3-729-072-01	s	SCREW, +K4X8
1637	3-742-011-01	s	SCREW, 1/4, 3/8 CONVERSION
1638	3-742-012-01	s	SHOE (B), CAMERA
1639	3-742-015-01	o	WEDGE (B), MOUNTING
1640	3-166-603-01	s	SCREW (2.6), +B

1-3. Hardware List

No.	Part No.	SP	Description
	7-621-260-00	s	SCREW +P2.6X16
	7-621-710-55	s	SET-SCREW, SLOT 2X6 CONE POINT
	7-621-731-08	s	SET-SCREW, HEX. 2X2.5, FLAT POINT
	7-621-732-09	s	SET-SCREW, HEX. 2X3 WP
	7-621-772-20	s	SCREW +B2X5
	7-623-208-22	s	SW 3, TYPE2
	7-623-305-07	s	LW 2, TYPE (A)
	7-624-101-04	s	STOP RING 1.2 (E TYPE)
	7-624-102-04	s	STOP RING 1.5, TYPE-E
	7-624-105-04	s	STOP RING 2.3, TYPE-E
	7-628-253-15	s	SCREW +PS2X5
	7-628-253-35	s	SCREW +PS2X8
	7-682-160-09	o	SCREW +P4X6
	7-682-562-09	s	SCREW +B4X10
	7-682-563-09	s	SCREW +B4X12
	7-682-902-01	s	SCREW +PWH2.6X4
	7-685-102-19	s	SCREW +P2X4 NON-SLIT TYPE2
	7-685-103-19	s	SCREW +P2X5 TYPE2 NON-SLIT
	7-685-133-19	s	SCREW +P2.6X6 TYPE2
	7-685-134-19	s	SCREW +P2.6X8 TYPE2 NON-SLIT
	7-685-647-79	s	SCREW +P3X10 TYPE2 NON-SLIT
	7-688-003-02	s	W3, SMALL
	7-688-004-12	s	W4, MIDDLE

1-4. Electrical Parts List

AD-155 BOARD

Ref. No. or Q'ty	Part No.	SP	Description
1pc	A-8321-610-A	o	MOUNTED CIRCUIT BOARD, AD-155
C1	1-164-156-11	s	CERAMIC, CHIP 0.1uF 25V
C2	1-162-913-11	s	CERAMIC, CHIP 8PF 50V
C3	1-162-907-11	s	CERAMIC, CHIP 2PF 50V
C4	1-104-851-11	s	TANTALUM, CHIP 10uF 20% 10V
C5	1-162-919-11	s	CERAMIC, CHIP 22PF 5% 50V
C6	1-104-913-11	s	TANTALUM, CHIP 10uF 20% 16V
C7	1-164-156-11	s	CERAMIC, CHIP 0.1uF 25V
C8	1-164-156-11	s	CERAMIC, CHIP 0.1uF 25V
C9	1-164-156-11	s	CERAMIC, CHIP 0.1uF 25V
C10	1-164-156-11	s	CERAMIC, CHIP 0.1uF 25V
C11	1-104-851-11	s	TANTALUM, CHIP 10uF 20% 10V
C12	1-164-156-11	s	CERAMIC, CHIP 0.1uF 25V
C13	1-164-156-11	s	CERAMIC, CHIP 0.1uF 25V
C14	1-104-851-11	s	TANTALUM, CHIP 10uF 20% 10V
C15	1-104-913-11	s	TANTALUM, CHIP 10uF 20% 16V
C16	1-164-156-11	s	CERAMIC, CHIP 0.1uF 25V
C17	1-164-156-11	s	CERAMIC, CHIP 0.1uF 25V
C18	1-164-156-11	s	CERAMIC, CHIP 0.1uF 25V
C19	1-164-156-11	s	CERAMIC, CHIP 0.1uF 25V
C20	1-164-156-11	s	CERAMIC, CHIP 0.1uF 25V
C21	1-162-913-11	s	CERAMIC, CHIP 8PF 50V
C22	1-162-907-11	s	CERAMIC, CHIP 2PF 50V
C23	1-104-851-11	s	TANTALUM, CHIP 10uF 20% 10V
C24	1-162-919-11	s	CERAMIC, CHIP 22PF 5% 50V
C25	1-104-913-11	s	TANTALUM, CHIP 10uF 20% 16V
C26	1-164-156-11	s	CERAMIC, CHIP 0.1uF 25V
C27	1-164-156-11	s	CERAMIC, CHIP 0.1uF 25V
C28	1-164-156-11	s	CERAMIC, CHIP 0.1uF 25V
C29	1-164-156-11	s	CERAMIC, CHIP 0.1uF 25V
C30	1-104-851-11	s	TANTALUM, CHIP 10uF 20% 10V
C31	1-164-156-11	s	CERAMIC, CHIP 0.1uF 25V
C32	1-164-156-11	s	CERAMIC, CHIP 0.1uF 25V
C33	1-104-851-11	s	TANTALUM, CHIP 10uF 20% 10V
C34	1-104-913-11	s	TANTALUM, CHIP 10uF 20% 16V
C35	1-164-156-11	s	CERAMIC, CHIP 0.1uF 25V
C36	1-164-156-11	s	CERAMIC, CHIP 0.1uF 25V
C37	1-115-581-11	s	TANTALUM, CHIP 100uF 20% 16
C38	1-164-156-11	s	CERAMIC, CHIP 0.1uF 25V
C39	1-164-156-11	s	CERAMIC, CHIP 0.1uF 25V
C40	1-164-156-11	s	CERAMIC, CHIP 0.1uF 25V
C41	1-162-913-11	s	CERAMIC, CHIP 8PF 50V
C42	1-162-907-11	s	CERAMIC, CHIP 2PF 50V
C43	1-104-851-11	s	TANTALUM, CHIP 10uF 20% 10V
C44	1-162-919-11	s	CERAMIC, CHIP 22PF 5% 50V
C45	1-104-913-11	s	TANTALUM, CHIP 10uF 20% 16V
C46	1-164-156-11	s	CERAMIC, CHIP 0.1uF 25V
C47	1-164-156-11	s	CERAMIC, CHIP 0.1uF 25V
C48	1-164-156-11	s	CERAMIC, CHIP 0.1uF 25V
C49	1-164-156-11	s	CERAMIC, CHIP 0.1uF 25V
C50	1-104-851-11	s	TANTALUM, CHIP 10uF 20% 10V
C51	1-164-156-11	s	CERAMIC, CHIP 0.1uF 25V
C52	1-164-156-11	s	CERAMIC, CHIP 0.1uF 25V
C53	1-104-851-11	s	TANTALUM, CHIP 10uF 20% 10V
C54	1-104-913-11	s	TANTALUM, CHIP 10uF 20% 16V
C55	1-164-156-11	s	CERAMIC, CHIP 0.1uF 25V

(AD-155 BOARD)

Ref. No. or Q'ty	Part No.	SP	Description
C56	1-164-156-11	s	CERAMIC, CHIP 0.1uF 25V
C57	1-164-156-11	s	CERAMIC, CHIP 0.1uF 25V
C58	1-104-851-11	s	TANTALUM, CHIP 10uF 20% 10V
C59	1-164-156-11	s	CERAMIC, CHIP 0.1uF 25V
C60	1-104-851-11	s	TANTALUM, CHIP 10uF 20% 10V
C61	1-104-851-11	s	TANTALUM, CHIP 10uF 20% 10V
C62	1-104-851-11	s	TANTALUM, CHIP 10uF 20% 10V
C63	1-164-156-11	s	CERAMIC, CHIP 0.1uF 25V
C64	1-164-156-11	s	CERAMIC, CHIP 0.1uF 25V
C65	1-164-156-11	s	CERAMIC, CHIP 0.1uF 25V
CN1	1-774-998-21	o	CONNECTOR, BOARD TO BOARD 20P
CN2	1-770-678-11	o	CONNECTOR, BOARD TO BOARD 50P
FL1	1-233-739-11	s	FILTER, LOW PASS
FL2	1-233-741-11	s	FILTER, LOW PASS
FL3	1-233-739-11	s	FILTER, LOW PASS
FL4	1-233-741-11	s	FILTER, LOW PASS
FL5	1-233-739-11	s	FILTER, LOW PASS
FL6	1-233-741-11	s	FILTER, LOW PASS
IC1	8-759-523-02	s	IC TC74HC4053AFT(EL)
IC2	8-759-347-09	s	IC NJU7034V-TE2
IC3	8-759-536-18	s	IC ADS805E-T2
IC4	8-759-347-09	s	IC NJU7034V-TE2
IC5	8-759-536-18	s	IC ADS805E-T2
IC6	8-759-536-18	s	IC ADS805E-T2
Q1	8-729-403-32	s	TRANSISTOR XN6534
Q2	8-729-117-32	s	TRANSISTOR 2SC4177
Q3	8-729-403-32	s	TRANSISTOR XN6534
Q4	8-729-403-29	s	TRANSISTOR XN6435
Q5	8-729-140-63	s	TRANSISTOR 2SA1611-M5M6
Q6	8-729-117-73	s	TRANSISTOR 2SC4178-F14
Q7	8-729-117-32	s	TRANSISTOR 2SC4177
Q8	8-729-403-32	s	TRANSISTOR XN6534
Q9	8-729-117-32	s	TRANSISTOR 2SC4177
Q10	8-729-403-32	s	TRANSISTOR XN6534
Q11	8-729-403-29	s	TRANSISTOR XN6435
Q12	8-729-140-63	s	TRANSISTOR 2SA1611-M5M6
Q13	8-729-117-73	s	TRANSISTOR 2SC4178-F14
Q14	8-729-403-32	s	TRANSISTOR XN6534
Q15	8-729-117-32	s	TRANSISTOR 2SC4177
Q16	8-729-403-32	s	TRANSISTOR XN6534
Q17	8-729-403-29	s	TRANSISTOR XN6435
Q18	8-729-140-63	s	TRANSISTOR 2SA1611-M5M6
Q19	8-729-117-73	s	TRANSISTOR 2SC4178-F14
Q20	8-729-028-91	s	TRANSISTOR DTA144EUA-T106
R1	1-218-668-11	s	METAL, CHIP 100 0.50% 1/16W
R2	1-218-694-11	s	METAL, CHIP 1.2K 0.50% 1/16W
R3	1-218-668-11	s	METAL, CHIP 100 0.50% 1/16W
R4	1-218-668-11	s	METAL, CHIP 100 0.50% 1/16W
R5	1-218-668-11	s	METAL, CHIP 100 0.50% 1/16W
R6	1-218-668-11	s	METAL, CHIP 100 0.50% 1/16W
R7	1-218-692-11	s	METAL, CHIP 1K 0.50% 1/16W
R8	1-218-664-11	s	METAL, CHIP 68 0.50% 1/16W
R9	1-218-694-11	s	METAL, CHIP 1.2K 0.50% 1/16W
R10	1-218-708-11	s	METAL, CHIP 4.7K 0.50% 1/16W
R11	1-218-686-11	s	METAL, CHIP 560 0.50% 1/16W
R12	1-218-668-11	s	METAL, CHIP 100 0.50% 1/16W
R13	1-218-676-11	s	METAL, CHIP 220 0.50% 1/16W

(AD-155 BOARD)

Ref. No. or Q'ty	Part No.	SP	Description
R14	1-218-700-11	s	METAL, CHIP 2.2K 0.50% 1/16W
R15	1-218-700-11	s	METAL, CHIP 2.2K 0.50% 1/16W
R16	1-218-684-11	s	METAL, CHIP 470 0.50% 1/16W
R17	1-218-684-11	s	METAL, CHIP 470 0.50% 1/16W
R18	1-218-684-11	s	METAL, CHIP 470 0.50% 1/16W
R19	1-218-652-11	s	METAL, CHIP 22 0.50% 1/16W
R20	1-218-691-11	s	METAL, CHIP 910 0.50% 1/16W
R21	1-216-864-11	s	METAL, CHIP 0 5% 1/16W
R22	1-218-683-11	s	METAL, CHIP 430 0.50% 1/16W
R23	1-218-714-11	s	METAL, CHIP 8.2K 0.50% 1/16W
R24	1-218-722-11	s	METAL, CHIP 18K 0.50% 1/16W
R25	1-218-704-11	s	METAL, CHIP 3.3K 0.50% 1/16W
R26	1-218-704-11	s	METAL, CHIP 3.3K 0.50% 1/16W
R27	1-218-704-11	s	METAL, CHIP 3.3K 0.50% 1/16W
R28	1-218-700-11	s	METAL, CHIP 2.2K 0.50% 1/16W
R29	1-218-734-11	s	METAL, CHIP 56K 5% 1/16W
R30	1-218-716-11	s	METAL, CHIP 10K 0.50% 1/16W
R31	1-218-722-11	s	METAL, CHIP 18K 0.50% 1/16W
R32	1-218-716-11	s	METAL, CHIP 10K 0.50% 1/16W
R33	1-218-644-11	s	METAL, CHIP 10 0.50% 1/16W
R34	1-218-724-11	s	METAL, CHIP 22K 5% 1/16W
R35	1-218-692-11	s	METAL, CHIP 1K 0.50% 1/16W
R36	1-218-692-11	s	METAL, CHIP 1K 0.50% 1/16W
R37	1-218-664-11	s	METAL, CHIP 68 0.50% 1/16W
R38	1-218-694-11	s	METAL, CHIP 1.2K 0.50% 1/16W
R39	1-218-708-11	s	METAL, CHIP 4.7K 0.50% 1/16W
R40	1-218-686-11	s	METAL, CHIP 560 0.50% 1/16W
R41	1-218-668-11	s	METAL, CHIP 100 0.50% 1/16W
R42	1-218-676-11	s	METAL, CHIP 220 0.50% 1/16W
R43	1-218-700-11	s	METAL, CHIP 2.2K 0.50% 1/16W
R44	1-218-700-11	s	METAL, CHIP 2.2K 0.50% 1/16W
R45	1-218-684-11	s	METAL, CHIP 470 0.50% 1/16W
R46	1-218-684-11	s	METAL, CHIP 470 0.50% 1/16W
R47	1-218-684-11	s	METAL, CHIP 470 0.50% 1/16W
R48	1-218-652-11	s	METAL, CHIP 22 0.50% 1/16W
R49	1-218-691-11	s	METAL, CHIP 910 0.50% 1/16W
R50	1-216-864-11	s	METAL, CHIP 0 5% 1/16W
R51	1-218-683-11	s	METAL, CHIP 430 0.50% 1/16W
R52	1-218-714-11	s	METAL, CHIP 8.2K 0.50% 1/16W
R53	1-218-722-11	s	METAL, CHIP 18K 0.50% 1/16W
R54	1-218-704-11	s	METAL, CHIP 3.3K 0.50% 1/16W
R55	1-218-704-11	s	METAL, CHIP 3.3K 0.50% 1/16W
R56	1-218-732-11	s	METAL, CHIP 47K 0.50% 1/16W
R57	1-218-704-11	s	METAL, CHIP 3.3K 0.50% 1/16W
R58	1-218-700-11	s	METAL, CHIP 2.2K 0.50% 1/16W
R59	1-218-734-11	s	METAL, CHIP 56K 5% 1/16W
R60	1-218-716-11	s	METAL, CHIP 10K 0.50% 1/16W
R61	1-218-722-11	s	METAL, CHIP 18K 0.50% 1/16W
R62	1-218-716-11	s	METAL, CHIP 10K 0.50% 1/16W
R63	1-218-644-11	s	METAL, CHIP 10 0.50% 1/16W
R64	1-218-692-11	s	METAL, CHIP 1K 0.50% 1/16W
R65	1-218-664-11	s	METAL, CHIP 68 0.50% 1/16W
R66	1-218-694-11	s	METAL, CHIP 1.2K 0.50% 1/16W
R67	1-218-708-11	s	METAL, CHIP 4.7K 0.50% 1/16W
R68	1-218-668-11	s	METAL, CHIP 100 0.50% 1/16W
R69	1-218-686-11	s	METAL, CHIP 560 0.50% 1/16W
R70	1-218-676-11	s	METAL, CHIP 220 0.50% 1/16W
R71	1-218-700-11	s	METAL, CHIP 2.2K 0.50% 1/16W
R72	1-218-700-11	s	METAL, CHIP 2.2K 0.50% 1/16W

(AD-155 BOARD)

Ref. No. or Q'ty	Part No.	SP	Description
R73	1-218-684-11	s	METAL, CHIP 470 0.50% 1/16W
R74	1-218-684-11	s	METAL, CHIP 470 0.50% 1/16W
R75	1-218-684-11	s	METAL, CHIP 470 0.50% 1/16W
R76	1-218-652-11	s	METAL, CHIP 22 0.50% 1/16W
R77	1-218-691-11	s	METAL, CHIP 910 0.50% 1/16W
R78	1-216-864-11	s	METAL, CHIP 0 5% 1/16W
R79	1-218-683-11	s	METAL, CHIP 430 0.50% 1/16W
R80	1-218-714-11	s	METAL, CHIP 8.2K 0.50% 1/16W
R81	1-218-722-11	s	METAL, CHIP 18K 0.50% 1/16W
R82	1-218-704-11	s	METAL, CHIP 3.3K 0.50% 1/16W
R83	1-218-704-11	s	METAL, CHIP 3.3K 0.50% 1/16W
R84	1-218-704-11	s	METAL, CHIP 3.3K 0.50% 1/16W
R85	1-218-700-11	s	METAL, CHIP 2.2K 0.50% 1/16W
R86	1-218-734-11	s	METAL, CHIP 56K 5% 1/16W
R87	1-218-716-11	s	METAL, CHIP 10K 0.50% 1/16W
R88	1-218-722-11	s	METAL, CHIP 18K 0.50% 1/16W
R89	1-218-716-11	s	METAL, CHIP 10K 0.50% 1/16W
R90	1-218-644-11	s	METAL, CHIP 10 0.50% 1/16W
R91	1-218-644-11	s	METAL, CHIP 10 0.50% 1/16W
R92	1-218-644-11	s	METAL, CHIP 10 0.50% 1/16W
R93	1-218-672-11	s	METAL, CHIP 150 0.50% 1/16W
R94	1-218-644-11	s	METAL, CHIP 10 0.50% 1/16W
R95	1-218-644-11	s	METAL, CHIP 10 0.50% 1/16W
R96	1-218-644-11	s	METAL, CHIP 10 0.50% 1/16W

AXM-21/21B BOARD

Note

*a: Serial No.10056 and higher (707 SY)
10121 and higher (709WS SY)
30006 and higher (709WS J/790WS J)
10131 and higher (790WS SY)
40156 and higher (707P)
40226 and higher (709WSP)
40401 and higher (790WSP)

*b: Serial No.10001 through 10055 (707 SY)
30001 through 30010 (707 J)
10001 through 10120 (709WS SY)
30001 through 30005 (709WS J/790WS J)
10001 through 10130 (790WS SY)
40001 through 40155 (707P)
40001 through 40225 (709WSP)
40001 through 40400 (790WSP)

Ref. No. or Q'ty	Part No.	SP	Description
1pc	A-8321-500-A	o	MOUTED CIRCUIT BOARD, AXM-21B [for J]
1pc	A-8321-461-A	o	MOUNTED CIRCUIT BOARD, AXM-21 [for SY]
1pc	4-622-069-01	s	SUPPORT, MODEM
C3	1-126-795-11	s	ELECT 10uF 20% 50V
C6	1-126-795-11	s	ELECT 10uF 20% 50V
C101	1-163-133-00	s	CERAMIC, CHIP 470PF 5% 50V
C102	1-163-133-00	s	CERAMIC, CHIP 470PF 5% 50V
C103	1-126-795-11	s	ELECT 10uF 20% 50V
C104	1-126-795-11	s	ELECT 10uF 20% 50V
C105	1-163-243-11	s	CERAMIC, CHIP 47PF 5% 50V
C106	1-163-243-11	s	CERAMIC, CHIP 47PF 5% 50V
C107	1-163-033-91	s	CERAMIC, CHIP 0.022uF 50V
C108	1-163-033-91	s	CERAMIC, CHIP 0.022uF 50V
C109	1-163-251-11	s	CERAMIC, CHIP 100PF 5% 50V [for J]
C110	1-163-251-11	s	CERAMIC, CHIP 100PF 5% 50V [for SY]
C111	1-163-251-11	s	CERAMIC, CHIP 100PF 5% 50V
C112	1-163-275-11	s	CERAMIC, CHIP 0.001uF 5% 50V
C123	1-163-033-91	s	CERAMIC, CHIP 0.022uF 50V
C124	1-163-033-91	s	CERAMIC, CHIP 0.022uF 50V
C201	1-163-133-00	s	CERAMIC, CHIP 470PF 5% 50V
C202	1-163-133-00	s	CERAMIC, CHIP 470PF 5% 50V
C203	1-126-795-11	s	ELECT 10uF 20% 50V
C204	1-126-795-11	s	ELECT 10uF 20% 50V
C205	1-163-243-11	s	CERAMIC, CHIP 47PF 5% 50V
C206	1-163-243-11	s	CERAMIC, CHIP 47PF 5% 50V
C207	1-163-033-91	s	CERAMIC, CHIP 0.022uF 50V
C208	1-163-033-91	s	CERAMIC, CHIP 0.022uF 50V
C209	1-163-251-11	s	CERAMIC, CHIP 100PF 5% 50V [for J]
C210	1-163-251-11	s	CERAMIC, CHIP 100PF 5% 50V [for SY]
C211	1-163-251-11	s	CERAMIC, CHIP 100PF 5% 50V
C212	1-163-275-11	s	CERAMIC, CHIP 0.001uF 5% 50V
C300	1-126-934-11	s	ELECT 220uF 20% 16V
C301	1-126-934-11	s	ELECT 220uF 20% 16V
C302	1-163-251-11	s	CERAMIC, CHIP 100PF 5% 50V
C303	1-126-934-11	s	ELECT 220uF 20% 16V
C304	1-126-934-11	s	ELECT 220uF 20% 16V
C305	1-163-251-11	s	CERAMIC, CHIP 100PF 5% 50V
C306	1-163-033-91	s	CERAMIC, CHIP 0.022uF 50V
C307	1-163-033-91	s	CERAMIC, CHIP 0.022uF 50V

(AXM-21/21B BOARD)

Ref. No. or Q'ty	Part No.	SP	Description
CN100*a	1-766-385-13	s	CONNECTOR, 3P-XLR TYPE (MALE) [for J]
CN100*b	1-766-385-12	s	CONNECTOR, 3P-XLR TYPE (MALE) [for J]
CN100*a	1-766-386-13	s	CONNECTOR, 3P-XLR TYPE(FEMALE) [for SY]
CN100*b	1-766-386-12	s	CONNECTOR, 3P-XLR TYPE(FEMALE) [for SY]
CN101	1-565-883-11	o	CONNECTOR 11P, MALE
CN102	1-565-876-11	o	CONNECTOR 4P, MALE
CN200*a	1-766-385-13	s	CONNECTOR, 3P-XLR TYPE (MALE) [for J]
CN200*b	1-766-385-12	s	CONNECTOR, 3P-XLR TYPE (MALE) [for J]
CN200*a	1-766-386-13	s	CONNECTOR, 3P-XLR TYPE(FEMALE) [for SY]
CN200*b	1-766-386-12	s	CONNECTOR, 3P-XLR TYPE(FEMALE) [for SY]
CN301	1-774-795-11	s	CONNECTOR, XLR (RECEPTACLE) 5P
D101	8-719-800-76	s	DIODE 1SS226
D102	8-719-800-76	s	DIODE 1SS226
D201	8-719-800-76	s	DIODE 1SS226
D202	8-719-800-76	s	DIODE 1SS226
D300	8-719-404-35	s	DIODE MA141WK
D301	8-719-024-81	s	DIODE 1SS300-TE85L
D302	8-719-404-35	s	DIODE MA141WK
D303	8-719-024-81	s	DIODE 1SS300-TE85L
FL300	1-239-895-11	s	FILTER, EMI (SMD)
FL301	1-239-895-11	s	FILTER, EMI (SMD)
FL302	1-239-895-11	s	FILTER, EMI (SMD)
FL303	1-239-895-11	s	FILTER, EMI (SMD)
IC101	8-759-982-02	s	IC RC4562DD
IC201	8-759-982-02	s	IC RC4562DD
IC300	8-759-158-99	s	IC SSM-2142P
IC301	8-759-158-99	s	IC SSM-2142P
L101	1-412-137-11	s	INDUCTOR 10uH
L102	1-412-137-11	s	INDUCTOR 10uH
L201	1-412-137-11	s	INDUCTOR 10uH
L202	1-412-137-11	s	INDUCTOR 10uH
Q3	8-729-271-31	s	TRANSISTOR 2SC2713G [for SY]
Q4	8-729-271-31	s	TRANSISTOR 2SC2713G [for SY]
Q5	8-729-209-07	s	TRANSISTOR 2SC4213-B
Q6	8-729-209-07	s	TRANSISTOR 2SC4213-B
Q7	8-729-209-07	s	TRANSISTOR 2SC4213-B
Q8	8-729-209-07	s	TRANSISTOR 2SC4213-B
R5	1-216-685-11	s	METAL, CHIP 27K 0.5% 1/10W
R6	1-216-685-11	s	METAL, CHIP 27K 0.5% 1/10W
R100	1-216-637-11	s	METAL, CHIP 270 0.5% 1/10W
R101	1-216-659-11	s	METAL, CHIP 2.2K 0.5% 1/10W
R102	1-216-659-11	s	METAL, CHIP 2.2K 0.5% 1/10W
R103	1-216-659-11	s	METAL, CHIP 2.2K 0.5% 1/10W
R104	1-216-659-11	s	METAL, CHIP 2.2K 0.5% 1/10W
R105	1-216-659-11	s	METAL, CHIP 2.2K 0.5% 1/10W
R106	1-216-659-11	s	METAL, CHIP 2.2K 0.5% 1/10W
R107	1-216-637-11	s	METAL, CHIP 270 0.5% 1/10W
R108	1-216-637-11	s	METAL, CHIP 270 0.5% 1/10W
R109	1-216-663-11	s	METAL, CHIP 3.3K 0.5% 1/10W
R110	1-216-675-11	s	METAL, CHIP 10K 0.5% 1/10W
R111	1-216-675-11	s	METAL, CHIP 10K 0.5% 1/10W
R112	1-216-642-11	s	METAL, CHIP 430 0.5% 1/10W

(AXM-21/21B BOARD)

Ref. No. or Q'ty	Part No.	SP	Description
R114	1-216-642-11	s	METAL, CHIP 430 0.5% 1/10W
R115	1-216-663-11	s	METAL, CHIP 3.3K 0.5% 1/10W
R116	1-216-663-11	s	METAL, CHIP 3.3K 0.5% 1/10W
R119	1-216-636-11	s	METAL, CHIP 240 0.5% 1/10W
R120	1-216-636-11	s	METAL, CHIP 240 0.5% 1/10W
R121	1-216-295-11	s	CONDUCTOR, CHIP 0 [for SY]
R122	1-216-295-11	s	CONDUCTOR, CHIP 0 [for SY]
R123	1-216-295-11	s	CONDUCTOR, CHIP 0 [for J]
R124	1-216-295-11	s	CONDUCTOR, CHIP 0 [for J]
R200	1-216-637-11	s	METAL, CHIP 270 0.5% 1/10W
R201	1-216-659-11	s	METAL, CHIP 2.2K 0.5% 1/10W
R202	1-216-659-11	s	METAL, CHIP 2.2K 0.5% 1/10W
R203	1-216-659-11	s	METAL, CHIP 2.2K 0.5% 1/10W
R204	1-216-659-11	s	METAL, CHIP 2.2K 0.5% 1/10W
R205	1-216-659-11	s	METAL, CHIP 2.2K 0.5% 1/10W
R206	1-216-659-11	s	METAL, CHIP 2.2K 0.5% 1/10W
R207	1-216-637-11	s	METAL, CHIP 270 0.5% 1/10W
R208	1-216-637-11	s	METAL, CHIP 270 0.5% 1/10W
R209	1-216-663-11	s	METAL, CHIP 3.3K 0.5% 1/10W
R210	1-216-675-11	s	METAL, CHIP 10K 0.5% 1/10W
R211	1-216-675-11	s	METAL, CHIP 10K 0.5% 1/10W
R212	1-216-642-11	s	METAL, CHIP 430 0.5% 1/10W
R214	1-216-642-11	s	METAL, CHIP 430 0.5% 1/10W
R215	1-216-663-11	s	METAL, CHIP 3.3K 0.5% 1/10W
R216	1-216-663-11	s	METAL, CHIP 3.3K 0.5% 1/10W
R219	1-216-636-11	s	METAL, CHIP 240 0.5% 1/10W
R220	1-216-636-11	s	METAL, CHIP 240 0.5% 1/10W
R221	1-216-295-11	s	CONDUCTOR, CHIP 0 [for SY]
R222	1-216-295-11	s	CONDUCTOR, CHIP 0 [for SY]
R223	1-216-295-11	s	CONDUCTOR, CHIP 0 [for J]
R224	1-216-295-11	s	CONDUCTOR, CHIP 0 [for J]
R300	1-216-675-11	s	METAL, CHIP 10K 0.5% 1/10W
R301	1-216-675-11	s	METAL, CHIP 10K 0.5% 1/10W
R302	1-216-295-11	s	CONDUCTOR, CHIP 0
R304	1-216-675-11	s	METAL, CHIP 10K 0.5% 1/10W
R305	1-216-675-11	s	METAL, CHIP 10K 0.5% 1/10W
R306	1-216-295-11	s	CONDUCTOR, CHIP 0
R308	1-216-651-11	s	METAL, CHIP 1K 0.5% 1/10W
R309	1-216-651-11	s	METAL, CHIP 1K 0.5% 1/10W
R310	1-216-651-11	s	METAL, CHIP 1K 0.5% 1/10W
R311	1-216-651-11	s	METAL, CHIP 1K 0.5% 1/10W
R316	1-216-295-11	s	CONDUCTOR, CHIP 0
R317	1-216-295-11	s	CONDUCTOR, CHIP 0
S101	1-572-042-11	s	SWITCH, SLIDE
S201	1-572-042-11	s	SWITCH, SLIDE

BF-74 BOARD

Ref. No. or Q'ty	Part No.	SP	Description
1pc	1-672-913-11	o	PRINTED CIRCUIT BOARD, BF-74
CN1	1-779-393-11	o	CONNECTOR, BOARD TO BOARD 100P

BI-96(B) BOARD

Ref. No. or Q'ty	Part No.	SP	Description
1pc	1-569-195-11	o	HOUSING, CONNECTOR 2P
1pc	1-562-735-11	o	HOUSING, 2P
1pc	1-563-088-11	o	CONTACT AWG#24-30
C1	1-113-992-11	s	TANTALUM, CHIP 3.3uF 20% 35V
C2	1-113-992-11	s	TANTALUM, CHIP 3.3uF 20% 35V
C3	1-113-992-11	s	TANTALUM, CHIP 3.3uF 20% 35V
C5	1-163-038-00	s	CERAMIC, CHIP 0.1uF 25V
C6	1-163-038-00	s	CERAMIC, CHIP 0.1uF 25V
C7	1-163-021-91	s	CERAMIC 0.01uF 10% 50V
C8	1-107-687-11	s	TANTALUM, CHIP 3.3uF 20% 20V
C9	1-107-687-11	s	TANTALUM, CHIP 3.3uF 20% 20V
C10	1-107-687-11	s	TANTALUM, CHIP 3.3uF 20% 20V
C11	1-113-992-11	s	TANTALUM, CHIP 3.3uF 20% 35V
C12	1-163-038-00	s	CERAMIC, CHIP 0.1uF 25V
C14	1-163-038-00	s	CERAMIC, CHIP 0.1uF 25V
C16	1-107-687-11	s	TANTALUM, CHIP 3.3uF 20% 20V
D1	8-719-800-76	s	DIODE 1SS226
D2	8-719-157-33	s	DIODE RD6.2M-B
D3	8-719-104-34	s	DIODE 1S2835
D4	8-719-104-34	s	DIODE 1S2835
D5	8-719-800-76	s	DIODE 1SS226
Q1	8-729-421-71	s	TRANSISTOR 2SK620
Q2	8-729-116-66	s	TRANSISTOR 2SK508-K53
Q3	8-729-140-47	s	TRANSISTOR 2SC3735-B34
Q4	8-729-112-65	s	TRANSISTOR 2SA1462
R2	1-218-776-11	s	METAL, CHIP 1M 0.50% 1/10W
R3	1-218-776-11	s	METAL, CHIP 1M 0.50% 1/10W
R4	1-216-295-11	s	CONDUCTOR, CHIP 0
R5	1-216-295-11	s	CONDUCTOR, CHIP 0
R6	1-216-699-11	s	METAL, CHIP 100K 0.50% 1/10W
R7	1-216-699-11	s	METAL, CHIP 100K 0.50% 1/10W
R8	1-216-690-11	s	METAL, CHIP 43K 0.50% 1/10W
R9	1-216-699-11	s	METAL, CHIP 100K 0.50% 1/10W
R10	1-216-675-11	s	METAL, CHIP 10K 0.5% 1/10W
R11	1-216-648-11	s	METAL, CHIP 750 0.50% 1/10W
R12	1-216-678-11	s	METAL, CHIP 13K 0.50% 1/10W
R13	1-216-687-11	s	METAL, CHIP 33K 0.5% 1/10W
R14	1-216-627-11	s	METAL, CHIP 100 0.50% 1/10W
R15	1-216-663-11	s	METAL, CHIP 3.3K 0.5% 1/10W
R17	1-216-603-11	s	METAL, CHIP 10 0.50% 1/10W
R31	1-216-295-11	s	CONDUCTOR, CHIP 0

BI-96(G) BOARD

Ref. No. or Q'ty	Part No.	SP	Description
1pc	1-563-088-11	o	CONTACT AWG#24-30
C1	1-113-992-11	s	TANTALUM, CHIP 3.3uF 20% 35V
C2	1-113-992-11	s	TANTALUM, CHIP 3.3uF 20% 35V
C3	1-113-992-11	s	TANTALUM, CHIP 3.3uF 20% 35V
C5	1-163-038-00	s	CERAMIC, CHIP 0.1uF 25V
C6	1-163-038-00	s	CERAMIC, CHIP 0.1uF 25V
C7	1-163-021-91	s	CERAMIC 0.01uF 10% 50V
C8	1-107-687-11	s	TANTALUM, CHIP 3.3uF 20% 20V
C9	1-107-687-11	s	TANTALUM, CHIP 3.3uF 20% 20V
C10	1-107-687-11	s	TANTALUM, CHIP 3.3uF 20% 20V
C11	1-113-992-11	s	TANTALUM, CHIP 3.3uF 20% 35V
C12	1-163-038-00	s	CERAMIC, CHIP 0.1uF 25V
C13	1-113-985-11	s	TANTALUM, CHIP 10uF 20% 20V
C14	1-163-038-00	s	CERAMIC, CHIP 0.1uF 25V
C16	1-107-687-11	s	TANTALUM, CHIP 3.3uF 20% 20V
CN2	1-562-735-11	o	HOUSING, 2P
D1	8-719-800-76	s	DIODE 1SS226
D2	8-719-157-33	s	DIODE RD6.2M-B
D3	8-719-104-34	s	DIODE 1S2835
D4	8-719-104-34	s	DIODE 1S2835
D5	8-719-800-76	s	DIODE 1SS226
IC1	8-759-075-53	s	IC LM35DM
Q1	8-729-421-71	s	TRANSISTOR 2SK620
Q2	8-729-116-66	s	TRANSISTOR 2SK508-K53
Q3	8-729-140-47	s	TRANSISTOR 2SC3735-B34
Q4	8-729-112-65	s	TRANSISTOR 2SA1462
R2	1-218-776-11	s	METAL, CHIP 1M 0.50% 1/10W
R3	1-218-776-11	s	METAL, CHIP 1M 0.50% 1/10W
R4	1-216-295-11	s	CONDUCTOR, CHIP 0
R5	1-216-295-11	s	CONDUCTOR, CHIP 0
R6	1-216-699-11	s	METAL, CHIP 100K 0.50% 1/10W
R7	1-216-699-11	s	METAL, CHIP 100K 0.50% 1/10W
R8	1-216-690-11	s	METAL, CHIP 43K 0.50% 1/10W
R9	1-216-699-11	s	METAL, CHIP 100K 0.50% 1/10W
R10	1-216-675-11	s	METAL, CHIP 10K 0.5% 1/10W
R11	1-216-648-11	s	METAL, CHIP 750 0.50% 1/10W
R12	1-216-678-11	s	METAL, CHIP 13K 0.50% 1/10W
R13	1-216-687-11	s	METAL, CHIP 33K 0.5% 1/10W
R14	1-216-627-11	s	METAL, CHIP 100 0.50% 1/10W
R15	1-216-663-11	s	METAL, CHIP 3.3K 0.5% 1/10W
R16	1-216-624-11	s	METAL, CHIP 75 0.50% 1/10W
R17	1-216-603-11	s	METAL, CHIP 10 0.50% 1/10W
R31	1-216-295-11	s	CONDUCTOR, CHIP 0

BI-96(R) BOARD

Ref. No. or Q'ty	Part No.	SP	Description
1pc	1-569-195-11	o	HOUSING, CONNECTOR 2P
1pc	1-562-735-11	o	HOUSING, 2P
1pc	1-563-088-11	o	CONTACT AWG#24-30
C1	1-113-992-11	s	TANTALUM, CHIP 3.3uF 20% 35V
C2	1-113-992-11	s	TANTALUM, CHIP 3.3uF 20% 35V
C3	1-113-992-11	s	TANTALUM, CHIP 3.3uF 20% 35V
C5	1-163-038-00	s	CERAMIC, CHIP 0.1uF 25V
C6	1-163-038-00	s	CERAMIC, CHIP 0.1uF 25V
C7	1-163-021-91	s	CERAMIC 0.01uF 10% 50V
C8	1-107-687-11	s	TANTALUM, CHIP 3.3uF 20% 20V
C9	1-107-687-11	s	TANTALUM, CHIP 3.3uF 20% 20V
C10	1-107-687-11	s	TANTALUM, CHIP 3.3uF 20% 20V
C11	1-113-992-11	s	TANTALUM, CHIP 3.3uF 20% 35V
C12	1-163-038-00	s	CERAMIC, CHIP 0.1uF 25V
C14	1-163-038-00	s	CERAMIC, CHIP 0.1uF 25V
C16	1-107-687-11	s	TANTALUM, CHIP 3.3uF 20% 20V
D1	8-719-800-76	s	DIODE 1SS226
D2	8-719-157-33	s	DIODE RD6.2M-B
D3	8-719-104-34	s	DIODE 1S2835
D4	8-719-104-34	s	DIODE 1S2835
D5	8-719-800-76	s	DIODE 1SS226
Q1	8-729-421-71	s	TRANSISTOR 2SK620
Q2	8-729-116-66	s	TRANSISTOR 2SK508-K53
Q3	8-729-140-47	s	TRANSISTOR 2SC3735-B34
Q4	8-729-112-65	s	TRANSISTOR 2SA1462
R2	1-218-776-11	s	METAL, CHIP 1M 0.50% 1/10W
R3	1-218-776-11	s	METAL, CHIP 1M 0.50% 1/10W
R4	1-216-295-11	s	CONDUCTOR, CHIP 0
R5	1-216-295-11	s	CONDUCTOR, CHIP 0
R6	1-216-699-11	s	METAL, CHIP 100K 0.50% 1/10W
R7	1-216-699-11	s	METAL, CHIP 100K 0.50% 1/10W
R8	1-216-690-11	s	METAL, CHIP 43K 0.50% 1/10W
R9	1-216-699-11	s	METAL, CHIP 100K 0.50% 1/10W
R10	1-216-675-11	s	METAL, CHIP 10K 0.5% 1/10W
R11	1-216-648-11	s	METAL, CHIP 750 0.50% 1/10W
R12	1-216-678-11	s	METAL, CHIP 13K 0.50% 1/10W
R13	1-216-687-11	s	METAL, CHIP 33K 0.5% 1/10W
R14	1-216-627-11	s	METAL, CHIP 100 0.50% 1/10W
R15	1-216-663-11	s	METAL, CHIP 3.3K 0.5% 1/10W
R17	1-216-603-11	s	METAL, CHIP 10 0.50% 1/10W
R31	1-216-295-11	s	CONDUCTOR, CHIP 0

CI-20 BOARD

Ref. No. or Q'ty	Part No.	SP	Description
2pcs	3-729-061-01	s	SCREW (M2X4.5) (TYPE 1)
CN1	1-760-394-11	o	CONNECTOR, BOARD TO BOARD 40P
CN2	1-778-535-11	o	CONNECTOR, FFC (ZIF) 45P

CI-21 BOARD

Ref. No. or Q'ty	Part No.	SP	Description
1pc	A-8321-256-A	o	MOUNTED CIRCUIT BOARD, CI-21
C1	1-107-826-91	s	CERAMIC 0.1uF 10% 16V
C2	1-107-826-91	s	CERAMIC 0.1uF 10% 16V
C3	1-107-826-91	s	CERAMIC 0.1uF 10% 16V
C4	1-107-826-91	s	CERAMIC 0.1uF 10% 16V
CN2	1-778-535-11	o	CONNECTOR, FFC (ZIF) 45P
CN3	1-779-746-21	s	CONNECTOR, BOARD TO BOARD 50P
FB1	1-543-622-11	s	FERRITE 0uH
FB2	1-543-622-11	s	FERRITE 0uH
FB3	1-543-622-11	s	FERRITE 0uH
FB4	1-543-622-11	s	FERRITE 0uH
FB5	1-543-622-11	s	FERRITE 0uH
FB6	1-543-622-11	s	FERRITE 0uH
FB7	1-543-622-11	s	FERRITE 0uH
FB8	1-543-622-11	s	FERRITE 0uH
FB9	1-543-622-11	s	FERRITE 0uH
FB10	1-543-622-11	s	FERRITE 0uH
FB11	1-543-622-11	s	FERRITE 0uH
FB12	1-543-622-11	s	FERRITE 0uH
FB13	1-543-622-11	s	FERRITE 0uH
FB14	1-543-622-11	s	FERRITE 0uH
FB15	1-543-622-11	s	FERRITE 0uH
FB16	1-543-622-11	s	FERRITE 0uH
FB17	1-543-622-11	s	FERRITE 0uH
FB18	1-543-622-11	s	FERRITE 0uH
FB19	1-543-622-11	s	FERRITE 0uH
FB20	1-543-622-11	s	FERRITE 0uH
FB21	1-543-622-11	s	FERRITE 0uH
FB22	1-543-622-11	s	FERRITE 0uH
FB23	1-543-622-11	s	FERRITE 0uH
FB24	1-543-622-11	s	FERRITE 0uH
FB25	1-543-622-11	s	FERRITE 0uH
FB26	1-543-622-11	s	FERRITE 0uH
FB27	1-543-622-11	s	FERRITE 0uH
FB28	1-543-622-11	s	FERRITE 0uH
FB29	1-543-622-11	s	FERRITE 0uH
FB30	1-543-622-11	s	FERRITE 0uH
FB31	1-543-622-11	s	FERRITE 0uH
FB32	1-543-622-11	s	FERRITE 0uH
FB33	1-543-622-11	s	FERRITE 0uH
FB34	1-543-622-11	s	FERRITE 0uH
FB35	1-543-622-11	s	FERRITE 0uH
FB37	1-543-622-11	s	FERRITE 0uH
IC1	8-759-524-28	s	IC TC74VHC245FT(EL)
IC2	8-759-524-28	s	IC TC74VHC245FT(EL)
IC3	8-759-524-28	s	IC TC74VHC245FT(EL)
IC4	8-759-524-28	s	IC TC74VHC245FT(EL)
L1	1-412-174-11	s	INDUCTOR 1uH
R2	1-218-752-11	s	METAL, CHIP 330K 0.50% 1/16W
R3	1-218-752-11	s	METAL, CHIP 330K 0.50% 1/16W
R4	1-218-752-11	s	METAL, CHIP 330K 0.50% 1/16W
R5	1-218-752-11	s	METAL, CHIP 330K 0.50% 1/16W
RB1	1-236-907-11	s	RESISTOR BLOCK, CHIP 100KX4
RB2	1-236-907-11	s	RESISTOR BLOCK, CHIP 100KX4
RB3	1-236-907-11	s	RESISTOR BLOCK, CHIP 100KX4
RB4	1-236-907-11	s	RESISTOR BLOCK, CHIP 100KX4

(CI-21 BOARD)

Ref. No. or Q'ty	Part No.	SP	Description
RB5	1-236-907-11	s	RESISTOR BLOCK, CHIP 100KX4
RB6	1-236-907-11	s	RESISTOR BLOCK, CHIP 100KX4
RB7	1-236-907-11	s	RESISTOR BLOCK, CHIP 100KX4

CN-1183 BOARD

Ref. No. or Q'ty	Part No.	SP	Description
C1	1-104-823-11	s	TANTALUM, CHIP 47uF 20% 16V
C2	1-104-823-11	s	TANTALUM, CHIP 47uF 20% 16V
C3	1-164-156-11	s	CERAMIC, CHIP 0.1uF 25V
C4	1-164-156-11	s	CERAMIC, CHIP 0.1uF 25V
C5	1-126-936-11	s	ELECT 3300uF 20% 16V
CN1	1-770-678-11	o	CONNECTOR, BOARD TO BOARD 50P
CN2	1-695-950-21	o	CONNECTER, FPC (ZIF) 21P
CN3	1-695-950-21	o	CONNECTER, FPC (ZIF) 21P
CN4	1-695-950-21	o	CONNECTER, FPC (ZIF) 21P
D1	8-719-800-76	s	DIODE 1SS226
D2	8-719-800-76	s	DIODE 1SS226
D3	8-719-800-76	s	DIODE 1SS226
D4	8-719-800-76	s	DIODE 1SS226
D5	8-719-800-76	s	DIODE 1SS226
D6	8-719-800-76	s	DIODE 1SS226
IC1	8-759-242-51	s	IC TC74AC86F
IC2	8-759-242-51	s	IC TC74AC86F
R2	1-216-791-11	s	RESISTOR, CHIP 3.3 1/16W 1608
R3	1-218-644-11	s	METAL, CHIP 10 0.50% 1/16W
R4	1-216-791-11	s	RESISTOR, CHIP 3.3 1/16W 1608
R6	1-216-791-11	s	RESISTOR, CHIP 3.3 1/16W 1608
R8	1-216-791-11	s	RESISTOR, CHIP 3.3 1/16W 1608
R10	1-216-791-11	s	RESISTOR, CHIP 3.3 1/16W 1608
R12	1-216-791-11	s	RESISTOR, CHIP 3.3 1/16W 1608
R14	1-216-864-11	s	METAL, CHIP 0 5% 1/16W
R37	1-216-864-11	s	METAL, CHIP 0 5% 1/16W
R38	1-216-864-11	s	METAL, CHIP 0 5% 1/16W
R39	1-216-864-11	s	METAL, CHIP 0 5% 1/16W

CN-1573 BOARD (for DVW-707/707P)

Ref. No. or Q'ty	Part No.	SP	Description
1pc	A-8321-733-A	o	MOUNTED CIRCUIT BOARD, CN-1573

CNB-11/11B BOARD

Note
*c: Serial No.30011 and higher (707 J/709WS J/790WS J)

Ref. No. or Q'ty	Part No.	SP	Description
1pc	A-8321-499-A	o	MOUTED CIRCUIT BOARD, CNB-11B [for J]
1pc	A-8321-460-A	o	MOUNTED CIRCUIT BOARD, CNB-11 [for SY]
1pc	3-616-676-01	o	FINGER,SHIELD(CNB)
1pc	3-616-727-01	o	SHEET,CNB INSULATING
C1	1-128-548-11	s	ELECT 4700uF 20% 25V
C2	1-128-548-11	s	ELECT 4700uF 20% 25V
C3	1-163-021-91	s	CERAMIC 0.01uF 10% 50V
C301	1-164-227-11	s	CERAMIC, CHIP 0.022uF 10% 25V
C302	1-164-227-11	s	CERAMIC, CHIP 0.022uF 10% 25V
C303	1-104-913-11	s	TANTALUM, CHIP 10uF 20% 16V
C304	1-104-913-11	s	TANTALUM, CHIP 10uF 20% 16V
C305	1-164-227-11	s	CERAMIC, CHIP 0.022uF 10% 25V
C306	1-164-227-11	s	CERAMIC, CHIP 0.022uF 10% 25V
C307	1-135-177-21	s	TANTALUM, CHIP 1uF 10% 25V
C309	1-113-994-11	s	TANTALUM, CHIP 6.8uF 20% 16V
C310	1-104-913-11	s	TANTALUM, CHIP 10uF 20% 16V
C311	1-126-390-11	s	ELECT, CHIP 22uF 20% 6.3V
C319	1-104-913-11	s	TANTALUM, CHIP 10uF 20% 16V
C320	1-126-390-11	s	ELECT, CHIP 22uF 20% 6.3V
C401	1-164-227-11	s	CERAMIC, CHIP 0.022uF 10% 25V
CB1	⚠ 1-532-525-00	s	BREAKER, CIRCUIT 6.3A 125V
CN35	1-691-591-11	o	PIN, CONNECTOR (1.5MM) (SMD)8P
CN50	1-695-320-21	s	PIN, CONNECTOR (1.5MM)(SMD) 2P
CN101	1-778-541-11	o	CONNECTOR, BOARD TO BOARD 52P
CN102	1-564-725-11	s	CONNECTOR 9P, MALE
CN103	1-564-704-11	s	PIN HEADER, STRAIGHT 2P
CN104	1-750-933-21	o	PIN, CONNECTOR 12P
CN105	1-564-706-11	o	PIN HEADER, STRAIGHT 4P
CN106	1-779-268-21	o	PIN, CONNECTOR (1.5MM)(SMD)11P
CN107	1-573-290-21	s	PIN, CONNECTOR (1.5MM) (SMD)4P
CN108	1-766-376-11	o	PIN, CONNECTOR (1.5MM)(SMD) 9P
CN109	1-564-709-11	o	CONNECTOR 7P, MALE
CN110	1-564-705-11	s	PIN HEADER, STRAIGHT 3P
D1	8-719-023-54	s	DIODE EA60QC06-F
D2	8-719-023-54	s	DIODE EA60QC06-F
D301	8-719-029-63	s	DIODE RD4.3UH-T1
D302	8-719-029-63	s	DIODE RD4.3UH-T1
D403	8-719-941-23	s	DIODE DA204U
D404	8-719-941-23	s	DIODE DA204U
D405	8-719-941-23	s	DIODE DA204U
D406	8-719-941-23	s	DIODE DA204U
D407	8-719-941-23	s	DIODE DA204U
D408	8-719-941-23	s	DIODE DA204U
D409	8-719-941-23	s	DIODE DA204U
FL1	1-239-895-11	s	FILTER, EMI (SMD)
FL2	1-239-895-11	s	FILTER, EMI (SMD)
FL3	1-239-895-11	s	FILTER, EMI (SMD)
IC1	8-729-043-74	s	TRANSISTOR SI4435DY-T1-REVA
IC2	8-729-043-74	s	TRANSISTOR SI4435DY-T1-REVA
IC3	8-729-043-74	s	TRANSISTOR SI4435DY-T1-REVA
IC301	8-759-710-78	s	IC NJM082BM
IC302	8-759-710-88	s	IC NJM431U

(CNB-11/11B BOARD)

Ref. No. or Q'ty	Part No.	SP	Description
L301	1-410-737-31	s	INDUCTOR CHIP 0.47uH
L302	1-410-737-31	s	INDUCTOR CHIP 0.47uH
Q301	8-729-020-94	s	TRANSISTOR 2SA1314C-TE12L
Q302	8-729-808-42	s	TRANSISTOR 2SD1624-T
R1	1-218-740-11	s	METAL, CHIP 100K 0.50% 1/16W
R2	1-218-676-11	s	METAL, CHIP 220 0.50% 1/16W
R301	1-218-688-11	s	METAL, CHIP 680 0.50% 1/16W
R303	1-218-724-11	s	METAL, CHIP 22K 5% 1/16W
R304	1-218-702-11	s	METAL, CHIP 2.7K 0.50% 1/16W
R305	1-218-724-11	s	METAL, CHIP 22K 5% 1/16W
R306	1-218-732-11	s	METAL, CHIP 47K 0.50% 1/16W
R307	1-218-732-11	s	METAL, CHIP 47K 0.50% 1/16W
R401*c	1-216-295-11	s	CONDUCTOR, CHIP 0 [for J]
R402	1-218-724-11	s	METAL, CHIP 22K 5% 1/16W

CP-329 BOARD

Ref. No. or Q'ty	Part No.	SP	Description
1pc	A-8321-457-A	o	MOUNTED CIRCUIT BOARD, CP-329
1pc	3-603-713-01	o	HOLDER SWITCH
1pc	3-729-013-41	s	SCREW(M1.4X3.5),WASHERHEAD(+P)
C101	1-163-038-00	s	CERAMIC, CHIP 0.1uF 25V
C102	1-163-038-00	s	CERAMIC, CHIP 0.1uF 25V
C103	1-163-038-00	s	CERAMIC, CHIP 0.1uF 25V
C104	1-163-038-00	s	CERAMIC, CHIP 0.1uF 25V
C105	1-163-038-00	s	CERAMIC, CHIP 0.1uF 25V
C106	1-163-038-00	s	CERAMIC, CHIP 0.1uF 25V
C107	1-163-038-00	s	CERAMIC, CHIP 0.1uF 25V
CN1	1-566-761-11	o	CONNECTOR 6P, MALE
IC101	8-759-175-04	s	IC PCF8574T-T
IC102	8-759-175-04	s	IC PCF8574T-T
R13	1-216-699-11	s	METAL, CHIP 100K 0.50% 1/10W
R14	1-216-699-11	s	METAL, CHIP 100K 0.50% 1/10W
R100	1-216-651-11	s	METAL, CHIP 1K 0.5% 1/10W
R101	1-216-651-11	s	METAL, CHIP 1K 0.5% 1/10W
R102	1-216-651-11	s	METAL, CHIP 1K 0.5% 1/10W
R103	1-216-651-11	s	METAL, CHIP 1K 0.5% 1/10W
R104	1-216-651-11	s	METAL, CHIP 1K 0.5% 1/10W
R105	1-216-651-11	s	METAL, CHIP 1K 0.5% 1/10W
R106	1-216-651-11	s	METAL, CHIP 1K 0.5% 1/10W
R107	1-216-651-11	s	METAL, CHIP 1K 0.5% 1/10W
R108	1-216-651-11	s	METAL, CHIP 1K 0.5% 1/10W
R110	1-216-651-11	s	METAL, CHIP 1K 0.5% 1/10W
R111	1-216-651-11	s	METAL, CHIP 1K 0.5% 1/10W
R112	1-216-651-11	s	METAL, CHIP 1K 0.5% 1/10W
RB101	1-239-389-11	s	RESISTOR BLOCK, CHIP 47KX4
RB102	1-239-389-11	s	RESISTOR BLOCK, CHIP 47KX4
RB103	1-239-389-11	s	RESISTOR BLOCK, CHIP 47KX4
RB104	1-239-389-11	s	RESISTOR BLOCK, CHIP 47KX4
S100	1-762-001-11	s	SWITCH, TOGGLE
S101	1-762-020-11	s	SWITCH, TOGGLE
S102	1-762-000-11	s	SWITCH, TOGGLE
S103	1-762-019-11	s	SWITCH, TOGGLE
S104	1-762-000-11	s	SWITCH, TOGGLE
S105	1-762-000-11	s	SWITCH, TOGGLE
S106	1-554-088-00	s	SWITCH, TACTILE

CTL-10 BOARD

Ref. No. or Q'ty	Part No.	SP	Description
1pc	A-8263-156-A	o	MOUNTED CIRCUIT BOARD, CTL-10
C1	1-135-210-11	s	TANTALUM, CHIP 4.7uF 20% 10V
C2	1-135-210-11	s	TANTALUM, CHIP 4.7uF 20% 10V
C3	1-162-968-11	s	CERAMIC, CHIP 0.0047uF 10% 50V
C4	1-104-552-11	s	FILM 0.012uF 5% 16V
C5	1-104-563-11	s	FILM, CHIP 0.1uF 5% 16V
C6	1-104-752-11	s	TANTALUM, CHIP 33uF 20% 6.3V
C7	1-104-752-11	s	TANTALUM, CHIP 33uF 20% 6.3V
C8	1-164-816-11	s	CERAMIC, CHIP 220PF 2% 50V
C9	1-135-201-11	s	TANTALUM, CHIP 10uF 20% 6.3V
C10	1-109-898-11	s	CERAMIC 0.018uF 5% 100
C11	1-109-897-11	s	CERAMIC 0.015uF 5% 100
CN1	1-691-591-11	o	PIN, CONNECTOR (1.5MM) (SMD)8P
CN2	1-580-055-21	o	PIN, CONNECTOR (SMD) 2P
CN3	1-569-775-21	o	PIN, CONNECTOR (SMD) 5P
CN4	1-580-056-21	o	PIN, CONNECTOR (SMD) 3P
IC1	8-759-530-05	s	IC TC4053BFT(EL,N)
IC2	8-759-710-28	s	IC NJM4565M-A
IC3	8-759-260-53	s	IC LM2903PW-E05
Q1	8-729-117-32	s	TRANSISTOR 2SC4177
Q2	8-729-140-63	s	TRANSISTOR 2SA1611-M5M6
R1	1-218-708-11	s	METAL, CHIP 4.7K 0.50% 1/16W
R2	1-218-708-11	s	METAL, CHIP 4.7K 0.50% 1/16W
R3	1-216-853-11	s	METAL, CHIP 470K 5% 1/16W
R4	1-218-851-11	s	METAL, CHIP 1.5K 0.50% 1/16W
R5	1-218-704-11	s	METAL, CHIP 3.3K 0.50% 1/16W
R6	1-218-644-11	s	METAL, CHIP 10 0.50% 1/16W
R7	1-218-684-11	s	METAL, CHIP 470 0.50% 1/16W
R8	1-218-851-11	s	METAL, CHIP 1.5K 0.50% 1/16W
R9	1-218-744-11	s	METAL, CHIP 150K 0.50% 1/16W
R10	1-218-708-11	s	METAL, CHIP 4.7K 0.50% 1/16W
R11	1-218-750-11	s	METAL, CHIP 270K 0.50% 1/16W
R12	1-218-750-11	s	METAL, CHIP 270K 0.50% 1/16W
R13	1-218-716-11	s	METAL, CHIP 10K 0.50% 1/16W
R14	1-216-857-11	s	METAL, CHIP 1M 5% 1/16W
R15	1-218-708-11	s	METAL, CHIP 4.7K 0.50% 1/16W
R16	1-218-708-11	s	METAL, CHIP 4.7K 0.50% 1/16W
R17	1-216-789-11	s	METAL, CHIP 2.2 5% 1/16W
R18	1-216-789-11	s	METAL, CHIP 2.2 5% 1/16W
R19	1-216-847-11	s	METAL, CHIP 150K 5% 1/16W
R20	1-216-847-11	s	METAL, CHIP 150K 5% 1/16W

CUE-2 BOARD

Ref. No. or Q'ty	Part No.	SP	Description
1pc	A-8263-157-A	o	MOUNTED CIRCUIT BOARD, CUE-2
C1	1-135-201-11	s	TANTALUM, CHIP 10uF 20% 6.3V
C3	1-135-070-00	s	TANTALUM, CHIP 0.1uF 10% 35V
C4	1-164-004-11	s	CERAMIC, CHIP 0.1uF 10% 25V
C5	1-107-499-11	s	FILM 0.0039uF 2% 16V
C6	1-164-315-11	s	CERAMIC, CHIP 470PF 5% 50V
C7	1-135-201-11	s	TANTALUM, CHIP 10uF 20% 6.3V
C8	1-163-139-00	s	CERAMIC, CHIP 820PF 5% 50V
C9	1-109-899-11	s	CERAMIC 330uF 5% 200
C10	1-135-201-11	s	TANTALUM, CHIP 10uF 20% 6.3V
C11	1-135-076-21	s	TANTALUM, CHIP 1uF 10% 35V
C12	1-164-217-11	s	CERAMIC, CHIP 150PF 5% 50V
C13	1-104-551-11	s	FILM, CHIP 0.01uF 5% 16V
C14	1-135-202-21	s	TANTALUM, CHIP 22uF 10% 4V
C15	1-135-076-21	s	TANTALUM, CHIP 1uF 10% 35V
C16	1-162-959-11	s	CERAMIC, CHIP 330PF 5% 50V
C17	1-135-076-21	s	TANTALUM, CHIP 1uF 10% 35V
C18	1-135-145-11	s	TANTALUM, CHIP 0.47uF 10% 35V
C19	1-164-004-11	s	CERAMIC, CHIP 0.1uF 10% 25V
C20	1-135-145-11	s	TANTALUM, CHIP 0.47uF 10% 35V
C21	1-135-145-11	s	TANTALUM, CHIP 0.47uF 10% 35V
C22	1-135-210-11	s	TANTALUM, CHIP 4.7uF 20% 10V
C23	1-135-167-21	s	TANTALUM, CHIP 68uF 10% 6.3V
C24	1-135-167-21	s	TANTALUM, CHIP 68uF 10% 6.3V
C25	1-163-809-11	s	CERAMIC, CHIP 0.047uF 10% 25V
C26	1-163-275-11	s	CERAMIC, CHIP 0.001uF 5% 50V
C27	1-163-275-11	s	CERAMIC, CHIP 0.001uF 5% 50V
C28	1-162-959-11	s	CERAMIC, CHIP 330PF 5% 50V
C29	1-135-164-21	s	TANTALUM, CHIP 22uF 10% 16V
C30	1-109-900-11	s	CERAMIC 470PF 5% 200
C31	1-164-315-11	s	CERAMIC, CHIP 470PF 5% 50V
C32	1-164-227-11	s	CERAMIC, CHIP 0.022uF 10% 25V
C33	1-164-227-11	s	CERAMIC, CHIP 0.022uF 10% 25V
C34	1-162-919-11	s	CERAMIC, CHIP 22PF 5% 50V
CN1	1-760-388-11	o	CONNECTOR PIN (SMD) 9 PIN
CN2	1-695-320-21	s	PIN, CONNECTOR (1.5MM)(SMD) 2P
CN3	1-580-055-21	o	PIN, CONNECTOR (SMD) 2P
CT1	1-426-884-11	s	TRANSFORMER, BIAS OSCILLATION
CV1	1-141-365-11	s	CAP, TRIMMER 100PF
D1	8-719-941-86	s	DIODE DAN202U
D2	8-719-941-86	s	DIODE DAN202U
IC1	8-759-710-28	s	IC NJM4565M-A
IC2	8-759-710-28	s	IC NJM4565M-A
IC3	8-759-710-28	s	IC NJM4565M-A
IC4	8-759-491-46	s	IC TC74VHCT04AFT(EL)
IC5	8-759-523-78	s	IC TC74VHC00FT(EL)
L1	1-408-797-11	s	INDUCTOR, CHIP 470uH
L2	1-408-785-21	s	INDUCTOR, CHIP 47uH
LV1	1-410-853-21	s	COIL, VAR 4.5uH
Q1	8-729-140-63	s	TRANSISTOR 2SA1611-M5M6
Q2	8-729-209-07	s	TRANSISTOR 2SC4213-B
Q3	8-729-105-37	s	TRANSISTOR 2SC3360-N16
Q4	8-729-105-37	s	TRANSISTOR 2SC3360-N16
Q5	8-729-105-37	s	TRANSISTOR 2SC3360-N16

(CUE-2 BOARD)

Ref. No. or Q'ty	Part No.	SP	Description
Q6	8-729-105-37	s	TRANSISTOR 2SC3360-N16
Q7	8-729-209-07	s	TRANSISTOR 2SC4213-B
Q8	8-729-209-07	s	TRANSISTOR 2SC4213-B
Q9	8-729-105-08	s	TRANSISTOR 2SA1330
Q10	8-729-029-14	s	TRANSISTOR DTC144EUA-T106
Q11	8-729-824-34	s	TRANSISTOR 2SJ187
Q12	8-729-209-07	s	TRANSISTOR 2SC4213-B
Q13	8-729-209-07	s	TRANSISTOR 2SC4213-B
R1	1-218-708-11	s	METAL, CHIP 4.7K 0.50% 1/16W
R2	1-218-708-11	s	METAL, CHIP 4.7K 0.50% 1/16W
R4	1-218-708-11	s	METAL, CHIP 4.7K 0.50% 1/16W
R5	1-218-708-11	s	METAL, CHIP 4.7K 0.50% 1/16W
R6	1-218-724-11	s	METAL, CHIP 22K 5% 1/16W
R7	1-218-724-11	s	METAL, CHIP 22K 5% 1/16W
R9	1-218-881-11	s	METAL, CHIP 27K 0.50% 1/16W
R10	1-218-730-11	s	METAL, CHIP 39K 0.50% 1/16W
R11	1-218-748-11	s	METAL, CHIP 220K 0.50% 1/16W
R12	1-218-716-11	s	METAL, CHIP 10K 0.50% 1/16W
R13	1-218-722-11	s	METAL, CHIP 18K 0.50% 1/16W
R14	1-218-881-11	s	METAL, CHIP 27K 0.50% 1/16W
R15	1-218-724-11	s	METAL, CHIP 22K 5% 1/16W
R16	1-218-698-11	s	METAL, CHIP 1.8K 0.50% 1/16W
R17	1-216-855-11	s	METAL, CHIP 680K 5% 1/16W
R18	1-218-708-11	s	METAL, CHIP 4.7K 0.50% 1/16W
R19	1-218-740-11	s	METAL, CHIP 100K 0.50% 1/16W
R20	1-218-700-11	s	METAL, CHIP 2.2K 0.50% 1/16W
R21	1-218-700-11	s	METAL, CHIP 2.2K 0.50% 1/16W
R22	1-218-700-11	s	METAL, CHIP 2.2K 0.50% 1/16W
R23	1-218-700-11	s	METAL, CHIP 2.2K 0.50% 1/16W
R24	1-218-644-11	s	METAL, CHIP 10 0.50% 1/16W
R25	1-218-714-11	s	METAL, CHIP 8.2K 0.50% 1/16W
R26	1-218-716-11	s	METAL, CHIP 10K 0.50% 1/16W
R27	1-218-716-11	s	METAL, CHIP 10K 0.50% 1/16W
R28	1-216-850-11	s	METAL, CHIP 270K 5% 1/16W
R29	1-218-676-11	s	METAL, CHIP 220 0.50% 1/16W
R30	1-218-702-11	s	METAL, CHIP 2.7K 0.50% 1/16W
R31	1-218-716-11	s	METAL, CHIP 10K 0.50% 1/16W
R32	1-218-692-11	s	METAL, CHIP 1K 0.50% 1/16W
R33	1-218-678-11	s	METAL, CHIP 270 0.50% 1/16W
R34	1-218-708-11	s	METAL, CHIP 4.7K 0.50% 1/16W
R35	1-218-740-11	s	METAL, CHIP 100K 0.50% 1/16W
R36	1-218-740-11	s	METAL, CHIP 100K 0.50% 1/16W
R37	1-218-748-11	s	METAL, CHIP 220K 0.50% 1/16W
R38	1-218-748-11	s	METAL, CHIP 220K 0.50% 1/16W
R39	1-218-740-11	s	METAL, CHIP 100K 0.50% 1/16W
R40	1-218-724-11	s	METAL, CHIP 22K 5% 1/16W
R41	1-218-732-11	s	METAL, CHIP 47K 0.50% 1/16W
R42	1-218-708-11	s	METAL, CHIP 4.7K 0.50% 1/16W
R43	1-218-748-11	s	METAL, CHIP 220K 0.50% 1/16W
R44	1-218-732-11	s	METAL, CHIP 47K 0.50% 1/16W
R45	1-218-732-11	s	METAL, CHIP 47K 0.50% 1/16W
R46	1-216-789-11	s	METAL, CHIP 2.2 5% 1/16W
R47	1-216-789-11	s	METAL, CHIP 2.2 5% 1/16W
RV1	1-241-263-11	s	RES, ADJ, METAL 5K
RV2	1-241-266-11	s	RES, ADJ, METAL 50K
RV3	1-241-263-11	s	RES, ADJ, METAL 5K
RV4	1-241-263-11	s	RES, ADJ, METAL 5K

DC-101 BOARD

Ref. No. or Q'ty	Part No.	SP	Description
1pc	A-8321-255-A	o	MOUNTED CIRCUIT BOARD, DC-101
1pc	1-573-176-11	o	CONTACT, FEMALE AWG22-26
1pc	1-580-582-11	o	HOUSING, 12P
1pc	1-959-393-11	o	HARNESS, SUB (CNB11-BATT IN)
C1	1-115-339-11	s	CERAMIC 0.1uF 10% 50V
C2	1-115-339-11	s	CERAMIC 0.1uF 10% 50V
C3	1-115-339-11	s	CERAMIC 0.1uF 10% 50V
C4	1-115-339-11	s	CERAMIC 0.1uF 10% 50V
C5	1-115-339-11	s	CERAMIC 0.1uF 10% 50V
C6	1-115-339-11	s	CERAMIC 0.1uF 10% 50V
C7	1-115-339-11	s	CERAMIC 0.1uF 10% 50V
FL1	1-414-581-21	s	FERRITE 0uH
FL2	1-414-581-21	s	FERRITE 0uH
FL3	1-239-896-12	s	FILTER, EMI (SMD)
FL4	1-239-896-12	s	FILTER, EMI (SMD)
FL5	1-239-896-12	s	FILTER, EMI (SMD)
FL6	1-414-581-21	s	FERRITE 0uH
FL7	1-414-581-21	s	FERRITE 0uH

DC-106 BOARD

Ref. No. or Q'ty	Part No.	SP	Description
1pc	A-8321-464-A	o	MOUNTED CIRCUIT BOARD, DC-106
1pc	1-553-442-21	s	SWITCH, MICRO
9pcs	1-562-260-11	o	CONTACT, SOCKET
1pc	1-580-696-11	o	HOUSING 9P
1pc	1-959-390-11	o	HARNESS, SUB (CNB11-DC106)
1pc	7-623-505-01	s	LUG, 2
C1	1-115-339-11	s	CERAMIC 0.1uF 10% 50V
C2	1-115-339-11	s	CERAMIC 0.1uF 10% 50V
C3	1-115-339-11	s	CERAMIC 0.1uF 10% 50V
C4	1-115-339-11	s	CERAMIC 0.1uF 10% 50V
CN1	1-564-603-31	s	CONNECTOR (WITH DC SW) 4P
CN2	1-565-899-11	o	PIN, CONNECTOR 4P
E1	1-535-881-21	o	TERMINAL, TP (AUTO INSERTION)
FL1	1-414-581-21	s	FERRITE 0uH
FL2	1-414-581-21	s	FERRITE 0uH
FL3	1-414-581-21	s	FERRITE 0uH
FL4	1-414-581-21	s	FERRITE 0uH

DCP-17 BOARD

Note

*d: Serial No. 10056 and higher (707 SY)
30016 and higher (707 J/709WS J/ 790WS J)
10141 and higher (709WS SY)
10191 and higher (790WS SY)
40226 and higher (707P)
40346 and higher (709WSP)
40611 and higher (790WSP)

*e: Serial No. 10001 through 10055 (707 SY)
30001 through 30015 (707 J/709WS J/790WS J)
10001 through 10140 (709WS SY)
10001 through 10190 (790WS SY)
40001 through 40225 (707P)
40001 through 40345 (709WSP)
40001 through 40610 (790WSP)

*f: Serial No. 10001 through 10055 (707 SY)
30001 through 30010 (707 J)
10001 through 10115 (709WS SY)
30001 through 30005 (709WS J/790WS J)
10001 through 10105 (790WS SY)
40001 through 40120 (707P)
40001 through 40205 (709WSP)
40001 through 40390 (790WSP)

*g: Serial No. 10116 through 10140 (709WS SY)
30011 through 30015 (707 J)
30006 through 30015 (709WS J/790WS J)
10106 through 10160 (790WS SY)
40121 through 40215 (707P)
40206 through 40305 (709WSP)
40391 through 40590 (790WSP)

*a": Serial No.10056 and higher (707 SY)
30016 and higher (707 J)
10141 and higher (709WS SY)
30016 and higher (709WS J/790WS J)
10161 and higher (790WS SY)
40216 and higher (707P)
40306 and higher (709WSP)
40591 and higher (790WSP)

*h: Serial No. 10056 and higher (707 SY)
30011 and higher (707 J)
10116 and higher (709WS SY)
30006 and higher (709WS J/790WS J)
10106 and higher (790WS SY)
40121 and higher (707P)
40206 and higher (709WSP)
40391 and higher (790WSP)

*i: Serial No. 10001 through 10055 (707 SY)
30001 through 30010 (707 J)
10001 through 10115 (709WS SY)
30001 through 30005 (709WS J/790WS J)
10001 through 10105 (790WS SY)
40001 through 40120 (707P)
40001 through 40205 (709WSP)
40001 through 40390 (790WSP)

*j: Serial No. 10056 and higher (707 SY)
30011 and higher (707 J)
10106 and higher (709WS SY)
30006 and higher (709WS J/790WS J)
10091 and higher (790WS SY)
40121 and higher (707P)
40191 and higher (709WSP)
40336 and higher (790WSP)

*k: Serial No. 10001 through 10055 (707 SY)
30001 through 30010 (707 J)
10001 through 10105 (709WS SY)
30001 through 30005 (709WS J/790WS J)
10001 through 10090 (790WS SY)
40001 through 40120 (707P)
40001 through 40190 (709WSP)
40001 through 40335 (790WSP)

*m: Serial No. 10001 through 10055 (707 SY)
30001 through 30010 (707 J)
10001 through 10105 (709WS SY)
30001 through 30005 (709WS J/790WS J)
10001 through 10090 (790WS SY)
40001 through 40120 (707P)
40001 through 40190 (709WSP)
40001 through 40335 (790WSP)

(DCP-17 BOARD)

Ref. No. or Q'ty	Part No.	SP	Description
1pc	A-8321-481-A	o	MOUNTED CIRCUIT BOARD, DCP-17
2pcs	3-603-737-02	o	LEVER,BOARD
5pcs	3-729-061-01	s	SCREW (M2X4.5) (TYPE 1)
C1	1-162-919-11	s	CERAMIC, CHIP 22PF 5% 50V
C2	1-164-156-11	s	CERAMIC, CHIP 0.1uF 25V
C4	1-164-156-11	s	CERAMIC, CHIP 0.1uF 25V
C5	1-164-156-11	s	CERAMIC, CHIP 0.1uF 25V
C6	1-104-913-11	s	TANTALUM, CHIP 10uF 20% 16V
C7	1-164-156-11	s	CERAMIC, CHIP 0.1uF 25V
C8	1-162-919-11	s	CERAMIC, CHIP 22PF 5% 50V
C9	1-113-987-11	s	TANTALUM, CHIP 4.7uF 20% 25V
C10	1-162-919-11	s	CERAMIC, CHIP 22PF 5% 50V
C11	1-164-156-11	s	CERAMIC, CHIP 0.1uF 25V
C12	1-164-156-11	s	CERAMIC, CHIP 0.1uF 25V
C13	1-164-156-11	s	CERAMIC, CHIP 0.1uF 25V
C14	1-162-927-11	s	CERAMIC, CHIP 100PF 5% 50V
C15	1-162-923-11	s	CERAMIC, CHIP 47PF 5% 50V
C16	1-162-919-11	s	CERAMIC, CHIP 22PF 5% 50V
C18	1-164-156-11	s	CERAMIC, CHIP 0.1uF 25V
C19	1-164-156-11	s	CERAMIC, CHIP 0.1uF 25V
C20	1-164-156-11	s	CERAMIC, CHIP 0.1uF 25V
C21	1-162-927-11	s	CERAMIC, CHIP 100PF 5% 50V
C22	1-164-156-11	s	CERAMIC, CHIP 0.1uF 25V
C23	1-164-156-11	s	CERAMIC, CHIP 0.1uF 25V
C24	1-164-156-11	s	CERAMIC, CHIP 0.1uF 25V
C25	1-164-156-11	s	CERAMIC, CHIP 0.1uF 25V
C26	1-164-156-11	s	CERAMIC, CHIP 0.1uF 25V
C27	1-164-156-11	s	CERAMIC, CHIP 0.1uF 25V
C28	1-164-156-11	s	CERAMIC, CHIP 0.1uF 25V
C29	1-104-913-11	s	TANTALUM, CHIP 10uF 20% 16V
C30	1-164-156-11	s	CERAMIC, CHIP 0.1uF 25V
C31	1-164-156-11	s	CERAMIC, CHIP 0.1uF 25V
C32	1-164-156-11	s	CERAMIC, CHIP 0.1uF 25V
C33	1-115-581-11	s	TANTALUM, CHIP 100uF 20% 16
C35	1-162-917-11	s	CERAMIC, CHIP 15PF 5% 50V
C36	1-162-917-11	s	CERAMIC, CHIP 15PF 5% 50V
C38	1-164-156-11	s	CERAMIC, CHIP 0.1uF 25V
C39	1-164-156-11	s	CERAMIC, CHIP 0.1uF 25V
C40	1-164-156-11	s	CERAMIC, CHIP 0.1uF 25V
C41	1-104-913-11	s	TANTALUM, CHIP 10uF 20% 16V
C42	1-164-156-11	s	CERAMIC, CHIP 0.1uF 25V
C43	1-104-913-11	s	TANTALUM, CHIP 10uF 20% 16V
C44	1-164-156-11	s	CERAMIC, CHIP 0.1uF 25V
C45	1-164-156-11	s	CERAMIC, CHIP 0.1uF 25V
C46	1-164-156-11	s	CERAMIC, CHIP 0.1uF 25V
C47	1-164-156-11	s	CERAMIC, CHIP 0.1uF 25V
C48	1-164-156-11	s	CERAMIC, CHIP 0.1uF 25V
C49	1-164-156-11	s	CERAMIC, CHIP 0.1uF 25V
C50	1-164-156-11	s	CERAMIC, CHIP 0.1uF 25V
C51	1-164-156-11	s	CERAMIC, CHIP 0.1uF 25V
C52	1-164-156-11	s	CERAMIC, CHIP 0.1uF 25V
C53	1-107-686-11	s	TANTALUM, CHIP 4.7uF 20% 16V
C54	1-164-156-11	s	CERAMIC, CHIP 0.1uF 25V
C55	1-107-686-11	s	TANTALUM, CHIP 4.7uF 20% 16V
C56	1-104-851-11	s	TANTALUM, CHIP 10uF 20% 10V
C58	1-164-346-11	s	CERAMIC 1uF 16V
C59	1-135-177-21	s	TANTALUM, CHIP 1uF 10% 25V
C60*d	1-115-467-11	s	CAPACITOR, CERAMIC, 0.22MF 10V
C60*e	1-164-156-11	s	CERAMIC, CHIP 0.1uF 25V

(DCP-17 BOARD)

Ref. No. or Q'ty	Part No.	SP	Description
C61	1-164-156-11	s	CERAMIC, CHIP 0.1uF 25V
C62	1-104-851-11	s	TANTALUM, CHIP 10uF 20% 10V
C63	1-162-927-11	s	CERAMIC, CHIP 100PF 5% 50V
C64	1-164-156-11	s	CERAMIC, CHIP 0.1uF 25V
C65	1-164-156-11	s	CERAMIC, CHIP 0.1uF 25V
C66	1-164-156-11	s	CERAMIC, CHIP 0.1uF 25V
C67	1-104-913-11	s	TANTALUM, CHIP 10uF 20% 16V
C78	1-164-156-11	s	CERAMIC, CHIP 0.1uF 25V
C79	1-164-156-11	s	CERAMIC, CHIP 0.1uF 25V
C80	1-164-156-11	s	CERAMIC, CHIP 0.1uF 25V
C81	1-164-156-11	s	CERAMIC, CHIP 0.1uF 25V
C82	1-164-156-11	s	CERAMIC, CHIP 0.1uF 25V
C83	1-162-964-11	s	CERAMIC, CHIP 0.001uF 10% 50V
C84	1-164-156-11	s	CERAMIC, CHIP 0.1uF 25V
C85	1-162-964-11	s	CERAMIC, CHIP 0.001uF 10% 50V
C86	1-164-156-11	s	CERAMIC, CHIP 0.1uF 25V
C87	1-162-917-11	s	CERAMIC, CHIP 15PF 5% 50V
C93	1-162-917-11	s	CERAMIC, CHIP 15PF 5% 50V
C102	1-164-156-11	s	CERAMIC, CHIP 0.1uF 25V
C103	1-164-156-11	s	CERAMIC, CHIP 0.1uF 25V
C105	1-115-581-11	s	TANTALUM, CHIP 100uF 20% 16
C109	1-164-156-11	s	CERAMIC, CHIP 0.1uF 25V
C111	1-164-156-11	s	CERAMIC, CHIP 0.1uF 25V
C112	1-164-346-11	s	CERAMIC 1uF 16V
C113	1-164-346-11	s	CERAMIC 1uF 16V
C114	1-164-346-11	s	CERAMIC 1uF 16V
C115	1-164-346-11	s	CERAMIC 1uF 16V
C116	1-164-156-11	s	CERAMIC, CHIP 0.1uF 25V
C117	1-162-919-11	s	CERAMIC, CHIP 22PF 5% 50V
C118	1-162-919-11	s	CERAMIC, CHIP 22PF 5% 50V
C123	1-162-915-11	s	CERAMIC, CHIP 10PF 50V
C124	1-164-156-11	s	CERAMIC, CHIP 0.1uF 25V
C135	1-162-917-11	s	CERAMIC, CHIP 15PF 5% 50V
C136	1-162-915-11	s	CERAMIC, CHIP 10PF 50V
C147	1-165-176-11	s	CERAMIC, CHIP 0.047uF 10% 16V
C152	1-164-156-11	s	CERAMIC, CHIP 0.1uF 25V
C155	1-164-156-11	s	CERAMIC, CHIP 0.1uF 25V
C156	1-162-927-11	s	CERAMIC, CHIP 100PF 5% 50V
C157	1-162-927-11	s	CERAMIC, CHIP 100PF 5% 50V
C158	1-164-156-11	s	CERAMIC, CHIP 0.1uF 25V
C159	1-162-927-11	s	CERAMIC, CHIP 100PF 5% 50V
C160	1-164-156-11	s	CERAMIC, CHIP 0.1uF 25V
C161	1-164-156-11	s	CERAMIC, CHIP 0.1uF 25V
C162	1-164-156-11	s	CERAMIC, CHIP 0.1uF 25V
C163	1-164-346-11	s	CERAMIC 1uF 16V
C175	1-135-149-21	s	TANTALUM, CHIP 2.2uF 10% 10V
C177	1-164-156-11	s	CERAMIC, CHIP 0.1uF 25V
C178	1-115-581-11	s	TANTALUM, CHIP 100uF 20% 16
C180	1-107-686-11	s	TANTALUM, CHIP 4.7uF 20% 16V
C181	1-164-156-11	s	CERAMIC, CHIP 0.1uF 25V
C182	1-164-346-11	s	CERAMIC 1uF 16V
C183	1-164-156-11	s	CERAMIC, CHIP 0.1uF 25V
C184	1-135-149-21	s	TANTALUM, CHIP 2.2uF 10% 10V
C185	1-113-682-11	s	TANTALUM, CHIP 33uF 20% 10V
C188	1-164-156-11	s	CERAMIC, CHIP 0.1uF 25V
C189	1-135-149-21	s	TANTALUM, CHIP 2.2uF 10% 10V
C190	1-115-581-11	s	TANTALUM, CHIP 100uF 20% 16
C191	1-115-581-11	s	TANTALUM, CHIP 100uF 20% 16
C193	1-164-156-11	s	CERAMIC, CHIP 0.1uF 25V

(DCP-17 BOARD)

Ref. No. or Q'ty	Part No.	SP	Description
C194	1-164-156-11	s	CERAMIC, CHIP 0.1uF 25V
C195	1-107-686-11	s	TANTALUM, CHIP 4.7uF 20% 16V
C196	1-115-581-11	s	TANTALUM, CHIP 100uF 20% 16
C197	1-164-156-11	s	CERAMIC, CHIP 0.1uF 25V
C199	1-115-581-11	s	TANTALUM, CHIP 100uF 20% 16
C200	1-164-156-11	s	CERAMIC, CHIP 0.1uF 25V
C201	1-165-176-11	s	CERAMIC, CHIP 0.047uF 10% 16V
C202	1-164-156-11	s	CERAMIC, CHIP 0.1uF 25V
C203	1-113-994-11	s	TANTALUM, CHIP 6.8uF 20% 16V
C204	1-162-970-11	s	CERAMIC, CHIP 0.01uF 10% 25V
C205	1-162-927-11	s	CERAMIC, CHIP 100PF 5% 50V
C219	1-162-927-11	s	CERAMIC, CHIP 100PF 5% 50V
C221	1-104-913-11	s	TANTALUM, CHIP 10uF 20% 16V
C222	1-164-156-11	s	CERAMIC, CHIP 0.1uF 25V
C228	1-164-156-11	s	CERAMIC, CHIP 0.1uF 25V
C229	1-162-970-11	s	CERAMIC, CHIP 0.01uF 10% 25V
C230	1-162-970-11	s	CERAMIC, CHIP 0.01uF 10% 25V
C231	1-164-156-11	s	CERAMIC, CHIP 0.1uF 25V
C234	1-164-156-11	s	CERAMIC, CHIP 0.1uF 25V
C237	1-164-156-11	s	CERAMIC, CHIP 0.1uF 25V
C238	1-115-581-11	s	TANTALUM, CHIP 100uF 20% 16
C239	1-164-156-11	s	CERAMIC, CHIP 0.1uF 25V
C240	1-164-156-11	s	CERAMIC, CHIP 0.1uF 25V
C241	1-164-156-11	s	CERAMIC, CHIP 0.1uF 25V
C247	1-164-156-11	s	CERAMIC, CHIP 0.1uF 25V
C248	1-164-156-11	s	CERAMIC, CHIP 0.1uF 25V
C249	1-164-156-11	s	CERAMIC, CHIP 0.1uF 25V
C259	1-164-156-11	s	CERAMIC, CHIP 0.1uF 25V
C260	1-164-156-11	s	CERAMIC, CHIP 0.1uF 25V
C261	1-164-156-11	s	CERAMIC, CHIP 0.1uF 25V
C262	1-164-156-11	s	CERAMIC, CHIP 0.1uF 25V
C263	1-164-156-11	s	CERAMIC, CHIP 0.1uF 25V
C264	1-164-156-11	s	CERAMIC, CHIP 0.1uF 25V
C265	1-115-581-11	s	TANTALUM, CHIP 100uF 20% 16
C267	1-164-156-11	s	CERAMIC, CHIP 0.1uF 25V
C268	1-164-156-11	s	CERAMIC, CHIP 0.1uF 25V
C269	1-164-156-11	s	CERAMIC, CHIP 0.1uF 25V
C295	1-164-156-11	s	CERAMIC, CHIP 0.1uF 25V
C300	1-162-922-11	s	CERAMIC, CHIP 39PF 5% 50V
C301	1-162-922-11	s	CERAMIC, CHIP 39PF 5% 50V
C315	1-162-927-11	s	CERAMIC, CHIP 100PF 5% 50V
C316	1-164-156-11	s	CERAMIC, CHIP 0.1uF 25V
C317	1-164-156-11	s	CERAMIC, CHIP 0.1uF 25V
C318	1-164-156-11	s	CERAMIC, CHIP 0.1uF 25V
C319	1-164-156-11	s	CERAMIC, CHIP 0.1uF 25V
C323	1-164-156-11	s	CERAMIC, CHIP 0.1uF 25V
C324	1-164-156-11	s	CERAMIC, CHIP 0.1uF 25V
C325	1-164-156-11	s	CERAMIC, CHIP 0.1uF 25V
C326	1-164-156-11	s	CERAMIC, CHIP 0.1uF 25V
C327	1-164-156-11	s	CERAMIC, CHIP 0.1uF 25V
C328	1-162-927-11	s	CERAMIC, CHIP 100PF 5% 50V
C329	1-107-686-11	s	TANTALUM, CHIP 4.7uF 20% 16V
C330	1-107-686-11	s	TANTALUM, CHIP 4.7uF 20% 16V
C331	1-104-851-11	s	TANTALUM, CHIP 10uF 20% 10V
C332	1-162-924-11	s	CERAMIC 56PF 5% 50V
C333	1-164-156-11	s	CERAMIC, CHIP 0.1uF 25V
C334	1-164-156-11	s	CERAMIC, CHIP 0.1uF 25V
C335	1-162-924-11	s	CERAMIC 56PF 5% 50V
C336	1-104-919-11	s	TANTALUM, CHIP 10uF 20% 25V

(DCP-17 BOARD)

Ref. No. or Q'ty	Part No.	SP	Description
C337	1-164-156-11	s	CERAMIC, CHIP 0.1uF 25V
C338	1-164-156-11	s	CERAMIC, CHIP 0.1uF 25V
C340	1-164-156-11	s	CERAMIC, CHIP 0.1uF 25V
C341	1-115-581-11	s	TANTALUM, CHIP 100uF 20% 16
C342	1-115-581-11	s	TANTALUM, CHIP 100uF 20% 16
C343	1-162-908-11	s	CERAMIC, CHIP 3PF 50V
C345	1-162-917-11	s	CERAMIC, CHIP 15PF 5% 50V
C346	1-164-156-11	s	CERAMIC, CHIP 0.1uF 25V
C348	1-164-156-11	s	CERAMIC, CHIP 0.1uF 25V
C349	1-164-156-11	s	CERAMIC, CHIP 0.1uF 25V
C354	1-115-581-11	s	TANTALUM, CHIP 100uF 20% 16
C355	1-115-581-11	s	TANTALUM, CHIP 100uF 20% 16
C356	1-164-156-11	s	CERAMIC, CHIP 0.1uF 25V
C357	1-164-156-11	s	CERAMIC, CHIP 0.1uF 25V
C358	1-164-156-11	s	CERAMIC, CHIP 0.1uF 25V
C359	1-164-156-11	s	CERAMIC, CHIP 0.1uF 25V
C360	1-164-156-11	s	CERAMIC, CHIP 0.1uF 25V
C362	1-164-156-11	s	CERAMIC, CHIP 0.1uF 25V
C363	1-164-156-11	s	CERAMIC, CHIP 0.1uF 25V
C365	1-164-156-11	s	CERAMIC, CHIP 0.1uF 25V
C403	1-164-156-11	s	CERAMIC, CHIP 0.1uF 25V
C404	1-164-156-11	s	CERAMIC, CHIP 0.1uF 25V
C407	1-164-156-11	s	CERAMIC, CHIP 0.1uF 25V
C408	1-162-964-11	s	CERAMIC, CHIP 0.001uF 10% 50V
C409	1-164-156-11	s	CERAMIC, CHIP 0.1uF 25V
C410	1-104-823-11	s	TANTALUM, CHIP 47uF 20% 16V
C411	1-104-919-11	s	TANTALUM, CHIP 10uF 20% 25V
C416	1-164-156-11	s	CERAMIC, CHIP 0.1uF 25V
C417	1-164-156-11	s	CERAMIC, CHIP 0.1uF 25V
C420	1-164-156-11	s	CERAMIC, CHIP 0.1uF 25V
C421	1-164-156-11	s	CERAMIC, CHIP 0.1uF 25V
C423	1-164-156-11	s	CERAMIC, CHIP 0.1uF 25V
C424	1-164-156-11	s	CERAMIC, CHIP 0.1uF 25V
C425	1-162-964-11	s	CERAMIC, CHIP 0.001uF 10% 50V
C426	1-164-156-11	s	CERAMIC, CHIP 0.1uF 25V
C429	1-164-156-11	s	CERAMIC, CHIP 0.1uF 25V
C430	1-162-964-11	s	CERAMIC, CHIP 0.001uF 10% 50V
C432	1-113-992-11	s	TANTALUM, CHIP 3.3uF 20% 35V
C433	1-164-156-11	s	CERAMIC, CHIP 0.1uF 25V
C434	1-162-970-11	s	CERAMIC, CHIP 0.01uF 10% 25V
C435	1-164-156-11	s	CERAMIC, CHIP 0.1uF 25V
C437	1-162-917-11	s	CERAMIC, CHIP 15PF 5% 50V
C438	1-162-917-11	s	CERAMIC, CHIP 15PF 5% 50V
C441	1-164-156-11	s	CERAMIC, CHIP 0.1uF 25V
C443	1-164-156-11	s	CERAMIC, CHIP 0.1uF 25V
C444	1-164-156-11	s	CERAMIC, CHIP 0.1uF 25V
C445	1-164-156-11	s	CERAMIC, CHIP 0.1uF 25V
C446	1-164-156-11	s	CERAMIC, CHIP 0.1uF 25V
C447	1-164-156-11	s	CERAMIC, CHIP 0.1uF 25V
C448	1-164-156-11	s	CERAMIC, CHIP 0.1uF 25V
C449	1-164-156-11	s	CERAMIC, CHIP 0.1uF 25V
C450	1-164-156-11	s	CERAMIC, CHIP 0.1uF 25V
C451	1-164-156-11	s	CERAMIC, CHIP 0.1uF 25V
C453	1-164-156-11	s	CERAMIC, CHIP 0.1uF 25V
C462	1-164-156-11	s	CERAMIC, CHIP 0.1uF 25V
C465	1-164-156-11	s	CERAMIC, CHIP 0.1uF 25V
C466	1-164-156-11	s	CERAMIC, CHIP 0.1uF 25V
C467	1-104-851-11	s	TANTALUM, CHIP 10uF 20% 10V
C471	1-164-156-11	s	CERAMIC, CHIP 0.1uF 25V

(DCP-17 BOARD)

Ref. No. or Q'ty	Part No.	SP	Description
C472	1-164-156-11	s	CERAMIC, CHIP 0.1uF 25V
C473	1-164-156-11	s	CERAMIC, CHIP 0.1uF 25V
C475	1-164-156-11	s	CERAMIC, CHIP 0.1uF 25V
C478	1-164-156-11	s	CERAMIC, CHIP 0.1uF 25V
C479	1-115-581-11	s	TANTALUM, CHIP 100uF 20% 16
C480	1-115-581-11	s	TANTALUM, CHIP 100uF 20% 16
C481	1-104-913-11	s	TANTALUM, CHIP 10uF 20% 16V
C482	1-164-156-11	s	CERAMIC, CHIP 0.1uF 25V
C483	1-162-915-11	s	CERAMIC, CHIP 10PF 50V
C484	1-164-156-11	s	CERAMIC, CHIP 0.1uF 25V
C485	1-113-991-11	s	TANTALUM, CHIP 33uF 20% 16V
C486	1-113-991-11	s	TANTALUM, CHIP 33uF 20% 16V
C487	1-162-915-11	s	CERAMIC, CHIP 10PF 50V
C488	1-164-156-11	s	CERAMIC, CHIP 0.1uF 25V
C499	1-164-156-11	s	CERAMIC, CHIP 0.1uF 25V
C500	1-164-156-11	s	CERAMIC, CHIP 0.1uF 25V
C501	1-164-156-11	s	CERAMIC, CHIP 0.1uF 25V
C502	1-164-156-11	s	CERAMIC, CHIP 0.1uF 25V
C503	1-164-156-11	s	CERAMIC, CHIP 0.1uF 25V
C506	1-164-156-11	s	CERAMIC, CHIP 0.1uF 25V
C507	1-164-156-11	s	CERAMIC, CHIP 0.1uF 25V
C508	1-162-905-11	s	CERAMIC, CHIP 1PF 50V
C509	1-164-156-11	s	CERAMIC, CHIP 0.1uF 25V
C510	1-164-156-11	s	CERAMIC, CHIP 0.1uF 25V
C511	1-162-915-11	s	CERAMIC, CHIP 10PF 50V
C532	1-104-913-11	s	TANTALUM, CHIP 10uF 20% 16V
C534	1-104-851-11	s	TANTALUM, CHIP 10uF 20% 10V
C535	1-164-156-11	s	CERAMIC, CHIP 0.1uF 25V
C536	1-164-156-11	s	CERAMIC, CHIP 0.1uF 25V
C537	1-104-851-11	s	TANTALUM, CHIP 10uF 20% 10V
C538	1-164-156-11	s	CERAMIC, CHIP 0.1uF 25V
C539	1-164-156-11	s	CERAMIC, CHIP 0.1uF 25V
C540	1-104-851-11	s	TANTALUM, CHIP 10uF 20% 10V
C541	1-164-156-11	s	CERAMIC, CHIP 0.1uF 25V
C542	1-164-156-11	s	CERAMIC, CHIP 0.1uF 25V
C543	1-104-851-11	s	TANTALUM, CHIP 10uF 20% 10V
C544	1-164-156-11	s	CERAMIC, CHIP 0.1uF 25V
C545	1-164-156-11	s	CERAMIC, CHIP 0.1uF 25V
C546	1-164-156-11	s	CERAMIC, CHIP 0.1uF 25V
C547	1-104-913-11	s	TANTALUM, CHIP 10uF 20% 16V
C548	1-164-156-11	s	CERAMIC, CHIP 0.1uF 25V
C549	1-164-156-11	s	CERAMIC, CHIP 0.1uF 25V
C550	1-104-913-11	s	TANTALUM, CHIP 10uF 20% 16V
C551	1-164-156-11	s	CERAMIC, CHIP 0.1uF 25V
C552	1-164-156-11	s	CERAMIC, CHIP 0.1uF 25V
C553	1-164-156-11	s	CERAMIC, CHIP 0.1uF 25V
C554	1-164-156-11	s	CERAMIC, CHIP 0.1uF 25V
C555	1-164-156-11	s	CERAMIC, CHIP 0.1uF 25V
C556	1-164-156-11	s	CERAMIC, CHIP 0.1uF 25V
C557	1-164-156-11	s	CERAMIC, CHIP 0.1uF 25V
C558	1-164-156-11	s	CERAMIC, CHIP 0.1uF 25V
C559	1-164-315-11	s	CERAMIC, CHIP 470PF 5% 50V
C560	1-164-230-11	s	CERAMIC 220PF 5% 50V
C561	1-164-315-11	s	CERAMIC, CHIP 470PF 5% 50V
C562	1-164-230-11	s	CERAMIC 220PF 5% 50V
C563	1-164-315-11	s	CERAMIC, CHIP 470PF 5% 50V
C564	1-164-230-11	s	CERAMIC 220PF 5% 50V
C565	1-104-913-11	s	TANTALUM, CHIP 10uF 20% 16V
C566	1-164-156-11	s	CERAMIC, CHIP 0.1uF 25V

(DCP-17 BOARD)

Ref. No. or Q'ty	Part No.	SP	Description
C567	1-135-177-21	s	TANTALUM, CHIP 1uF 10% 25V
C568	1-162-920-11	s	CERAMIC, CHIP 27PF 5% 50V
C570	1-164-156-11	s	CERAMIC, CHIP 0.1uF 25V
C571	1-164-156-11	s	CERAMIC, CHIP 0.1uF 25V
C572	1-164-156-11	s	CERAMIC, CHIP 0.1uF 25V
C573	1-135-177-21	s	TANTALUM, CHIP 1uF 10% 25V
C576	1-164-156-11	s	CERAMIC, CHIP 0.1uF 25V
C577	1-135-177-21	s	TANTALUM, CHIP 1uF 10% 25V
C591	1-104-851-11	s	TANTALUM, CHIP 10uF 20% 10V
C592	1-164-156-11	s	CERAMIC, CHIP 0.1uF 25V
C593	1-164-156-11	s	CERAMIC, CHIP 0.1uF 25V
C594	1-104-851-11	s	TANTALUM, CHIP 10uF 20% 10V
C595	1-164-156-11	s	CERAMIC, CHIP 0.1uF 25V
C596	1-104-851-11	s	TANTALUM, CHIP 10uF 20% 10V
C597	1-164-156-11	s	CERAMIC, CHIP 0.1uF 25V
C598	1-164-156-11	s	CERAMIC, CHIP 0.1uF 25V
C599	1-104-851-11	s	TANTALUM, CHIP 10uF 20% 10V
C600	1-104-851-11	s	TANTALUM, CHIP 10uF 20% 10V
C601	1-164-156-11	s	CERAMIC, CHIP 0.1uF 25V
C602	1-164-156-11	s	CERAMIC, CHIP 0.1uF 25V
C603	1-164-156-11	s	CERAMIC, CHIP 0.1uF 25V
C604	1-164-156-11	s	CERAMIC, CHIP 0.1uF 25V
C605	1-164-156-11	s	CERAMIC, CHIP 0.1uF 25V
C607	1-164-156-11	s	CERAMIC, CHIP 0.1uF 25V
C608	1-164-156-11	s	CERAMIC, CHIP 0.1uF 25V
C609	1-104-851-11	s	TANTALUM, CHIP 10uF 20% 10V
C610	1-164-156-11	s	CERAMIC, CHIP 0.1uF 25V
C611	1-104-851-11	s	TANTALUM, CHIP 10uF 20% 10V
C612	1-164-156-11	s	CERAMIC, CHIP 0.1uF 25V
C613	1-164-156-11	s	CERAMIC, CHIP 0.1uF 25V
C614	1-104-851-11	s	TANTALUM, CHIP 10uF 20% 10V
C615	1-104-851-11	s	TANTALUM, CHIP 10uF 20% 10V
C616	1-164-156-11	s	CERAMIC, CHIP 0.1uF 25V
C793	1-164-156-11	s	CERAMIC, CHIP 0.1uF 25V
C796	1-162-964-11	s	CERAMIC, CHIP 0.001uF 10% 50V
C797	1-104-563-11	s	FILM, CHIP 0.1uF 5% 16V
C798	1-104-851-11	s	TANTALUM, CHIP 10uF 20% 10V
C799	1-113-682-11	s	TANTALUM, CHIP 33uF 20% 10V
C801	1-162-959-11	s	CERAMIC, CHIP 330PF 5% 50V
C802	1-104-555-11	s	FILM, CHIP 0.022uF 5% 16V
C803	1-104-851-11	s	TANTALUM, CHIP 10uF 20% 10V
C804	1-104-851-11	s	TANTALUM, CHIP 10uF 20% 10V
C805	1-104-851-11	s	TANTALUM, CHIP 10uF 20% 10V
C806	1-104-851-11	s	TANTALUM, CHIP 10uF 20% 10V
C807	1-104-851-11	s	TANTALUM, CHIP 10uF 20% 10V
C808	1-104-851-11	s	TANTALUM, CHIP 10uF 20% 10V
C809	1-104-913-11	s	TANTALUM, CHIP 10uF 20% 16V
C810	1-164-156-11	s	CERAMIC, CHIP 0.1uF 25V
C811	1-164-156-11	s	CERAMIC, CHIP 0.1uF 25V
C812	1-164-156-11	s	CERAMIC, CHIP 0.1uF 25V
C813	1-113-682-11	s	TANTALUM, CHIP 33uF 20% 10V
C814	1-104-913-11	s	TANTALUM, CHIP 10uF 20% 16V
C815	1-135-177-21	s	TANTALUM, CHIP 1uF 10% 25V
C816	1-135-177-21	s	TANTALUM, CHIP 1uF 10% 25V
C817	1-135-177-21	s	TANTALUM, CHIP 1uF 10% 25V
C818	1-164-156-11	s	CERAMIC, CHIP 0.1uF 25V
C819	1-164-156-11	s	CERAMIC, CHIP 0.1uF 25V
C821	1-164-156-11	s	CERAMIC, CHIP 0.1uF 25V
C822	1-104-851-11	s	TANTALUM, CHIP 10uF 20% 10V

(DCP-17 BOARD)

Ref. No. or Q'ty	Part No.	SP	Description
C823	1-104-919-11	s	TANTALUM, CHIP 10uF 20% 25V
C824	1-113-987-11	s	TANTALUM, CHIP 4.7uF 20% 25V
C825	1-164-156-11	s	CERAMIC, CHIP 0.1uF 25V
C826	1-162-970-11	s	CERAMIC, CHIP 0.01uF 10% 25V
C827	1-164-156-11	s	CERAMIC, CHIP 0.1uF 25V
C828	1-164-156-11	s	CERAMIC, CHIP 0.1uF 25V
C829	1-164-156-11	s	CERAMIC, CHIP 0.1uF 25V
C830	1-164-156-11	s	CERAMIC, CHIP 0.1uF 25V
C831	1-164-156-11	s	CERAMIC, CHIP 0.1uF 25V
C832	1-104-851-11	s	TANTALUM, CHIP 10uF 20% 10V
C834	1-104-851-11	s	TANTALUM, CHIP 10uF 20% 10V
C835	1-135-149-21	s	TANTALUM, CHIP 2.2uF 10% 10V
C836	1-104-851-11	s	TANTALUM, CHIP 10uF 20% 10V
C837	1-164-156-11	s	CERAMIC, CHIP 0.1uF 25V
C838	1-162-917-11	s	CERAMIC, CHIP 15PF 5% 50V
C839	1-164-156-11	s	CERAMIC, CHIP 0.1uF 25V
CN2	1-695-453-11	s	CONNECTOR, BOARD TO BOARD 50P
CN6	1-778-006-21	o	CONNECTOR, BOARD TO BOARD 20P
CN9	1-770-677-11	o	CONNECTOR, BOARD TO BOARD 50P
CN11	1-778-006-21	o	CONNECTOR, BOARD TO BOARD 20P
CN12	1-778-552-11	o	PIN, CONNECTOR 30P
CN13	1-778-551-11	o	PIN, CONNECTOR 20P
CN14	1-770-677-11	o	CONNECTOR, BOARD TO BOARD 50P
CP1	1-767-695-21	s	OSCILLATOR, CRYSTAL
D2	8-719-029-59	s	DIODE RD3.0UH-T1
D3	8-719-029-59	s	DIODE RD3.0UH-T1
D4	8-719-029-59	s	DIODE RD3.0UH-T1
D5	8-719-029-63	s	DIODE RD4.3UH-T1
D6	8-719-017-42	s	DIODE HSM88WA
D7	8-719-404-35	s	DIODE MA141WK
D8	8-719-029-63	s	DIODE RD4.3UH-T1
D9	8-719-029-63	s	DIODE RD4.3UH-T1
D10	8-719-404-35	s	DIODE MA141WK
D11	8-719-029-59	s	DIODE RD3.0UH-T1
D13	8-719-948-48	s	DIODE HSM88AS-TL
D14	8-719-948-48	s	DIODE HSM88AS-TL
D15	8-719-820-41	s	DIODE 1SS302
D16	8-719-820-41	s	DIODE 1SS302
D40	8-719-820-41	s	DIODE 1SS302
D41	8-719-948-48	s	DIODE HSM88AS-TL
D51	8-719-820-41	s	DIODE 1SS302
D55	8-719-820-41	s	DIODE 1SS302
D56	8-719-820-41	s	DIODE 1SS302
D57	8-719-948-48	s	DIODE HSM88AS-TL
D69	8-719-029-63	s	DIODE RD4.3UH-T1
IC1	8-749-014-35	s	IC HCPL-0630-500
IC2	8-759-196-96	s	IC TC7SH08FU-TE85R
IC3	8-759-196-93	s	IC TC7SH00FU-TE85R
IC4	8-759-491-46	s	IC TC74VHCT04AFT(EL)
IC5	8-759-257-96	s	IC TC7S14FU(TE85R)
IC6	8-759-523-96	s	IC TC74VHC86FT(EL)
IC7	8-759-257-96	s	IC TC7S14FU(TE85R)
IC8	8-759-058-62	s	IC TC7S08FU(TE85R)
IC9	8-759-561-68	s	IC AM26C31CDB-E05
IC10*f	8-759-663-03	o	IC 29F040-DVW709AT10-V1.11
IC10*g	8-759-670-90	o	IC 29F040-DVW709AT10-V1.12
IC10*a″	8-759-689-46	o	IC 29F040-DVW709AT10-V1.13

(DCP-17 BOARD)

Ref. No. or Q'ty	Part No.	SP	Description
IC11*f	8-759-663-04	o	IC 29F040-DVW709AT11-V1.11
IC11*g	8-759-670-91	o	IC 29F040-DVW709AT11-V1.12
IC11*a″	8-759-689-47	o	IC 29F040-DVW709AT11-V1.13
IC12	8-759-497-31	s	IC LC35256DT-70-TLM
IC13	8-759-635-27	s	IC M62352GP
IC14	8-759-497-31	s	IC LC35256DT-70-TLM
IC15	8-759-277-99	s	IC CXD8889R
IC16	8-759-083-94	s	IC TC7W74FU
IC17	8-759-096-87	s	IC TC7WU04FU(TE12R)
IC18	8-759-271-86	s	IC TC7SH04FU
IC19	8-752-386-51	s	IC CXD3122R
IC20	8-759-524-09	s	IC TC74VHC153FT(EL)
IC21	8-759-524-09	s	IC TC74VHC153FT(EL)
IC22	8-759-523-95	s	IC TC74VHC74FT(EL)
IC23	8-759-348-79	s	IC TE7751
IC24	8-759-082-58	s	IC TC7W08FU
IC25	8-759-196-93	s	IC TC7SH00FU-TE85R
IC26	8-759-523-95	s	IC TC74VHC74FT(EL)
IC27	8-759-196-93	s	IC TC7SH00FU-TE85R
IC28	8-759-447-77	s	IC TC7WH74FU(TE12R)
IC29	8-752-386-51	s	IC CXD3122R
IC30	8-759-530-31	s	IC TC74VHC4040FT(EL)
IC31	8-759-196-96	s	IC TC7SH08FU-TE85R
IC32	8-759-196-93	s	IC TC7SH00FU-TE85R
IC33	8-759-277-63	s	IC TC7W14FU(TE12R)
IC34	8-759-066-68	s	IC REF-03GS
IC35	8-759-076-06	s	IC TL064CPW
IC36	8-759-196-97	s	IC TC7SH32FU-TE85R
IC37	8-759-485-79	s	IC TC7SET08FU(TE85R)
IC38	8-759-082-61	s	IC TC4W53FU
IC39	8-759-488-91	s	IC SN74CBT16212DGGR
IC40	8-752-375-98	s	IC CXD2315Q
IC41	8-759-083-94	s	IC TC7W74FU
IC42	8-759-058-64	s	IC TC7S32FU(TE85R)
IC43	8-759-491-46	s	IC TC74VHCT04AFT(EL)
IC44	8-759-491-46	s	IC TC74VHCT04AFT(EL)
IC45	8-759-256-90	s	IC NJU7021V-TE2
IC46	8-759-049-86	s	IC SN74HCT244APW-E05
IC47	8-759-058-58	s	IC TC7S04FU(TE85R)
IC48	8-759-523-95	s	IC TC74VHC74FT(EL)
IC49	8-759-082-59	s	IC TC7W32FU
IC50	8-759-096-87	s	IC TC7WU04FU(TE12R)
IC51	8-759-529-76	s	IC TC74VHC595FT(EL)
IC52	8-759-456-26	s	IC 74LCX541MTCX
IC53	8-759-635-27	s	IC M62352GP
IC54	8-759-196-97	s	IC TC7SH32FU-TE85R
IC55	8-759-051-48	s	IC SN74HCT541APW-E05
IC56	8-759-523-04	s	IC TC74HC4538AFT(EL)
IC57	8-759-271-86	s	IC TC7SH04FU
IC58	8-759-523-78	s	IC TC74VHC00FT(EL)
IC59	8-759-523-82	s	IC TC74VHC10FT(EL)
IC60	8-752-363-60	s	IC CXD2307R-T6
IC61	8-752-363-60	s	IC CXD2307R-T6
IC62	8-759-524-52	s	IC TC74VHC574FT(EL)
IC63	8-759-196-93	s	IC TC7SH00FU-TE85R
IC64	8-759-256-90	s	IC NJU7021V-TE2
IC65	8-759-524-51	s	IC TC74VHC573FT(EL)
IC66	8-759-196-97	s	IC TC7SH32FU-TE85R
IC67	8-759-524-10	s	IC TC74VHC157FT(EL)
IC68	8-759-058-64	s	IC TC7S32FU(TE85R)
IC69	8-759-523-95	s	IC TC74VHC74FT(EL)
IC70	8-759-196-97	s	IC TC7SH32FU-TE85R

(DCP-17 BOARD)

Ref. No. or Q'ty	Part No.	SP	Description
IC71	8-752-381-65	o	IC CXD606-101R
IC72	8-759-439-40	o	IC HD6473308RF-DVW700COMV1.00
IC73	8-759-386-26	s	IC 74LCX574MTCX
IC74	8-759-524-10	s	IC TC74VHC157FT(EL)
IC75	8-759-196-96	s	IC TC7SH08FU-TE85R
IC76	8-759-277-63	s	IC TC7W14FU(TE12R)
IC77	8-759-083-94	s	IC TC7W74FU
IC78	8-759-196-93	s	IC TC7SH00FU-TE85R
IC79	8-759-523-95	s	IC TC74VHC74FT(EL)
IC80	8-759-082-58	s	IC TC7W08FU
IC81	8-759-529-76	s	IC TC74VHC595FT(EL)
IC82	8-759-271-86	s	IC TC7SH04FU
IC83	8-759-257-96	s	IC TC7S14FU(TE85R)
IC84	8-759-082-61	s	IC TC4W53FU
IC85	8-759-082-59	s	IC TC7W32FU
IC86	8-759-075-53	s	IC LM35DM
IC87	8-759-271-86	s	IC TC7SH04FU
IC88	8-759-196-96	s	IC TC7SH08FU-TE85R
IC89	8-759-271-86	s	IC TC7SH04FU
IC90	8-759-058-62	s	IC TC7S08FU(TE85R)
IC91	8-759-523-95	s	IC TC74VHC74FT(EL)
IC92	8-759-196-93	s	IC TC7SH00FU-TE85R
IC93	8-759-159-52	s	IC NJU7024M
IC94	8-759-447-77	s	IC TC7WH74FU(TE12R)
IC95	8-759-546-74	s	IC TC7WH157FU(TE12R)
IC96	8-759-271-86	s	IC TC7SH04FU
IC97	8-759-196-96	s	IC TC7SH08FU-TE85R
IC100	8-759-523-01	s	IC TC74HC4052AFT(EL)
IC101	8-759-054-61	s	IC CLC505AJE
IC102	8-759-523-02	s	IC TC74HC4053AFT(EL)
IC103	8-759-049-60	s	IC SN74HC08APW-E05
IC104	8-759-054-61	s	IC CLC505AJE
IC105	8-759-082-61	s	IC TC4W53FU
IC106	8-759-049-60	s	IC SN74HC08APW-E05
IC107	8-759-049-96	s	IC SN74HC32APW-E05
IC108	8-759-082-58	s	IC TC7W08FU
IC122	8-759-252-59	s	IC MAX202CSE
IC123	8-759-242-78	s	IC TC7W02F
IC126	8-759-399-53	s	IC MAX703CSA-TE2
IC128	8-759-058-64	s	IC TC7S32FU(TE85R)
IC129	8-759-159-52	s	IC NJU7024M
IC130	8-759-082-61	s	IC TC4W53FU
IC131	8-759-159-52	s	IC NJU7024M
IC132	8-759-256-90	s	IC NJU7021V-TE2
IC133	8-759-059-50	s	IC MB88351PFV
IC134	8-759-296-67	s	IC HD6417032F20
IC135	8-759-149-10	s	IC UPD4702G
IC137	8-759-524-07	s	IC TC74VHC138FT(EL)
IC140	8-759-165-37	s	IC X24164SIC7000
IC148	8-759-533-95	s	IC UPD6466GS-515
IC149	8-759-082-61	s	IC TC4W53FU
IC150	8-759-082-61	s	IC TC4W53FU
IC152	8-759-571-46	s	IC STK14C88-N45I
IC153	8-759-524-50	s	IC TC74VHC541FT(EL)
IC154	8-759-524-50	s	IC TC74VHC541FT(EL)
IC157	8-759-524-50	s	IC TC74VHC541FT(EL)
IC158	8-759-490-41	s	IC TC74VHCT541AFT(EL)
IC161	8-759-154-60	s	IC UPD71055GB-10-3B4
IC162	8-759-399-51	s	IC 74LVX4245QSCX

(DCP-17 BOARD)

Ref. No. or Q'ty	Part No.	SP	Description
IC163	8-759-196-96	s	IC TC7SH08FU-TE85R
IC164	8-759-277-63	s	IC TC7W14FU(TE12R)
IC165	8-759-254-49	s	IC EL4581CS-TE2
IC166	8-759-058-58	s	IC TC7S04FU(TE85R)
IC167	8-759-082-61	s	IC TC4W53FU
IC168	8-759-058-58	s	IC TC7S04FU(TE85R)
IC181	8-759-497-31	s	IC LC35256DT-70-TLM
IC182	8-759-182-95	s	IC HD151015T
IC183	8-759-523-78	s	IC TC74VHC00FT(EL)
IC186	8-759-271-86	s	IC TC7SH04FU
IC187	8-752-363-60	s	IC CXD2307R-T6
IC189	8-759-050-50	s	IC SN74HCT04APW-E05
IC190	8-759-082-61	s	IC TC4W53FU
IC191	8-759-399-55	s	IC TL054CDB-E05
IC192	8-759-082-61	s	IC TC4W53FU
IC193	8-759-082-61	s	IC TC4W53FU
IC203	8-759-058-58	s	IC TC7S04FU(TE85R)
IC204	8-759-082-58	s	IC TC7W08FU
IC206	8-759-490-41	s	IC TC74VHCT541AFT(EL)
IC207	8-759-490-41	s	IC TC74VHCT541AFT(EL)
IC208	8-759-524-50	s	IC TC74VHC541FT(EL)
IC209	8-759-490-41	s	IC TC74VHCT541AFT(EL)
IC242	8-759-082-61	s	IC TC4W53FU
IC243	8-759-287-54	s	IC TL084CPW-E20
IC244	8-759-082-61	s	IC TC4W53FU
IC245	8-759-076-06	s	IC TL064CPW
IC248	8-759-064-36	s	IC MB88346BPFV
IC249	8-759-064-36	s	IC MB88346BPFV
IC250	8-759-064-36	s	IC MB88346BPFV
IC251	8-759-064-36	s	IC MB88346BPFV
IC252	8-759-064-36	s	IC MB88346BPFV
IC253	8-759-064-36	s	IC MB88346BPFV
IC254	8-759-076-06	s	IC TL064CPW
IC255	8-759-287-54	s	IC TL084CPW-E20
IC256	8-759-523-02	s	IC TC74HC4053AFT(EL)
IC258	8-759-058-58	s	IC TC7S04FU(TE85R)
IC259	8-759-058-54	s	IC TC7S00FU(TE85R)
IC260	8-759-173-16	s	IC TL062CPW
IC261	8-759-447-77	s	IC TC7WH74FU(TE12R)
IC262	8-759-524-19	s	IC TC74VHC164FT(EL)
IC263	8-759-196-96	s	IC TC7SH08FU-TE85R
IS10	1-540-151-21	s	SOCKET, IC
IS11	1-540-151-21	s	SOCKET, IC
L1	1-412-951-11	s	INDUCTOR 10uH
L2	1-412-951-11	s	INDUCTOR 10uH
L3	1-412-951-11	s	INDUCTOR 10uH
L4	1-410-377-31	s	INDUCTOR, CHIP 4.7uH
L5	1-412-951-11	s	INDUCTOR 10uH
L6	1-412-951-11	s	INDUCTOR 10uH
L7	1-410-373-31	s	INDUCTOR CHIP 2.2uH
L9	1-412-951-11	s	INDUCTOR 10uH
L10	1-412-951-11	s	INDUCTOR 10uH
L11	1-424-643-11	s	INDUCTOR 0uH
L12	1-424-643-11	s	INDUCTOR 0uH
L13	1-424-643-11	s	INDUCTOR 0uH
L14	1-424-643-11	s	INDUCTOR 0uH
L15	1-424-643-11	s	INDUCTOR 0uH
L16	1-424-643-11	s	INDUCTOR 0uH

(DCP-17 BOARD)

Ref. No. or Q'ty	Part No.	SP	Description
L18	1-424-643-11	s	INDUCTOR 0uH
L22	1-412-955-11	s	INDUCTOR 22uH
L23	1-412-955-11	s	INDUCTOR 22uH
L31	1-412-951-11	s	INDUCTOR 10uH
L34	1-412-951-11	s	INDUCTOR 10uH
L35	1-412-951-11	s	INDUCTOR 10uH
L36	1-412-951-11	s	INDUCTOR 10uH
L45	1-412-951-11	s	INDUCTOR 10uH
L46	1-412-951-11	s	INDUCTOR 10uH
L47	1-412-951-11	s	INDUCTOR 10uH
L48	1-412-951-11	s	INDUCTOR 10uH
Q1	8-729-403-32	s	TRANSISTOR XN6534
Q2	8-729-403-32	s	TRANSISTOR XN6534
Q3	8-729-140-63	s	TRANSISTOR 2SA1611-M5M6
Q4	8-729-117-32	s	TRANSISTOR 2SC4177
Q5	8-729-029-14	s	TRANSISTOR DTC144EUA-T106
Q6	8-729-029-14	s	TRANSISTOR DTC144EUA-T106
Q7	8-729-141-48	s	TRANSISTOR 2SB624-BV345
Q8	8-729-029-14	s	TRANSISTOR DTC144EUA-T106
Q9	8-729-028-91	s	TRANSISTOR DTA144EUA-T106
Q10	8-729-029-14	s	TRANSISTOR DTC144EUA-T106
Q11	8-729-029-14	s	TRANSISTOR DTC144EUA-T106
Q12	8-729-028-91	s	TRANSISTOR DTA144EUA-T106
Q14	8-729-029-14	s	TRANSISTOR DTC144EUA-T106
Q23	8-729-820-86	s	TRANSISTOR 2SB1121-ST
Q24	8-729-014-93	s	TRANSISTOR 2SB1440S-TX
Q25	8-729-141-75	s	TRANSISTOR 2SD596DV345
Q38	8-729-029-14	s	TRANSISTOR DTC144EUA-T106
Q47	8-729-117-32	s	TRANSISTOR 2SC4177
Q48	8-729-140-63	s	TRANSISTOR 2SA1611-M5M6
Q50	8-729-403-32	s	TRANSISTOR XN6534
Q53	8-729-122-63	s	TRANSISTOR 2SA1226
Q54	8-729-403-32	s	TRANSISTOR XN6534
Q55	8-729-403-29	s	TRANSISTOR XN6435
Q56	8-729-142-90	s	TRANSISTOR 2SK853-K5
Q59	8-729-403-29	s	TRANSISTOR XN6435
Q60	8-729-142-90	s	TRANSISTOR 2SK853-K5
Q61	8-729-117-32	s	TRANSISTOR 2SC4177
Q63	8-729-140-63	s	TRANSISTOR 2SA1611-M5M6
Q64	8-729-117-32	s	TRANSISTOR 2SC4177
Q65	8-729-403-32	s	TRANSISTOR XN6534
Q66	8-729-403-32	s	TRANSISTOR XN6534
Q67	8-729-402-19	s	TRANSISTOR XN6501
Q68	8-729-402-19	s	TRANSISTOR XN6501
Q69	8-729-140-63	s	TRANSISTOR 2SA1611-M5M6
Q71	8-729-403-29	s	TRANSISTOR XN6435
Q73	8-729-403-29	s	TRANSISTOR XN6435
Q75	8-729-117-32	s	TRANSISTOR 2SC4177
Q91	8-729-402-19	s	TRANSISTOR XN6501
Q92	8-729-117-32	s	TRANSISTOR 2SC4177
Q105	8-729-140-63	s	TRANSISTOR 2SA1611-M5M6
Q106	8-729-117-32	s	TRANSISTOR 2SC4177
Q107	8-729-140-63	s	TRANSISTOR 2SA1611-M5M6
Q108	8-729-117-32	s	TRANSISTOR 2SC4177
Q109	8-729-140-63	s	TRANSISTOR 2SA1611-M5M6
Q110	8-729-117-32	s	TRANSISTOR 2SC4177
Q197	8-729-117-32	s	TRANSISTOR 2SC4177
Q198	8-729-117-32	s	TRANSISTOR 2SC4177

(DCP-17 BOARD)

Ref. No. or Q'ty	Part No.	SP	Description
Q199	8-729-117-32	s	TRANSISTOR 2SC4177
Q200	8-729-117-32	s	TRANSISTOR 2SC4177
Q201	8-729-140-63	s	TRANSISTOR 2SA1611-M5M6
Q202	8-729-140-63	s	TRANSISTOR 2SA1611-M5M6
Q203	8-729-140-63	s	TRANSISTOR 2SA1611-M5M6
Q204	8-729-140-63	s	TRANSISTOR 2SA1611-M5M6
Q205	8-729-140-63	s	TRANSISTOR 2SA1611-M5M6
Q206	8-729-140-63	s	TRANSISTOR 2SA1611-M5M6
Q207	8-729-140-63	s	TRANSISTOR 2SA1611-M5M6
Q208	8-729-117-32	s	TRANSISTOR 2SC4177
Q209	8-729-117-32	s	TRANSISTOR 2SC4177
Q210	8-729-117-32	s	TRANSISTOR 2SC4177
Q211	8-729-141-75	s	TRANSISTOR 2SD596DV345
Q332	8-729-117-32	s	TRANSISTOR 2SC4177
Q1000	8-729-403-32	s	TRANSISTOR XN6534
Q1001	8-729-122-63	s	TRANSISTOR 2SA1226
Q1002	8-729-403-32	s	TRANSISTOR XN6534
R1	1-218-668-11	s	METAL, CHIP 100 0.50% 1/16W
R2	1-218-668-11	s	METAL, CHIP 100 0.50% 1/16W
R3	1-218-712-11	s	METAL, CHIP 6.8K 0.50% 1/16W
R4	1-218-712-11	s	METAL, CHIP 6.8K 0.50% 1/16W
R5	1-218-732-11	s	METAL, CHIP 47K 0.50% 1/16W
R6	1-218-740-11	s	METAL, CHIP 100K 0.50% 1/16W
R7	1-218-740-11	s	METAL, CHIP 100K 0.50% 1/16W
R8	1-218-740-11	s	METAL, CHIP 100K 0.50% 1/16W
R9	1-216-857-11	s	METAL, CHIP 1M 5% 1/16W
R10	1-218-644-11	s	METAL, CHIP 10 0.50% 1/16W
R11	1-218-692-11	s	METAL, CHIP 1K 0.50% 1/16W
R12	1-218-668-11	s	METAL, CHIP 100 0.50% 1/16W
R13	1-218-716-11	s	METAL, CHIP 10K 0.50% 1/16W
R14	1-218-665-11	s	METAL, CHIP 75 0.50% 1/16W
R15	1-218-692-11	s	METAL, CHIP 1K 0.50% 1/16W
R17	1-216-864-11	s	METAL, CHIP 0 5% 1/16W
R19	1-218-644-11	s	METAL, CHIP 10 0.50% 1/16W
R20	1-218-644-11	s	METAL, CHIP 10 0.50% 1/16W
R21	1-218-644-11	s	METAL, CHIP 10 0.50% 1/16W
R22	1-216-864-11	s	METAL, CHIP 0 5% 1/16W
R23	1-216-864-11	s	METAL, CHIP 0 5% 1/16W
R24	1-218-716-11	s	METAL, CHIP 10K 0.50% 1/16W
R25	1-218-704-11	s	METAL, CHIP 3.3K 0.50% 1/16W
R26	1-218-665-11	s	METAL, CHIP 75 0.50% 1/16W
R27	1-218-716-11	s	METAL, CHIP 10K 0.50% 1/16W
R28	1-218-660-91	s	METAL, CHIP 47 0.50% 1/16W
R29	1-218-740-11	s	METAL, CHIP 100K 0.50% 1/16W
R30	1-218-851-11	s	METAL, CHIP 1.5K 0.50% 1/16W
R31	1-218-692-11	s	METAL, CHIP 1K 0.50% 1/16W
R32	1-218-644-11	s	METAL, CHIP 10 0.50% 1/16W
R33	1-218-660-91	s	METAL, CHIP 47 0.50% 1/16W
R34	1-218-704-11	s	METAL, CHIP 3.3K 0.50% 1/16W
R35	1-218-692-11	s	METAL, CHIP 1K 0.50% 1/16W
R36	1-218-692-11	s	METAL, CHIP 1K 0.50% 1/16W
R37	1-218-708-11	s	METAL, CHIP 4.7K 0.50% 1/16W
R38	1-218-672-11	s	METAL, CHIP 150 0.50% 1/16W
R39	1-218-692-11	s	METAL, CHIP 1K 0.50% 1/16W
R40	1-218-644-11	s	METAL, CHIP 10 0.50% 1/16W
R41	1-218-644-11	s	METAL, CHIP 10 0.50% 1/16W
R42	1-218-740-11	s	METAL, CHIP 100K 0.50% 1/16W
R43	1-218-692-11	s	METAL, CHIP 1K 0.50% 1/16W

(DCP-17 BOARD)

Ref. No. or Q'ty	Part No.	SP	Description
R44	1-218-740-11	s	METAL, CHIP 100K 0.50% 1/16W
R45	1-218-692-11	s	METAL, CHIP 1K 0.50% 1/16W
R48	1-218-692-11	s	METAL, CHIP 1K 0.50% 1/16W
R49	1-218-692-11	s	METAL, CHIP 1K 0.50% 1/16W
R50	1-218-692-11	s	METAL, CHIP 1K 0.50% 1/16W
R51	1-218-712-11	s	METAL, CHIP 6.8K 0.50% 1/16W
R52	1-218-700-11	s	METAL, CHIP 2.2K 0.50% 1/16W
R53	1-218-718-11	s	METAL, CHIP 12K 0.50% 1/16W
R54	1-218-706-11	s	METAL, CHIP 3.9K 0.50% 1/16W
R55	1-218-716-11	s	METAL, CHIP 10K 0.50% 1/16W
R56	1-218-716-11	s	METAL, CHIP 10K 0.50% 1/16W
R57	1-218-720-11	s	METAL, CHIP 15K 0.50% 1/16W
R58	1-218-700-11	s	METAL, CHIP 2.2K 0.50% 1/16W
R59	1-218-706-11	s	METAL, CHIP 3.9K 0.50% 1/16W
R60	1-216-864-11	s	METAL, CHIP 0 5% 1/16W
R61	1-218-668-11	s	METAL, CHIP 100 0.50% 1/16W
R62	1-218-674-11	s	METAL, CHIP 180 0.50% 1/16W
R63	1-218-668-11	s	METAL, CHIP 100 0.50% 1/16W
R64	1-218-668-11	s	METAL, CHIP 100 0.50% 1/16W
R65	1-218-668-11	s	METAL, CHIP 100 0.50% 1/16W
R66	1-218-716-11	s	METAL, CHIP 10K 0.50% 1/16W
R67	1-216-789-11	s	METAL, CHIP 2.2 5% 1/16W
R68	1-218-716-11	s	METAL, CHIP 10K 0.50% 1/16W
R69	1-216-864-11	s	METAL, CHIP 0 5% 1/16W
R70*h	1-218-676-11	s	METAL, CHIP 220 0.50% 1/16W
R70*i	1-218-644-11	s	METAL, CHIP 10 0.50% 1/16W
R71	1-218-692-11	s	METAL, CHIP 1K 0.50% 1/16W
R72	1-218-730-11	s	METAL, CHIP 39K 0.50% 1/16W
R73	1-218-704-11	s	METAL, CHIP 3.3K 0.50% 1/16W
R74	1-218-740-11	s	METAL, CHIP 100K 0.50% 1/16W
R75	1-216-864-11	s	METAL, CHIP 0 5% 1/16W
R76	1-218-674-11	s	METAL, CHIP 180 0.50% 1/16W
R77	1-218-674-11	s	METAL, CHIP 180 0.50% 1/16W
R78	1-218-674-11	s	METAL, CHIP 180 0.50% 1/16W
R79	1-216-864-11	s	METAL, CHIP 0 5% 1/16W
R80	1-216-864-11	s	METAL, CHIP 0 5% 1/16W
R81	1-218-660-91	s	METAL, CHIP 47 0.50% 1/16W
R83	1-218-740-11	s	METAL, CHIP 100K 0.50% 1/16W
R84	1-216-864-11	s	METAL, CHIP 0 5% 1/16W
R85	1-218-644-11	s	METAL, CHIP 10 0.50% 1/16W
R86	1-218-740-11	s	METAL, CHIP 100K 0.50% 1/16W
R87	1-216-864-11	s	METAL, CHIP 0 5% 1/16W
R88	1-218-668-11	s	METAL, CHIP 100 0.50% 1/16W
R89	1-216-864-11	s	METAL, CHIP 0.50% 1/16W
R90	1-218-716-11	s	METAL, CHIP 10K 0.50% 1/16W
R91	1-218-700-11	s	METAL, CHIP 2.2K 0.50% 1/16W
R92	1-218-728-11	s	METAL, CHIP 33K 0.50% 1/16W
R93	1-218-700-11	s	METAL, CHIP 2.2K 0.50% 1/16W
R94	1-218-851-11	s	METAL, CHIP 1.5K 0.50% 1/16W
R95	1-218-692-11	s	METAL, CHIP 1K 0.50% 1/16W
R96	1-218-728-11	s	METAL, CHIP 33K 0.50% 1/16W
R97	1-218-692-11	s	METAL, CHIP 1K 0.50% 1/16W
R98	1-218-674-11	s	METAL, CHIP 180 0.50% 1/16W
R99	1-218-644-11	s	METAL, CHIP 10 0.50% 1/16W
R100	1-218-668-11	s	METAL, CHIP 100 0.50% 1/16W
R101	1-218-692-11	s	METAL, CHIP 1K 0.50% 1/16W
R102	1-218-676-11	s	METAL, CHIP 220 0.50% 1/16W
R103	1-218-644-11	s	METAL, CHIP 10 0.50% 1/16W
R105	1-218-668-11	s	METAL, CHIP 100 0.50% 1/16W
R106	1-218-644-11	s	METAL, CHIP 10 0.50% 1/16W

(DCP-17 BOARD)

Ref. No. or Q'ty	Part No.	SP	Description
R107	1-218-644-11	s	METAL, CHIP 10 0.50% 1/16W
R108	1-218-668-11	s	METAL, CHIP 100 0.50% 1/16W
R109	1-218-674-11	s	METAL, CHIP 180 0.50% 1/16W
R110	1-218-668-11	s	METAL, CHIP 100 0.50% 1/16W
R112	1-218-644-11	s	METAL, CHIP 10 0.50% 1/16W
R113	1-218-644-11	s	METAL, CHIP 10 0.50% 1/16W
R114	1-218-644-11	s	METAL, CHIP 10 0.50% 1/16W
R115	1-218-644-11	s	METAL, CHIP 10 0.50% 1/16W
R116	1-218-644-11	s	METAL, CHIP 10 0.50% 1/16W
R117	1-218-668-11	s	METAL, CHIP 100 0.50% 1/16W
R118	1-218-660-91	s	METAL, CHIP 47 0.50% 1/16W
R119	1-218-740-11	s	METAL, CHIP 100K 0.50% 1/16W
R121	1-218-660-91	s	METAL, CHIP 47 0.50% 1/16W
R122	1-218-668-11	s	METAL, CHIP 100 0.50% 1/16W
R123	1-218-668-11	s	METAL, CHIP 100 0.50% 1/16W
R124	1-218-730-11	s	METAL, CHIP 39K 0.50% 1/16W
R125	1-218-724-11	s	METAL, CHIP 22K 5% 1/16W
R126	1-218-668-11	s	METAL, CHIP 100 0.50% 1/16W
R128	1-218-644-11	s	METAL, CHIP 10 0.50% 1/16W
R129	1-218-644-11	s	METAL, CHIP 10 0.50% 1/16W
R130	1-216-864-11	s	METAL, CHIP 0 5% 1/16W
R132	1-216-864-11	s	METAL, CHIP 0 5% 1/16W
R133	1-218-660-91	s	METAL, CHIP 47 0.50% 1/16W
R134	1-218-644-11	s	METAL, CHIP 10 0.50% 1/16W
R135	1-218-668-11	s	METAL, CHIP 100 0.50% 1/16W
R137	1-218-644-11	s	METAL, CHIP 10 0.50% 1/16W
R138	1-216-864-11	s	METAL, CHIP 0 5% 1/16W
R139	1-218-668-11	s	METAL, CHIP 100 0.50% 1/16W
R140	1-218-692-11	s	METAL, CHIP 1K 0.50% 1/16W
R141	1-218-732-11	s	METAL, CHIP 47K 0.50% 1/16W
R142	1-218-668-11	s	METAL, CHIP 100 0.50% 1/16W
R145	1-218-674-11	s	METAL, CHIP 180 0.50% 1/16W
R146	1-216-864-11	s	METAL, CHIP 0 5% 1/16W
R147	1-218-660-91	s	METAL, CHIP 47 0.50% 1/16W
R148	1-218-740-11	s	METAL, CHIP 100K 0.50% 1/16W
R149	1-218-740-11	s	METAL, CHIP 100K 0.50% 1/16W
R150	1-218-716-11	s	METAL, CHIP 10K 0.50% 1/16W
R151	1-218-716-11	s	METAL, CHIP 10K 0.50% 1/16W
R152	1-218-720-11	s	METAL, CHIP 15K 0.50% 1/16W
R153	1-218-668-11	s	METAL, CHIP 100 0.50% 1/16W
R154	1-218-740-11	s	METAL, CHIP 100K 0.50% 1/16W
R155	1-218-740-11	s	METAL, CHIP 100K 0.50% 1/16W
R156	1-218-740-11	s	METAL, CHIP 100K 0.50% 1/16W
R157	1-218-740-11	s	METAL, CHIP 100K 0.50% 1/16W
R158	1-218-692-11	s	METAL, CHIP 1K 0.50% 1/16W
R159	1-218-692-11	s	METAL, CHIP 1K 0.50% 1/16W
R160	1-218-660-91	s	METAL, CHIP 47 0.50% 1/16W
R163	1-218-740-11	s	METAL, CHIP 100K 0.50% 1/16W
R164	1-218-720-11	s	METAL, CHIP 15K 0.50% 1/16W
R166	1-218-740-11	s	METAL, CHIP 100K 0.50% 1/16W
R168	1-218-700-11	s	METAL, CHIP 2.2K 0.50% 1/16W
R169	1-218-700-11	s	METAL, CHIP 2.2K 0.50% 1/16W
R170	1-218-724-11	s	METAL, CHIP 22K 5% 1/16W
R173	1-218-692-11	s	METAL, CHIP 1K 0.50% 1/16W
R175	1-218-722-11	s	METAL, CHIP 18K 0.50% 1/16W
R176	1-218-851-11	s	METAL, CHIP 1.5K 0.50% 1/16W
R177	1-218-724-11	s	METAL, CHIP 22K 5% 1/16W
R178	1-218-732-11	s	METAL, CHIP 47K 0.50% 1/16W
R179	1-218-732-11	s	METAL, CHIP 47K 0.50% 1/16W

(DCP-17 BOARD)

Ref. No. or Q'ty	Part No.	SP	Description
R183	1-216-864-11	s	METAL, CHIP 0 5% 1/16W
R185	1-216-864-11	s	METAL, CHIP 0 5% 1/16W
R188	1-216-864-11	s	METAL, CHIP 0 5% 1/16W
R190	1-218-660-91	s	METAL, CHIP 47 0.50% 1/16W
R191	1-218-732-11	s	METAL, CHIP 47K 0.50% 1/16W
R192	1-218-732-11	s	METAL, CHIP 47K 0.50% 1/16W
R193	1-218-732-11	s	METAL, CHIP 47K 0.50% 1/16W
R196	1-216-864-11	s	METAL, CHIP 0 5% 1/16W
R197*j	1-216-864-11	s	CONDUCTOR, CHIP 0 1/16W
R198	1-218-740-11	s	METAL, CHIP 100K 0.50% 1/16W
R199	1-218-740-11	s	METAL, CHIP 100K 0.50% 1/16W
R200	1-218-668-11	s	METAL, CHIP 100 0.50% 1/16W
R201	1-218-668-11	s	METAL, CHIP 100 0.50% 1/16W
R202	1-218-692-11	s	METAL, CHIP 1K 0.50% 1/16W
R203	1-218-668-11	s	METAL, CHIP 100 0.50% 1/16W
R204	1-218-668-11	s	METAL, CHIP 100 0.50% 1/16W
R205	1-218-706-11	s	METAL, CHIP 3.9K 0.50% 1/16W
R206	1-218-732-11	s	METAL, CHIP 47K 0.50% 1/16W
R207	1-218-668-11	s	METAL, CHIP 100 0.50% 1/16W
R208	1-218-668-11	s	METAL, CHIP 100 0.50% 1/16W
R209	1-218-740-11	s	METAL, CHIP 100K 0.50% 1/16W
R210	1-218-740-11	s	METAL, CHIP 100K 0.50% 1/16W
R211	1-218-732-11	s	METAL, CHIP 47K 0.50% 1/16W
R212	1-218-740-11	s	METAL, CHIP 100K 0.50% 1/16W
R213	1-218-692-11	s	METAL, CHIP 1K 0.50% 1/16W
R214	1-218-740-11	s	METAL, CHIP 100K 0.50% 1/16W
R215	1-218-724-11	s	METAL, CHIP 22K 5% 1/16W
R216	1-218-740-11	s	METAL, CHIP 100K 0.50% 1/16W
R217	1-218-660-91	s	METAL, CHIP 47 0.50% 1/16W
R218	1-218-660-91	s	METAL, CHIP 47 0.50% 1/16W
R219	1-216-857-11	s	METAL, CHIP 1M 5% 1/16W
R220	1-218-730-11	s	METAL, CHIP 39K 0.50% 1/16W
R221	1-218-692-11	s	METAL, CHIP 1K 0.50% 1/16W
R222	1-218-730-11	s	METAL, CHIP 39K 0.50% 1/16W
R223	1-218-730-11	s	METAL, CHIP 39K 0.50% 1/16W
R224	1-218-730-11	s	METAL, CHIP 39K 0.50% 1/16W
R225	1-218-692-11	s	METAL, CHIP 1K 0.50% 1/16W
R226	1-218-704-11	s	METAL, CHIP 3.3K 0.50% 1/16W
R227	1-218-704-11	s	METAL, CHIP 3.3K 0.50% 1/16W
R228	1-218-704-11	s	METAL, CHIP 3.3K 0.50% 1/16W
R229	1-218-724-11	s	METAL, CHIP 22K 5% 1/16W
R230	1-218-724-11	s	METAL, CHIP 22K 5% 1/16W
R231	1-218-724-11	s	METAL, CHIP 22K 5% 1/16W
R232	1-218-722-11	s	METAL, CHIP 18K 0.50% 1/16W
R233	1-218-724-11	s	METAL, CHIP 22K 5% 1/16W
R234	1-218-724-11	s	METAL, CHIP 22K 5% 1/16W
R235	1-218-720-11	s	METAL, CHIP 15K 0.50% 1/16W
R236	1-218-704-11	s	METAL, CHIP 3.3K 0.50% 1/16W
R237	1-218-704-11	s	METAL, CHIP 3.3K 0.50% 1/16W
R238	1-218-704-11	s	METAL, CHIP 3.3K 0.50% 1/16W
R239	1-218-881-11	s	METAL, CHIP 27K 0.50% 1/16W
R240	1-218-732-11	s	METAL, CHIP 47K 0.50% 1/16W
R241	1-218-668-11	s	METAL, CHIP 100 0.50% 1/16W
R242	1-218-668-11	s	METAL, CHIP 100 0.50% 1/16W
R243	1-218-881-11	s	METAL, CHIP 27K 0.50% 1/16W
R244	1-218-724-11	s	METAL, CHIP 22K 5% 1/16W
R245	1-218-644-11	s	METAL, CHIP 10 0.50% 1/16W
R246	1-218-674-11	s	METAL, CHIP 180 0.50% 1/16W
R248	1-218-660-91	s	METAL, CHIP 47 0.50% 1/16W
R249	1-218-660-91	s	METAL, CHIP 47 0.50% 1/16W

(DCP-17 BOARD)

Ref. No. or Q'ty	Part No.	SP	Description
R250	1-216-864-11	s	METAL, CHIP 0 5% 1/16W
R251	1-218-728-11	s	METAL, CHIP 33K 0.50% 1/16W
R252	1-218-720-11	s	METAL, CHIP 15K 0.50% 1/16W
R254	1-218-716-11	s	METAL, CHIP 10K 0.50% 1/16W
R255	1-218-724-11	s	METAL, CHIP 22K 5% 1/16W
R256	1-218-692-11	s	METAL, CHIP 1K 0.50% 1/16W
R257	1-218-734-11	s	METAL, CHIP 56K 5% 1/16W
R258	1-218-734-11	s	METAL, CHIP 56K 5% 1/16W
R259	1-218-716-11	s	METAL, CHIP 10K 0.50% 1/16W
R260	1-218-670-11	s	METAL, CHIP 120 0.50% 1/16W
R261	1-218-670-11	s	METAL, CHIP 120 0.50% 1/16W
R262	1-218-692-11	s	METAL, CHIP 1K 0.50% 1/16W
R263	1-218-660-91	s	METAL, CHIP 47 0.50% 1/16W
R271	1-218-740-11	s	METAL, CHIP 100K 0.50% 1/16W
R272	1-218-752-11	s	METAL, CHIP 330K 0.50% 1/16W
R273	1-218-660-91	s	METAL, CHIP 47 0.50% 1/16W
R275	1-218-668-11	s	METAL, CHIP 100 0.50% 1/16W
R276	1-218-708-11	s	METAL, CHIP 4.7K 0.50% 1/16W
R277	1-216-864-11	s	METAL, CHIP 0 5% 1/16W
R278	1-218-668-11	s	METAL, CHIP 100 0.50% 1/16W
R280	1-218-668-11	s	METAL, CHIP 100 0.50% 1/16W
R282	1-218-668-11	s	METAL, CHIP 100 0.50% 1/16W
R283	1-218-668-11	s	METAL, CHIP 100 0.50% 1/16W
R287	1-218-674-11	s	METAL, CHIP 180 0.50% 1/16W
R288	1-218-668-11	s	METAL, CHIP 100 0.50% 1/16W
R289	1-218-644-11	s	METAL, CHIP 10 0.50% 1/16W
R291	1-216-864-11	s	METAL, CHIP 0 5% 1/16W
R293	1-216-864-11	s	METAL, CHIP 0 5% 1/16W
R295	1-218-752-11	s	METAL, CHIP 330K 0.50% 1/16W
R297	1-216-864-11	s	METAL, CHIP 0 5% 1/16W
R298	1-216-864-11	s	METAL, CHIP 0 5% 1/16W
R300	1-218-708-11	s	METAL, CHIP 4.7K 0.50% 1/16W
R301	1-218-740-11	s	METAL, CHIP 100K 0.50% 1/16W
R302	1-218-708-11	s	METAL, CHIP 4.7K 0.50% 1/16W
R303	1-218-708-11	s	METAL, CHIP 4.7K 0.50% 1/16W
R304	1-218-740-11	s	METAL, CHIP 100K 0.50% 1/16W
R305	1-218-740-11	s	METAL, CHIP 100K 0.50% 1/16W
R306	1-218-708-11	s	METAL, CHIP 4.7K 0.50% 1/16W
R308	1-218-692-11	s	METAL, CHIP 1K 0.50% 1/16W
R309	1-218-720-11	s	METAL, CHIP 15K 0.50% 1/16W
R310	1-218-660-91	s	METAL, CHIP 47 0.50% 1/16W
R311	1-216-857-11	s	METAL, CHIP 1M 5% 1/16W
R312	1-218-644-11	s	METAL, CHIP 10 0.50% 1/16W
R313	1-218-644-11	s	METAL, CHIP 10 0.50% 1/16W
R316	1-218-692-11	s	METAL, CHIP 1K 0.50% 1/16W
R317	1-218-660-91	s	METAL, CHIP 47 0.50% 1/16W
R318	1-218-732-11	s	METAL, CHIP 47K 0.50% 1/16W
R319	1-218-732-11	s	METAL, CHIP 47K 0.50% 1/16W
R320	1-218-644-11	s	METAL, CHIP 10 0.50% 1/16W
R321	1-218-724-11	s	METAL, CHIP 22K 5% 1/16W
R322	1-218-732-11	s	METAL, CHIP 47K 0.50% 1/16W
R323	1-218-692-11	s	METAL, CHIP 1K 0.50% 1/16W
R326	1-216-864-11	s	METAL, CHIP 0 5% 1/16W
R327	1-218-644-11	s	METAL, CHIP 10 0.50% 1/16W
R329	1-218-724-11	s	METAL, CHIP 22K 5% 1/16W
R330	1-218-724-11	s	METAL, CHIP 22K 5% 1/16W
R331	1-218-728-11	s	METAL, CHIP 33K 0.50% 1/16W
R332	1-218-740-11	s	METAL, CHIP 100K 0.50% 1/16W
R333	1-216-789-11	s	METAL, CHIP 2.2 5% 1/16W

(DCP-17 BOARD)

Ref. No. or Q'ty	Part No.	SP	Description
R334	1-218-740-11	s	METAL, CHIP 100K 0.50% 1/16W
R335	1-218-740-11	s	METAL, CHIP 100K 0.50% 1/16W
R336	1-218-740-11	s	METAL, CHIP 100K 0.50% 1/16W
R337	1-216-864-11	s	METAL, CHIP 0 5% 1/16W
R338	1-218-740-11	s	METAL, CHIP 100K 0.50% 1/16W
R339	1-218-716-11	s	METAL, CHIP 10K 0.50% 1/16W
R341	1-218-716-11	s	METAL, CHIP 10K 0.50% 1/16W
R350	1-218-740-11	s	METAL, CHIP 100K 0.50% 1/16W
R351	1-218-716-11	s	METAL, CHIP 10K 0.50% 1/16W
R352	1-218-740-11	s	METAL, CHIP 100K 0.50% 1/16W
R353	1-218-668-11	s	METAL, CHIP 100 0.50% 1/16W
R354	1-218-716-11	s	METAL, CHIP 10K 0.50% 1/16W
R355	1-218-740-11	s	METAL, CHIP 100K 0.50% 1/16W
R356	1-218-740-11	s	METAL, CHIP 100K 0.50% 1/16W
R357	1-218-740-11	s	METAL, CHIP 100K 0.50% 1/16W
R358	1-218-740-11	s	METAL, CHIP 100K 0.50% 1/16W
R359	1-218-740-11	s	METAL, CHIP 100K 0.50% 1/16W
R360	1-218-732-11	s	METAL, CHIP 47K 0.50% 1/16W
R361	1-218-740-11	s	METAL, CHIP 100K 0.50% 1/16W
R365	1-218-665-11	s	METAL, CHIP 75 0.50% 1/16W
R367	1-218-704-11	s	METAL, CHIP 3.3K 0.50% 1/16W
R368	1-218-692-11	s	METAL, CHIP 1K 0.50% 1/16W
R369	1-218-660-91	s	METAL, CHIP 47 0.50% 1/16W
R370	1-218-712-11	s	METAL, CHIP 6.8K 0.50% 1/16W
R371	1-218-700-11	s	METAL, CHIP 2.2K 0.50% 1/16W
R372	1-218-706-11	s	METAL, CHIP 3.9K 0.50% 1/16W
R373	1-218-718-11	s	METAL, CHIP 12K 0.50% 1/16W
R374	1-218-716-11	s	METAL, CHIP 10K 0.50% 1/16W
R375	1-218-700-11	s	METAL, CHIP 2.2K 0.50% 1/16W
R376	1-218-716-11	s	METAL, CHIP 10K 0.50% 1/16W
R377	1-218-720-11	s	METAL, CHIP 15K 0.50% 1/16W
R378	1-218-706-11	s	METAL, CHIP 3.9K 0.50% 1/16W
R379	1-218-728-11	s	METAL, CHIP 33K 0.50% 1/16W
R380	1-218-692-11	s	METAL, CHIP 1K 0.50% 1/16W
R381	1-218-708-11	s	METAL, CHIP 4.7K 0.50% 1/16W
R382	1-218-732-11	s	METAL, CHIP 47K 0.50% 1/16W
R383	1-218-740-11	s	METAL, CHIP 100K 0.50% 1/16W
R384	1-218-732-11	s	METAL, CHIP 47K 0.50% 1/16W
R385	1-218-732-11	s	METAL, CHIP 47K 0.50% 1/16W
R386	1-218-740-11	s	METAL, CHIP 100K 0.50% 1/16W
R387	1-218-732-11	s	METAL, CHIP 47K 0.50% 1/16W
R389	1-218-692-11	s	METAL, CHIP 1K 0.50% 1/16W
R390	1-218-708-11	s	METAL, CHIP 4.7K 0.50% 1/16W
R391	1-218-732-11	s	METAL, CHIP 47K 0.50% 1/16W
R392	1-218-732-11	s	METAL, CHIP 47K 0.50% 1/16W
R393	1-218-740-11	s	METAL, CHIP 100K 0.50% 1/16W
R394	1-218-732-11	s	METAL, CHIP 47K 0.50% 1/16W
R395	1-218-732-11	s	METAL, CHIP 47K 0.50% 1/16W
R396	1-218-740-11	s	METAL, CHIP 100K 0.50% 1/16W
R398	1-218-740-11	s	METAL, CHIP 100K 0.50% 1/16W
R399	1-218-712-11	s	METAL, CHIP 6.8K 0.50% 1/16W
R400	1-218-664-11	s	METAL, CHIP 68 0.50% 1/16W
R401	1-218-740-11	s	METAL, CHIP 100K 0.50% 1/16W
R402	1-218-740-11	s	METAL, CHIP 100K 0.50% 1/16W
R403	1-218-708-11	s	METAL, CHIP 4.7K 0.50% 1/16W
R404	1-218-692-11	s	METAL, CHIP 1K 0.50% 1/16W
R405	1-218-716-11	s	METAL, CHIP 10K 0.50% 1/16W
R406	1-218-710-91	s	METAL 5.6K 0.50% 1/16W
R407	1-218-706-11	s	METAL, CHIP 3.9K 0.50% 1/16W

(DCP-17 BOARD)

Ref. No. or Q'ty	Part No.	SP	Description
R408	1-218-720-11	s	METAL, CHIP 15K 0.50% 1/16W
R409	1-218-692-11	s	METAL, CHIP 1K 0.50% 1/16W
R410	1-218-708-11	s	METAL, CHIP 4.7K 0.50% 1/16W
R411	1-218-665-11	s	METAL, CHIP 75 0.50% 1/16W
R412	1-218-665-11	s	METAL, CHIP 75 0.50% 1/16W
R413	1-218-730-11	s	METAL, CHIP 39K 0.50% 1/16W
R414	1-218-692-11	s	METAL, CHIP 1K 0.50% 1/16W
R415	1-218-692-11	s	METAL, CHIP 1K 0.50% 1/16W
R416	1-218-716-11	s	METAL, CHIP 10K 0.50% 1/16W
R417	1-218-712-11	s	METAL, CHIP 6.8K 0.50% 1/16W
R418	1-218-708-11	s	METAL, CHIP 4.7K 0.50% 1/16W
R419	1-218-692-11	s	METAL, CHIP 1K 0.50% 1/16W
R420	1-218-692-11	s	METAL, CHIP 1K 0.50% 1/16W
R421	1-218-700-11	s	METAL, CHIP 2.2K 0.50% 1/16W
R422	1-218-710-91	s	METAL 5.6K 0.50% 1/16W
R423	1-218-708-11	s	METAL, CHIP 4.7K 0.50% 1/16W
R424	1-218-668-11	s	METAL, CHIP 100 0.50% 1/16W
R425	1-218-708-11	s	METAL, CHIP 4.7K 0.50% 1/16W
R426	1-218-668-11	s	METAL, CHIP 100 0.50% 1/16W
R427	1-218-740-11	s	METAL, CHIP 100K 0.50% 1/16W
R428	1-218-708-11	s	METAL, CHIP 4.7K 0.50% 1/16W
R429	1-218-708-11	s	METAL, CHIP 4.7K 0.50% 1/16W
R430	1-218-692-11	s	METAL, CHIP 1K 0.50% 1/16W
R431	1-218-692-11	s	METAL, CHIP 1K 0.50% 1/16W
R432	1-218-710-91	s	METAL 5.6K 0.50% 1/16W
R433	1-218-708-11	s	METAL, CHIP 4.7K 0.50% 1/16W
R434	1-218-668-11	s	METAL, CHIP 100 0.50% 1/16W
R435	1-218-665-11	s	METAL, CHIP 75 0.50% 1/16W
R436	1-218-730-11	s	METAL, CHIP 39K 0.50% 1/16W
R437	1-218-692-11	s	METAL, CHIP 1K 0.50% 1/16W
R438	1-218-668-11	s	METAL, CHIP 100 0.50% 1/16W
R439	1-218-692-11	s	METAL, CHIP 1K 0.50% 1/16W
R440	1-218-664-11	s	METAL, CHIP 68 0.50% 1/16W
R441	1-218-686-11	s	METAL, CHIP 560 0.50% 1/16W
R443	1-218-694-11	s	METAL, CHIP 1.2K 0.50% 1/16W
R444	1-218-714-11	s	METAL, CHIP 8.2K 0.50% 1/16W
R445	1-218-668-11	s	METAL, CHIP 100 0.50% 1/16W
R446	1-218-732-11	s	METAL, CHIP 47K 0.50% 1/16W
R456	1-218-692-11	s	METAL, CHIP 1K 0.50% 1/16W
R461	1-218-700-11	s	METAL, CHIP 2.2K 0.50% 1/16W
R462	1-218-700-11	s	METAL, CHIP 2.2K 0.50% 1/16W
R463	1-218-660-91	s	METAL, CHIP 47 0.50% 1/16W
R464	1-218-716-11	s	METAL, CHIP 10K 0.50% 1/16W
R500	1-218-740-11	s	METAL, CHIP 100K 0.50% 1/16W
R501	1-218-740-11	s	METAL, CHIP 100K 0.50% 1/16W
R502	1-218-716-11	s	METAL, CHIP 10K 0.50% 1/16W
R503	1-218-740-11	s	METAL, CHIP 100K 0.50% 1/16W
R504	1-218-740-11	s	METAL, CHIP 100K 0.50% 1/16W
R505	1-218-740-11	s	METAL, CHIP 100K 0.50% 1/16W
R506	1-218-740-11	s	METAL, CHIP 100K 0.50% 1/16W
R507	1-218-700-11	s	METAL, CHIP 2.2K 0.50% 1/16W
R508	1-218-740-11	s	METAL, CHIP 100K 0.50% 1/16W
R509	1-218-716-11	s	METAL, CHIP 10K 0.50% 1/16W
R510	1-218-724-11	s	METAL, CHIP 22K 5% 1/16W
R511	1-218-716-11	s	METAL, CHIP 10K 0.50% 1/16W
R512	1-218-728-11	s	METAL, CHIP 33K 0.50% 1/16W
R513	1-218-736-11	s	METAL, CHIP 68K 0.50% 1/16W
R526	1-216-857-11	s	METAL, CHIP 1M 5% 1/16W
R529	1-216-857-11	s	METAL, CHIP 1M 5% 1/16W

(DCP-17 BOARD)

Ref. No. or Q'ty	Part No.	SP	Description
R533	1-216-857-11	s	METAL, CHIP 1M 5% 1/16W
R536	1-218-692-11	s	METAL, CHIP 1K 0.50% 1/16W
R537	1-218-740-11	s	METAL, CHIP 100K 0.50% 1/16W
R538	1-218-740-11	s	METAL, CHIP 100K 0.50% 1/16W
R539	1-216-857-11	s	METAL, CHIP 1M 5% 1/16W
R542	1-218-720-11	s	METAL, CHIP 15K 0.50% 1/16W
R543	1-218-728-11	s	METAL, CHIP 33K 0.50% 1/16W
R544	1-218-716-11	s	METAL, CHIP 10K 0.50% 1/16W
R545	1-218-716-11	s	METAL, CHIP 10K 0.50% 1/16W
R546	1-218-742-11	s	METAL, CHIP 120K 0.50% 1/16W
R547	1-218-740-11	s	METAL, CHIP 100K 0.50% 1/16W
R548	1-218-732-11	s	METAL, CHIP 47K 0.50% 1/16W
R549	1-218-692-11	s	METAL, CHIP 1K 0.50% 1/16W
R560	1-218-716-11	s	METAL, CHIP 10K 0.50% 1/16W
R561	1-218-716-11	s	METAL, CHIP 10K 0.50% 1/16W
R562	1-218-716-11	s	METAL, CHIP 10K 0.50% 1/16W
R563*k	1-218-742-11	s	METAL, CHIP 120K 0.50% 1/16W
R564	1-218-740-11	s	METAL, CHIP 100K 0.50% 1/16W
R565*j	1-218-728-11	s	METAL, CHIP 33K 0.50% 1/16W
R565*m	1-218-732-11	s	METAL, CHIP 47K 0.50% 1/16W
R566	1-218-692-11	s	METAL, CHIP 1K 0.50% 1/16W
R567	1-216-857-11	s	METAL, CHIP 1M 5% 1/16W
R568	1-216-855-11	s	METAL, CHIP 680K 5% 1/16W
R569	1-218-748-11	s	METAL, CHIP 220K 0.50% 1/16W
R570	1-218-752-11	s	METAL, CHIP 330K 0.50% 1/16W
R571	1-218-752-11	s	METAL, CHIP 330K 0.50% 1/16W
R572	1-218-692-11	s	METAL, CHIP 1K 0.50% 1/16W
R591	1-218-660-91	s	METAL, CHIP 47 0.50% 1/16W
R606	1-218-692-11	s	METAL, CHIP 1K 0.50% 1/16W
R607	1-218-716-11	s	METAL, CHIP 10K 0.50% 1/16W
R608	1-218-716-11	s	METAL, CHIP 10K 0.50% 1/16W
R609	1-218-740-11	s	METAL, CHIP 100K 0.50% 1/16W
R610	1-218-740-11	s	METAL, CHIP 100K 0.50% 1/16W
R611	1-218-692-11	s	METAL, CHIP 1K 0.50% 1/16W
R613	1-218-716-11	s	METAL, CHIP 10K 0.50% 1/16W
R619	1-216-864-11	s	METAL, CHIP 0 5% 1/16W
R620	1-216-864-11	s	METAL, CHIP 0 5% 1/16W
R625	1-218-728-11	s	METAL, CHIP 33K 0.50% 1/16W
R628	1-218-668-11	s	METAL, CHIP 100 0.50% 1/16W
R630	1-218-660-91	s	METAL, CHIP 47 0.50% 1/16W
R631	1-218-716-11	s	METAL, CHIP 10K 0.50% 1/16W
R632	1-218-668-11	s	METAL, CHIP 100 0.50% 1/16W
R634	1-218-668-11	s	METAL, CHIP 100 0.50% 1/16W
R636	1-216-855-11	s	METAL, CHIP 680K 5% 1/16W
R637	1-218-704-11	s	METAL, CHIP 3.3K 0.50% 1/16W
R638	1-218-668-11	s	METAL, CHIP 100 0.50% 1/16W
R640	1-218-720-11	s	METAL, CHIP 15K 0.50% 1/16W
R641	1-218-692-11	s	METAL, CHIP 1K 0.50% 1/16W
R694	1-218-716-11	s	METAL, CHIP 10K 0.50% 1/16W
R695	1-218-740-11	s	METAL, CHIP 100K 0.50% 1/16W
R696	1-218-740-11	s	METAL, CHIP 100K 0.50% 1/16W
R698	1-216-864-11	s	METAL, CHIP 0 5% 1/16W
R700	1-218-644-11	s	METAL, CHIP 10 0.50% 1/16W
R702	1-218-692-11	s	METAL, CHIP 1K 0.50% 1/16W
R703	1-218-692-11	s	METAL, CHIP 1K 0.50% 1/16W
R704	1-218-692-11	s	METAL, CHIP 1K 0.50% 1/16W
R705	1-216-864-11	s	METAL, CHIP 0 5% 1/16W
R706	1-216-864-11	s	METAL, CHIP 0 5% 1/16W
R707	1-216-864-11	s	METAL, CHIP 0 5% 1/16W
R710	1-218-644-11	s	METAL, CHIP 10 0.50% 1/16W

(DCP-17 BOARD)

Ref. No. or Q'ty	Part No.	SP	Description
R711	1-218-732-11	s	METAL, CHIP 47K 0.50% 1/16W
R712	1-218-732-11	s	METAL, CHIP 47K 0.50% 1/16W
R713	1-218-732-11	s	METAL, CHIP 47K 0.50% 1/16W
R714	1-218-724-11	s	METAL, CHIP 22K 5% 1/16W
R715	1-218-724-11	s	METAL, CHIP 22K 5% 1/16W
R716	1-218-724-11	s	METAL, CHIP 22K 5% 1/16W
R717	1-218-716-11	s	METAL, CHIP 10K 0.50% 1/16W
R718	1-218-704-11	s	METAL, CHIP 3.3K 0.50% 1/16W
R719	1-218-704-11	s	METAL, CHIP 3.3K 0.50% 1/16W
R720	1-218-704-11	s	METAL, CHIP 3.3K 0.50% 1/16W
R721	1-218-668-11	s	METAL, CHIP 100 0.50% 1/16W
R722	1-218-672-11	s	METAL, CHIP 150 0.50% 1/16W
R723	1-218-704-11	s	METAL, CHIP 3.3K 0.50% 1/16W
R724	1-218-692-11	s	METAL, CHIP 1K 0.50% 1/16W
R725	1-218-692-11	s	METAL, CHIP 1K 0.50% 1/16W
R726	1-218-708-11	s	METAL, CHIP 4.7K 0.50% 1/16W
R727	1-218-672-11	s	METAL, CHIP 150 0.50% 1/16W
R728	1-218-704-11	s	METAL, CHIP 3.3K 0.50% 1/16W
R729	1-218-692-11	s	METAL, CHIP 1K 0.50% 1/16W
R730	1-218-692-11	s	METAL, CHIP 1K 0.50% 1/16W
R731	1-218-708-11	s	METAL, CHIP 4.7K 0.50% 1/16W
R732	1-218-672-11	s	METAL, CHIP 150 0.50% 1/16W
R733	1-218-704-11	s	METAL, CHIP 3.3K 0.50% 1/16W
R734	1-218-692-11	s	METAL, CHIP 1K 0.50% 1/16W
R735	1-218-692-11	s	METAL, CHIP 1K 0.50% 1/16W
R736	1-218-708-11	s	METAL, CHIP 4.7K 0.50% 1/16W
R737	1-218-668-11	s	METAL, CHIP 100 0.50% 1/16W
R738	1-218-668-11	s	METAL, CHIP 100 0.50% 1/16W
R739	1-216-864-11	s	METAL, CHIP 0 5% 1/16W
R741	1-218-740-11	s	METAL, CHIP 100K 0.50% 1/16W
R744	1-218-668-11	s	METAL, CHIP 100 0.50% 1/16W
R745	1-218-668-11	s	METAL, CHIP 100 0.50% 1/16W
R746	1-216-864-11	s	METAL, CHIP 0 5% 1/16W
R748	1-218-740-11	s	METAL, CHIP 100K 0.50% 1/16W
R751	1-218-668-11	s	METAL, CHIP 100 0.50% 1/16W
R752	1-218-668-11	s	METAL, CHIP 100 0.50% 1/16W
R753	1-216-864-11	s	METAL, CHIP 0 5% 1/16W
R755	1-218-740-11	s	METAL, CHIP 100K 0.50% 1/16W
R802	1-218-740-11	s	METAL, CHIP 100K 0.50% 1/16W
R809	1-216-864-11	s	METAL, CHIP 0 5% 1/16W
R810	1-218-740-11	s	METAL, CHIP 100K 0.50% 1/16W
R811	1-218-730-11	s	METAL, CHIP 39K 0.50% 1/16W
R812	1-218-708-11	s	METAL, CHIP 4.7K 0.50% 1/16W
R813	1-218-708-11	s	METAL, CHIP 4.7K 0.50% 1/16W
R814	1-216-853-11	s	METAL, CHIP 470K 5% 1/16W
R816	1-218-732-11	s	METAL, CHIP 47K 0.50% 1/16W
R817	1-218-668-11	s	METAL, CHIP 100 0.50% 1/16W
R821	1-218-708-11	s	METAL, CHIP 4.7K 0.50% 1/16W
R822	1-218-708-11	s	METAL, CHIP 4.7K 0.50% 1/16W
R823	1-218-716-11	s	METAL, CHIP 10K 0.50% 1/16W
R824	1-218-716-11	s	METAL, CHIP 10K 0.50% 1/16W
R825	1-218-716-11	s	METAL, CHIP 10K 0.50% 1/16W
R826	1-218-716-11	s	METAL, CHIP 10K 0.50% 1/16W
R827	1-218-716-11	s	METAL, CHIP 10K 0.50% 1/16W
R828	1-218-716-11	s	METAL, CHIP 10K 0.50% 1/16W
R829	1-218-716-11	s	METAL, CHIP 10K 0.50% 1/16W
R830	1-218-716-11	s	METAL, CHIP 10K 0.50% 1/16W
R831	1-218-728-11	s	METAL, CHIP 33K 0.50% 1/16W
R832	1-218-724-11	s	METAL, CHIP 22K 5% 1/16W

(DCP-17 BOARD)

Ref. No. or Q'ty	Part No.	SP	Description
R833	1-218-716-11	s	METAL, CHIP 10K 0.50% 1/16W
R834	1-218-752-11	s	METAL, CHIP 330K 0.50% 1/16W
R835	1-218-668-11	s	METAL, CHIP 100 0.50% 1/16W
R836	1-218-724-11	s	METAL, CHIP 22K 5% 1/16W
R837	1-218-740-11	s	METAL, CHIP 100K 0.50% 1/16W
R838	1-216-861-11	s	METAL, CHIP 2.2M 5% 1/16W
R839	1-218-724-11	s	METAL, CHIP 22K 5% 1/16W
R840	1-218-724-11	s	METAL, CHIP 22K 5% 1/16W
R841	1-218-724-11	s	METAL, CHIP 22K 5% 1/16W
R842	1-218-728-11	s	METAL, CHIP 33K 0.50% 1/16W
R843	1-218-728-11	s	METAL, CHIP 33K 0.50% 1/16W
R844	1-218-716-11	s	METAL, CHIP 10K 0.50% 1/16W
R845	1-218-716-11	s	METAL, CHIP 10K 0.50% 1/16W
R846	1-218-728-11	s	METAL, CHIP 33K 0.50% 1/16W
R847	1-218-728-11	s	METAL, CHIP 33K 0.50% 1/16W
R848	1-218-728-11	s	METAL, CHIP 33K 0.50% 1/16W
R849	1-218-728-11	s	METAL, CHIP 33K 0.50% 1/16W
R850	1-218-728-11	s	METAL, CHIP 33K 0.50% 1/16W
R851	1-218-728-11	s	METAL, CHIP 33K 0.50% 1/16W
R852	1-218-740-11	s	METAL, CHIP 100K 0.50% 1/16W
R853	1-218-740-11	s	METAL, CHIP 100K 0.50% 1/16W
R854	1-218-740-11	s	METAL, CHIP 100K 0.50% 1/16W
R855	1-218-740-11	s	METAL, CHIP 100K 0.50% 1/16W
R856	1-218-748-11	s	METAL, CHIP 220K 0.50% 1/16W
R857	1-218-748-11	s	METAL, CHIP 220K 0.50% 1/16W
R858	1-218-748-11	s	METAL, CHIP 220K 0.50% 1/16W
R859	1-218-748-11	s	METAL, CHIP 220K 0.50% 1/16W
R860	1-218-740-11	s	METAL, CHIP 100K 0.50% 1/16W
R861	1-218-752-11	s	METAL, CHIP 330K 0.50% 1/16W
R862	1-216-854-11	s	METAL, CHIP 560K 5% 1/16W
R863	1-216-857-11	s	METAL, CHIP 1M 5% 1/16W
R864	1-216-857-11	s	METAL, CHIP 1M 5% 1/16W
R865	1-218-748-11	s	METAL, CHIP 220K 0.50% 1/16W
R866	1-218-740-11	s	METAL, CHIP 100K 0.50% 1/16W
R867	1-218-740-11	s	METAL, CHIP 100K 0.50% 1/16W
R868	1-218-740-11	s	METAL, CHIP 100K 0.50% 1/16W
R869	1-218-740-11	s	METAL, CHIP 100K 0.50% 1/16W
R870	1-218-748-11	s	METAL, CHIP 220K 0.50% 1/16W
R871	1-218-748-11	s	METAL, CHIP 220K 0.50% 1/16W
R872	1-218-748-11	s	METAL, CHIP 220K 0.50% 1/16W
R873	1-218-748-11	s	METAL, CHIP 220K 0.50% 1/16W
R874	1-218-740-11	s	METAL, CHIP 100K 0.50% 1/16W
R875	1-218-752-11	s	METAL, CHIP 330K 0.50% 1/16W
R876	1-216-854-11	s	METAL, CHIP 560K 5% 1/16W
R877	1-216-857-11	s	METAL, CHIP 1M 5% 1/16W
R878	1-216-857-11	s	METAL, CHIP 1M 5% 1/16W
R879	1-218-748-11	s	METAL, CHIP 220K 0.50% 1/16W
R880	1-218-740-11	s	METAL, CHIP 100K 0.50% 1/16W
R881	1-218-740-11	s	METAL, CHIP 100K 0.50% 1/16W
R882	1-218-740-11	s	METAL, CHIP 100K 0.50% 1/16W
R883	1-218-740-11	s	METAL, CHIP 100K 0.50% 1/16W
R884	1-218-748-11	s	METAL, CHIP 220K 0.50% 1/16W
R885	1-218-748-11	s	METAL, CHIP 220K 0.50% 1/16W
R886	1-218-748-11	s	METAL, CHIP 220K 0.50% 1/16W
R887	1-218-748-11	s	METAL, CHIP 220K 0.50% 1/16W
R888	1-218-740-11	s	METAL, CHIP 100K 0.50% 1/16W
R889	1-218-752-11	s	METAL, CHIP 330K 0.50% 1/16W
R890	1-216-854-11	s	METAL, CHIP 560K 5% 1/16W
R891	1-216-857-11	s	METAL, CHIP 1M 5% 1/16W

(DCP-17 BOARD)

Ref. No. or Q'ty	Part No.	SP	Description
R892	1-216-857-11	s	METAL, CHIP 1M 5% 1/16W
R893	1-218-748-11	s	METAL, CHIP 220K 0.50% 1/16W
R894	1-218-660-91	s	METAL, CHIP 47 0.50% 1/16W
R895	1-218-660-91	s	METAL, CHIP 47 0.50% 1/16W
R896	1-218-660-91	s	METAL, CHIP 47 0.50% 1/16W
R898	1-218-660-91	s	METAL, CHIP 47 0.50% 1/16W
R899	1-218-714-11	s	METAL, CHIP 8.2K 0.50% 1/16W
R900	1-218-714-11	s	METAL, CHIP 8.2K 0.50% 1/16W
R901	1-218-714-11	s	METAL, CHIP 8.2K 0.50% 1/16W
R902	1-218-660-91	s	METAL, CHIP 47 0.50% 1/16W
R903	1-218-660-91	s	METAL, CHIP 47 0.50% 1/16W
R904	1-218-660-91	s	METAL, CHIP 47 0.50% 1/16W
R905	1-218-712-11	s	METAL, CHIP 6.8K 0.50% 1/16W
R906	1-218-712-11	s	METAL, CHIP 6.8K 0.50% 1/16W
R907	1-218-712-11	s	METAL, CHIP 6.8K 0.50% 1/16W
R908	1-218-660-91	s	METAL, CHIP 47 0.50% 1/16W
R909	1-218-660-91	s	METAL, CHIP 47 0.50% 1/16W
R910	1-218-660-91	s	METAL, CHIP 47 0.50% 1/16W
R912	1-218-668-11	s	METAL, CHIP 100 0.50% 1/16W
R913	1-218-692-11	s	METAL, CHIP 1K 0.50% 1/16W
R914	1-218-740-11	s	METAL, CHIP 100K 0.50% 1/16W
R915	1-218-740-11	s	METAL, CHIP 100K 0.50% 1/16W
R916	1-218-740-11	s	METAL, CHIP 100K 0.50% 1/16W
R917	1-216-864-11	s	METAL, CHIP 0 5% 1/16W
R919	1-218-668-11	s	METAL, CHIP 100 0.50% 1/16W
R920	1-218-732-11	s	METAL, CHIP 47K 0.50% 1/16W
R1261	1-218-740-11	s	METAL, CHIP 100K 0.50% 1/16W
R1292	1-218-728-11	s	METAL, CHIP 33K 0.50% 1/16W
R1365	1-218-728-11	s	METAL, CHIP 33K 0.50% 1/16W
RB1	1-239-409-11	s	RESISTOR BLOCK, CHIP 47X4
RB2	1-239-409-11	s	RESISTOR BLOCK, CHIP 47X4
RB3	1-236-907-11	s	RESISTOR BLOCK, CHIP 100KX4
RB4	1-236-907-11	s	RESISTOR BLOCK, CHIP 100KX4
RB5	1-239-412-11	s	NETWORK RESISTOR (CHIP) 100
RB6	1-236-904-11	s	RESISTOR BLOCK, CHIP 1KX4
RB7	1-236-907-11	s	RESISTOR BLOCK, CHIP 100KX4
RB8	1-236-907-11	s	RESISTOR BLOCK, CHIP 100KX4
RB15	1-236-904-11	s	RESISTOR BLOCK, CHIP 1KX4
RB16	1-236-907-11	s	RESISTOR BLOCK, CHIP 100KX4
RB18	1-239-309-11	s	RESISTOR BLOCK, CHIP 100KX8
RB19	1-239-409-11	s	RESISTOR BLOCK, CHIP 47X4
RB20	1-239-409-11	s	RESISTOR BLOCK, CHIP 47X4
RB21	1-239-409-11	s	RESISTOR BLOCK, CHIP 47X4
RB22	1-239-409-11	s	RESISTOR BLOCK, CHIP 47X4
RB24	1-239-412-11	s	NETWORK RESISTOR (CHIP) 100
RB25	1-239-409-11	s	RESISTOR BLOCK, CHIP 47X4
RB26	1-239-412-11	s	NETWORK RESISTOR (CHIP) 100
RB30	1-239-309-11	s	RESISTOR BLOCK, CHIP 100KX8
RB31	1-236-904-11	s	RESISTOR BLOCK, CHIP 1KX4
RB32	1-239-412-11	s	NETWORK RESISTOR (CHIP) 100
RB33	1-236-907-11	s	RESISTOR BLOCK, CHIP 100KX4
RB34	1-236-907-11	s	RESISTOR BLOCK, CHIP 100KX4
RB35	1-236-904-11	s	RESISTOR BLOCK, CHIP 1KX4
RB36	1-239-286-11	s	RESISTOR BLOCK, CHIP 22K
RB43	1-236-904-11	s	RESISTOR BLOCK, CHIP 1KX4
RB44	1-239-309-11	s	RESISTOR BLOCK, CHIP 100KX8
RB46	1-236-904-11	s	RESISTOR BLOCK, CHIP 1KX4
RB47	1-239-412-11	s	NETWORK RESISTOR (CHIP) 100
RB49	1-236-904-11	s	RESISTOR BLOCK, CHIP 1KX4

(DCP-17 BOARD)

Ref. No. or Q'ty	Part No.	SP	Description
RB51	1-236-904-11	s	RESISTOR BLOCK, CHIP 1KX4
RB52	1-236-904-11	s	RESISTOR BLOCK, CHIP 1KX4
RB55	1-236-904-11	s	RESISTOR BLOCK, CHIP 1KX4
RB56	1-236-904-11	s	RESISTOR BLOCK, CHIP 1KX4
RB57	1-239-309-11	s	RESISTOR BLOCK, CHIP 100KX8
RB58	1-239-409-11	s	RESISTOR BLOCK, CHIP 47X4
RB59	1-239-409-11	s	RESISTOR BLOCK, CHIP 47X4
RB60	1-239-409-11	s	RESISTOR BLOCK, CHIP 47X4
RB61	1-239-409-11	s	RESISTOR BLOCK, CHIP 47X4
RB62	1-239-409-11	s	RESISTOR BLOCK, CHIP 47X4
RB63	1-239-409-11	s	RESISTOR BLOCK, CHIP 47X4
S1	1-771-140-11	s	SWITCH, SLIDE
S4	1-692-271-31	s	SWITCH, SLIDE
X1	1-767-438-11	s	VIBRATOR, CRYSTAL
X2	1-760-273-11	s	CRYSTAL 20MHz
X3	1-760-435-11	s	CRYSTAL 18.00MHz

DR-387 BOARD

Note

*n: Serial No.10001 through 10020 (707 SY)
30001 through 30010 (707 J)
10001 through 10035 (709WS SY/790WS SY)
30001 through 30005 (709WS J/790WS J)
40001 through 40035 (707P)
40001 through 40100 (709WSP)
40001 through 40085 (790WSP)

*p: Serial No.10021 and higher (707 SY)
30006 and higher (707 J/709WS J/790WS J)
10036 and higher (709WS SY/790WS SY)
40036 and higher (707P)
40101 and higher (709WSP)
40086 and higher (790WSP)

Ref. No. or Q'ty	Part No.	SP	Description
C1	1-126-400-11	s	ELECT, CHIP 22uF 20% 35V
C2	1-126-768-11	s	ELECT 2200uF 20% 16V
C3	1-104-823-11	s	TANTALUM, CHIP 47uF 20% 16V
C4	1-162-927-11	s	CERAMIC, CHIP 100PF 5% 50V
C5	1-126-400-11	s	ELECT, CHIP 22uF 20% 35V
C6	1-104-665-11	s	ELECT 100uF 20% 25V
C7*n	1-164-156-11	s	CERAMIC, CHIP 0.1uF 25V
C8	1-164-230-11	s	CERAMIC 220PF 5% 50V
C9	1-126-400-11	s	ELECT, CHIP 22uF 20% 35V
C10	1-128-528-11	s	ELECT 470uF 20% 16V
C11	1-104-478-11	s	TANTAUM, CHIP 10uF 20% 35V
C12	1-104-478-11	s	TANTAUM, CHIP 10uF 20% 35V
C13	1-126-397-11	s	ELECT, CHIP 33uF 20% 25V
C14	1-126-942-61	s	ELECT 1000uF 20% 25V
C15	1-104-478-11	s	TANTAUM, CHIP 10uF 20% 35V
C16	1-113-981-11	s	TANTALUM, CHIP 22uF 20% 20V
C17	1-164-156-11	s	CERAMIC, CHIP 0.1uF 25V
C18	1-164-156-11	s	CERAMIC, CHIP 0.1uF 25V
C19	1-164-156-11	s	CERAMIC, CHIP 0.1uF 25V
C20	1-164-156-11	s	CERAMIC, CHIP 0.1uF 25V
C21	1-164-156-11	s	CERAMIC, CHIP 0.1uF 25V
C22	1-164-156-11	s	CERAMIC, CHIP 0.1uF 25V
C23	1-113-991-11	s	TANTALUM, CHIP 33uF 20% 16V
C24	1-164-156-11	s	CERAMIC, CHIP 0.1uF 25V
C25	1-107-686-11	s	TANTALUM, CHIP 4.7uF 20% 16V
C26	1-113-984-11	s	TANTALUM 1.5uF 20% 35V
C27	1-113-981-11	s	TANTALUM, CHIP 22uF 20% 20V
C28	1-162-970-11	s	CERAMIC, CHIP 0.01uF 10% 25V
C29	1-135-212-21	s	TANTALUM, CHIP 2.2uF 20% 35V
C30	1-162-970-11	s	CERAMIC, CHIP 0.01uF 10% 25V
C31	1-104-851-11	s	TANTALUM, CHIP 10uF 20% 10V
C32	1-104-851-11	s	TANTALUM, CHIP 10uF 20% 10V
C33	1-162-964-11	s	CERAMIC, CHIP 0.001uF 10% 50V
C34	1-113-985-11	s	TANTALUM, CHIP 10uF 20% 20V
C35	1-164-156-11	s	CERAMIC, CHIP 0.1uF 25V
C36	1-162-964-11	s	CERAMIC, CHIP 0.001uF 10% 50V
C37	1-164-156-11	s	CERAMIC, CHIP 0.1uF 25V
C38	1-164-230-11	s	CERAMIC 220PF 5% 50V
C39	1-110-398-11	s	TANTALUM, CHIP 15uF 20% 35V
C40	1-162-964-11	s	CERAMIC, CHIP 0.001uF 10% 50V
C41	1-113-991-11	s	TANTALUM, CHIP 33uF 20% 16V
C42	1-113-981-11	s	TANTALUM, CHIP 22uF 20% 20V
C43	1-113-991-11	s	TANTALUM, CHIP 33uF 20% 16V
C44	1-110-398-11	s	TANTALUM, CHIP 15uF 20% 35V
C45	1-164-156-11	s	CERAMIC, CHIP 0.1uF 25V
C46	1-164-156-11	s	CERAMIC, CHIP 0.1uF 25V
C47	1-104-919-11	s	TANTALUM, CHIP 10uF 20% 25V

(DR-387 BOARD)

Ref. No. or Q'ty	Part No.	SP	Description
C48	1-164-156-11	s	CERAMIC, CHIP 0.1uF 25V
C50*p	1-131-349-21	s	CAP, TANTALUM ELECT 2.2MF/35V
CN1	1-568-335-11	s	CONNECTOR, BOARD TO BOARD 18P
CN2	1-766-382-11	o	PIN, CONNECTOR (1.5MM)(SMD)10P
CN3	1-695-442-21	o	PIN, CONNECTOR (PC BOARD) 10P
CN5	1-568-335-11	s	CONNECTOR, BOARD TO BOARD 18P
CN6	1-691-942-11	s	CONNECTOR, BOARD TO BOARD 30P
CN7	1-573-310-11	s	CONNECTOR, BOARD TO BOARD 20P
CN8	1-573-290-21	s	PIN, CONNECTOR (1.5MM) (SMD)4P
D1	8-719-210-39	s	DIODE EC10QS04-TE12L5
D2	8-719-210-39	s	DIODE EC10QS04-TE12L5
D3	8-719-104-34	s	DIODE 1S2835
D4	8-719-104-34	s	DIODE 1S2835
D5	8-719-104-34	s	DIODE 1S2835
D6	8-719-800-76	s	DIODE 1SS226
D8	8-719-029-57	s	DIODE RD2.4UH-T1
D9	8-719-041-68	s	DIODE RD3.3UH-T1
D10	8-719-948-48	s	DIODE HSM88AS-TL
D11	8-719-948-48	s	DIODE HSM88AS-TL
IC1	8-759-175-04	s	IC PCF8574T-T
IC2	8-759-234-20	s	IC TC7S08F
IC3	8-759-172-33	s	IC UPD16502GS(1)
IC4	8-759-172-33	s	IC UPD16502GS(1)
IC5	8-759-172-33	s	IC UPD16502GS(1)
IC6	8-759-172-33	s	IC UPD16502GS(1)
IC7	8-759-172-33	s	IC UPD16502GS(1)
IC8	8-759-172-33	s	IC UPD16502GS(1)
IC9	8-759-979-69	s	IC TSC426C0A
IC10	8-759-076-06	s	IC TL064CPW
IC11	8-759-234-77	s	IC TC4S66F
IC12	8-759-337-40	s	IC NJM2904V(TE2)
IC13	8-759-196-96	s	IC TC7SH08FU-TE85R
IC14	8-759-196-96	s	IC TC7SH08FU-TE85R
IC17	8-759-082-61	s	IC TC4W53FU
IC18	8-759-082-61	s	IC TC4W53FU
IC19	8-759-635-27	s	IC M62352GP
IC20	8-759-175-04	s	IC PCF8574T-T
IC21	8-759-234-77	s	IC TC4S66F
Q1	8-729-122-63	s	TRANSISTOR 2SA1226
Q2	8-729-421-71	s	TRANSISTOR 2SK620
Q3	8-729-120-28	s	TRANSISTOR 2SC1623-L5L6
Q4	8-729-141-48	s	TRANSISTOR 2SB624-BV345
Q6	8-729-141-48	s	TRANSISTOR 2SB624-BV345
Q7	8-729-141-75	s	TRANSISTOR 2SD596DV345
Q8	8-729-120-28	s	TRANSISTOR 2SC1623-L5L6
Q9	8-729-140-47	s	TRANSISTOR 2SC3735-B34
Q10	8-729-112-65	s	TRANSISTOR 2SA1462
Q11	8-729-112-65	s	TRANSISTOR 2SA1462
Q12	8-729-140-47	s	TRANSISTOR 2SC3735-B34
Q13	8-729-141-48	s	TRANSISTOR 2SB624-BV345
R1	1-218-644-11	s	METAL, CHIP 10 0.50% 1/16W
R2	1-218-644-11	s	METAL, CHIP 10 0.50% 1/16W
R3	1-218-644-11	s	METAL, CHIP 10 0.50% 1/16W
R4	1-218-716-11	s	METAL, CHIP 10K 0.50% 1/16W
R5	1-218-718-11	s	METAL, CHIP 12K 0.50% 1/16W
R6	1-218-704-11	s	METAL, CHIP 3.3K 0.50% 1/16W
R7	1-218-716-11	s	METAL, CHIP 10K 0.50% 1/16W
R8	1-218-692-11	s	METAL, CHIP 1K 0.50% 1/16W

(DR-387 BOARD)

Ref. No. or Q'ty	Part No.	SP	Description
R9	1-218-668-11	s	METAL, CHIP 100 0.50% 1/16W
R10	1-218-732-11	s	METAL, CHIP 47K 0.50% 1/16W
R11*n	1-218-724-11	s	METAL, CHIP 22K 5% 1/16W
R12	1-218-851-11	s	METAL, CHIP 1.5K 0.50% 1/16W
R13	1-218-648-11	s	METAL, CHIP 15 0.50% 1/16W
R14	1-218-648-11	s	METAL, CHIP 15 0.50% 1/16W
R15	1-218-668-11	s	METAL, CHIP 100 0.50% 1/16W
R16	1-218-740-11	s	METAL, CHIP 100K 0.50% 1/16W
R17	1-218-728-11	s	METAL, CHIP 33K 0.50% 1/16W
R18	1-218-656-11	s	METAL, CHIP 33 0.50% 1/16W
R19	1-218-728-11	s	METAL, CHIP 33K 0.50% 1/16W
R20	1-218-728-11	s	METAL, CHIP 33K 0.50% 1/16W
R21	1-218-716-11	s	METAL, CHIP 10K 0.50% 1/16W
R22	1-218-728-11	s	METAL, CHIP 33K 0.50% 1/16W
R23	1-218-728-11	s	METAL, CHIP 33K 0.50% 1/16W
R24	1-218-728-11	s	METAL, CHIP 33K 0.50% 1/16W
R25	1-218-728-11	s	METAL, CHIP 33K 0.50% 1/16W
R26	1-218-728-11	s	METAL, CHIP 33K 0.50% 1/16W
R27	1-218-728-11	s	METAL, CHIP 33K 0.50% 1/16W
R28	1-218-728-11	s	METAL, CHIP 33K 0.50% 1/16W
R29	1-218-728-11	s	METAL, CHIP 33K 0.50% 1/16W
R30	1-218-692-11	s	METAL, CHIP 1K 0.50% 1/16W
R31	1-218-740-11	s	METAL, CHIP 100K 0.50% 1/16W
R32	1-218-740-11	s	METAL, CHIP 100K 0.50% 1/16W
R33	1-216-864-11	s	METAL, CHIP 0 5% 1/16W
R34	1-216-864-11	s	METAL, CHIP 0 5% 1/16W
R35	1-216-864-11	s	METAL, CHIP 0 5% 1/16W
R36	1-216-864-11	s	METAL, CHIP 0 5% 1/16W
R37	1-216-864-11	s	METAL, CHIP 0 5% 1/16W
R38	1-216-864-11	s	METAL, CHIP 0 5% 1/16W
R39	1-216-864-11	s	METAL, CHIP 0 5% 1/16W
R40	1-216-864-11	s	METAL, CHIP 0 5% 1/16W
R41	1-216-864-11	s	METAL, CHIP 0 5% 1/16W
R42	1-216-864-11	s	METAL, CHIP 0 5% 1/16W
R43	1-216-864-11	s	METAL, CHIP 0 5% 1/16W
R44	1-216-864-11	s	METAL, CHIP 0 5% 1/16W
R45	1-216-864-11	s	METAL, CHIP 0 5% 1/16W
R46	1-216-864-11	s	METAL, CHIP 0 5% 1/16W
R47	1-216-864-11	s	METAL, CHIP 0 5% 1/16W
R48	1-216-864-11	s	METAL, CHIP 0 5% 1/16W
R49	1-216-864-11	s	METAL, CHIP 0 5% 1/16W
R50	1-216-864-11	s	METAL, CHIP 0 5% 1/16W
R51	1-216-864-11	s	METAL, CHIP 0 5% 1/16W
R52	1-218-728-11	s	METAL, CHIP 33K 0.50% 1/16W
R53	1-218-728-11	s	METAL, CHIP 33K 0.50% 1/16W
R54	1-216-864-11	s	METAL, CHIP 0 5% 1/16W
R55	1-216-864-11	s	METAL, CHIP 0 5% 1/16W
R56	1-216-864-11	s	METAL, CHIP 0 5% 1/16W
R57	1-216-864-11	s	METAL, CHIP 0 5% 1/16W
R58	1-216-864-11	s	METAL, CHIP 0 5% 1/16W
R59	1-218-644-11	s	METAL, CHIP 10 0.50% 1/16W
R60	1-218-723-91	s	METAL, CHIP 20K 0.50% 1/16W
R61	1-218-723-91	s	METAL, CHIP 20K 0.50% 1/16W
R62	1-218-723-91	s	METAL, CHIP 20K 0.50% 1/16W
R63	1-218-644-11	s	METAL, CHIP 10 0.50% 1/16W
R64	1-218-732-11	s	METAL, CHIP 47K 0.50% 1/16W
R65	1-218-732-11	s	METAL, CHIP 47K 0.50% 1/16W
R66	1-218-732-11	s	METAL, CHIP 47K 0.50% 1/16W
R67	1-218-644-11	s	METAL, CHIP 10 0.50% 1/16W
R68	1-218-739-91	s	METAL 91K 0.50% 1/16W

(DR-387 BOARD)

Ref. No. or Q'ty	Part No.	SP	Description
R69	1-218-732-11	s	METAL, CHIP 47K 0.50% 1/16W
R70	1-218-716-11	s	METAL, CHIP 10K 0.50% 1/16W
R71	1-218-716-11	s	METAL, CHIP 10K 0.50% 1/16W
R72	1-218-701-11	s	METAL, CHIP 2.4K 0.50% 1/16W
R73	1-218-712-11	s	METAL, CHIP 6.8K 0.50% 1/16W
R74	1-218-720-11	s	METAL, CHIP 15K 0.50% 1/16W
R75	1-218-730-11	s	METAL, CHIP 39K 0.50% 1/16W
R76	1-218-701-11	s	METAL, CHIP 2.4K 0.50% 1/16W
R77	1-218-712-11	s	METAL, CHIP 6.8K 0.50% 1/16W
R78	1-218-720-11	s	METAL, CHIP 15K 0.50% 1/16W
R79	1-218-730-11	s	METAL, CHIP 39K 0.50% 1/16W
R80	1-218-668-11	s	METAL, CHIP 100 0.50% 1/16W
R81	1-218-644-11	s	METAL, CHIP 10 0.50% 1/16W
R82	1-218-644-11	s	METAL, CHIP 10 0.50% 1/16W
R83	1-218-644-11	s	METAL, CHIP 10 0.50% 1/16W
R84	1-218-692-11	s	METAL, CHIP 1K 0.50% 1/16W
R85	1-218-711-11	s	METAL, CHIP 6.2K 0.50% 1/16W
R86	1-218-695-11	s	METAL, CHIP 1.3K 0.50% 1/16W
R87	1-218-716-11	s	METAL, CHIP 10K 0.50% 1/16W
R88	1-218-703-11	s	METAL, CHIP 3K 0.50% 1/16W
R89	1-218-716-11	s	METAL, CHIP 10K 0.50% 1/16W
R91	1-218-728-11	s	METAL, CHIP 33K 0.50% 1/16W
R92	1-218-740-11	s	METAL, CHIP 100K 0.50% 1/16W
R93	1-218-740-11	s	METAL, CHIP 100K 0.50% 1/16W
R94	1-218-740-11	s	METAL, CHIP 100K 0.50% 1/16W
R95	1-218-728-11	s	METAL, CHIP 33K 0.50% 1/16W
R96	1-218-728-11	s	METAL, CHIP 33K 0.50% 1/16W
R97	1-218-668-11	s	METAL, CHIP 100 0.50% 1/16W
R98	1-218-728-11	s	METAL, CHIP 33K 0.50% 1/16W
R101	1-218-676-11	s	METAL, CHIP 220 0.50% 1/16W
R102	1-218-668-11	s	METAL, CHIP 100 0.50% 1/16W
R103	1-218-740-11	s	METAL, CHIP 100K 0.50% 1/16W
R104	1-218-740-11	s	METAL, CHIP 100K 0.50% 1/16W
R105	1-218-740-11	s	METAL, CHIP 100K 0.50% 1/16W
R106	1-218-740-11	s	METAL, CHIP 100K 0.50% 1/16W
R107	1-218-740-11	s	METAL, CHIP 100K 0.50% 1/16W
R108	1-218-740-11	s	METAL, CHIP 100K 0.50% 1/16W
R109	1-218-740-11	s	METAL, CHIP 100K 0.50% 1/16W
R112	1-218-644-11	s	METAL, CHIP 10 0.50% 1/16W
R113	1-218-644-11	s	METAL, CHIP 10 0.50% 1/16W

DVP-14 BOARD

Ref. No. or Q'ty	Part No.	SP	Description
1pc	A-8321-483-A	o	MOUNTED CIRCUIT BOARD, DVP-14
C100	1-164-156-11	s	CERAMIC, CHIP 0.1uF 25V
C101	1-113-682-11	s	TANTALUM, CHIP 33uF 20% 10V
C102	1-164-227-11	s	CERAMIC, CHIP 0.022uF 10% 25V
C103	1-162-964-11	s	CERAMIC, CHIP 0.001uF 10% 50V
C104	1-164-230-11	s	CERAMIC 220PF 5% 50V
C105	1-164-156-11	s	CERAMIC, CHIP 0.1uF 25V
C106	1-104-852-11	s	TANTALUM, CHIP 22uF 20% 10V
C107	1-162-970-11	s	CERAMIC, CHIP 0.01uF 10% 25V
C108	1-104-852-11	s	TANTALUM, CHIP 22uF 20% 10V
C109	1-164-227-11	s	CERAMIC, CHIP 0.022uF 10% 25V
C110	1-164-156-11	s	CERAMIC, CHIP 0.1uF 25V
C111	1-113-991-11	s	TANTALUM, CHIP 33uF 20% 16V
C112	1-164-227-11	s	CERAMIC, CHIP 0.022uF 10% 25V
C113	1-164-227-11	s	CERAMIC, CHIP 0.022uF 10% 25V
C114	1-164-227-11	s	CERAMIC, CHIP 0.022uF 10% 25V
C115	1-164-227-11	s	CERAMIC, CHIP 0.022uF 10% 25V
C116	1-113-991-11	s	TANTALUM, CHIP 33uF 20% 16V
C117	1-164-156-11	s	CERAMIC, CHIP 0.1uF 25V
C118	1-164-227-11	s	CERAMIC, CHIP 0.022uF 10% 25V
C119	1-164-227-11	s	CERAMIC, CHIP 0.022uF 10% 25V
C120	1-164-227-11	s	CERAMIC, CHIP 0.022uF 10% 25V
C121	1-164-227-11	s	CERAMIC, CHIP 0.022uF 10% 25V
C122	1-164-227-11	s	CERAMIC, CHIP 0.022uF 10% 25V
C123	1-164-227-11	s	CERAMIC, CHIP 0.022uF 10% 25V
C124	1-164-227-11	s	CERAMIC, CHIP 0.022uF 10% 25V
C125	1-164-227-11	s	CERAMIC, CHIP 0.022uF 10% 25V
C126	1-104-851-11	s	TANTALUM, CHIP 10uF 20% 10V
C127	1-104-851-11	s	TANTALUM, CHIP 10uF 20% 10V
C128	1-104-851-11	s	TANTALUM, CHIP 10uF 20% 10V
C129	1-164-156-11	s	CERAMIC, CHIP 0.1uF 25V
C130	1-164-156-11	s	CERAMIC, CHIP 0.1uF 25V
C131	1-164-156-11	s	CERAMIC, CHIP 0.1uF 25V
C132	1-113-991-11	s	TANTALUM, CHIP 33uF 20% 16V
C133	1-113-682-11	s	TANTALUM, CHIP 33uF 20% 10V
C134	1-164-156-11	s	CERAMIC, CHIP 0.1uF 25V
C135	1-164-156-11	s	CERAMIC, CHIP 0.1uF 25V
C136	1-164-156-11	s	CERAMIC, CHIP 0.1uF 25V
C137	1-164-156-11	s	CERAMIC, CHIP 0.1uF 25V
C138	1-113-682-11	s	TANTALUM, CHIP 33uF 20% 10V
C200	1-162-964-11	s	CERAMIC, CHIP 0.001uF 10% 50V
C201	1-164-156-11	s	CERAMIC, CHIP 0.1uF 25V
C202	1-164-156-11	s	CERAMIC, CHIP 0.1uF 25V
C203	1-164-156-11	s	CERAMIC, CHIP 0.1uF 25V
C204	1-164-156-11	s	CERAMIC, CHIP 0.1uF 25V
C205	1-164-156-11	s	CERAMIC, CHIP 0.1uF 25V
C206	1-104-852-11	s	TANTALUM, CHIP 22uF 20% 10V
C207	1-104-914-11	s	TANTALUM, CHIP 22uF 20% 16V
C208	1-104-851-11	s	TANTALUM, CHIP 10uF 20% 10V
C209	1-164-156-11	s	CERAMIC, CHIP 0.1uF 25V
C210	1-164-156-11	s	CERAMIC, CHIP 0.1uF 25V
C211	1-164-156-11	s	CERAMIC, CHIP 0.1uF 25V
C212	1-164-156-11	s	CERAMIC, CHIP 0.1uF 25V
C213	1-164-156-11	s	CERAMIC, CHIP 0.1uF 25V
C214	1-164-156-11	s	CERAMIC, CHIP 0.1uF 25V
C215	1-164-156-11	s	CERAMIC, CHIP 0.1uF 25V
C216	1-104-851-11	s	TANTALUM, CHIP 10uF 20% 10V
C217	1-104-851-11	s	TANTALUM, CHIP 10uF 20% 10V

(DVP-14 BOARD)

Ref. No. or Q'ty	Part No.	SP	Description
C218	1-104-852-11	s	TANTALUM, CHIP 22uF 20% 10V
C219	1-104-914-11	s	TANTALUM, CHIP 22uF 20% 16V
C220	1-164-156-11	s	CERAMIC, CHIP 0.1uF 25V
C221	1-164-227-11	s	CERAMIC, CHIP 0.022uF 10% 25V
C222	1-164-227-11	s	CERAMIC, CHIP 0.022uF 10% 25V
C223	1-164-156-11	s	CERAMIC, CHIP 0.1uF 25V
C224	1-164-156-11	s	CERAMIC, CHIP 0.1uF 25V
C300	1-164-156-11	s	CERAMIC, CHIP 0.1uF 25V
C301	1-164-156-11	s	CERAMIC, CHIP 0.1uF 25V
C302	1-164-156-11	s	CERAMIC, CHIP 0.1uF 25V
C303	1-164-156-11	s	CERAMIC, CHIP 0.1uF 25V
C304	1-164-156-11	s	CERAMIC, CHIP 0.1uF 25V
C305	1-164-156-11	s	CERAMIC, CHIP 0.1uF 25V
C306	1-164-156-11	s	CERAMIC, CHIP 0.1uF 25V
C307	1-162-915-11	s	CERAMIC, CHIP 10PF 50V
C308	1-164-156-11	s	CERAMIC, CHIP 0.1uF 25V
C309	1-164-156-11	s	CERAMIC, CHIP 0.1uF 25V
C310	1-164-156-11	s	CERAMIC, CHIP 0.1uF 25V
C311	1-164-156-11	s	CERAMIC, CHIP 0.1uF 25V
C312	1-164-156-11	s	CERAMIC, CHIP 0.1uF 25V
C313	1-164-156-11	s	CERAMIC, CHIP 0.1uF 25V
C314	1-164-156-11	s	CERAMIC, CHIP 0.1uF 25V
C315	1-164-156-11	s	CERAMIC, CHIP 0.1uF 25V
C316	1-164-156-11	s	CERAMIC, CHIP 0.1uF 25V
C317	1-164-156-11	s	CERAMIC, CHIP 0.1uF 25V
C318	1-164-156-11	s	CERAMIC, CHIP 0.1uF 25V
C319	1-164-156-11	s	CERAMIC, CHIP 0.1uF 25V
C320	1-164-156-11	s	CERAMIC, CHIP 0.1uF 25V
C321	1-164-156-11	s	CERAMIC, CHIP 0.1uF 25V
C322	1-164-156-11	s	CERAMIC, CHIP 0.1uF 25V
C323	1-164-156-11	s	CERAMIC, CHIP 0.1uF 25V
C324	1-164-156-11	s	CERAMIC, CHIP 0.1uF 25V
C325	1-162-915-11	s	CERAMIC, CHIP 10PF 50V
C326	1-162-915-11	s	CERAMIC, CHIP 10PF 50V
C327	1-164-156-11	s	CERAMIC, CHIP 0.1uF 25V
C328	1-104-851-11	s	TANTALUM, CHIP 10uF 20% 10V
C329	1-164-156-11	s	CERAMIC, CHIP 0.1uF 25V
C400	1-164-156-11	s	CERAMIC, CHIP 0.1uF 25V
C401	1-164-156-11	s	CERAMIC, CHIP 0.1uF 25V
C402	1-164-156-11	s	CERAMIC, CHIP 0.1uF 25V
C403	1-164-156-11	s	CERAMIC, CHIP 0.1uF 25V
C404	1-164-156-11	s	CERAMIC, CHIP 0.1uF 25V
C405	1-164-156-11	s	CERAMIC, CHIP 0.1uF 25V
C406	1-164-156-11	s	CERAMIC, CHIP 0.1uF 25V
C407	1-164-156-11	s	CERAMIC, CHIP 0.1uF 25V
C408	1-164-156-11	s	CERAMIC, CHIP 0.1uF 25V
C409	1-164-156-11	s	CERAMIC, CHIP 0.1uF 25V
C410	1-164-156-11	s	CERAMIC, CHIP 0.1uF 25V
C411	1-164-156-11	s	CERAMIC, CHIP 0.1uF 25V
C412	1-164-156-11	s	CERAMIC, CHIP 0.1uF 25V
C413	1-164-156-11	s	CERAMIC, CHIP 0.1uF 25V
C500	1-164-156-11	s	CERAMIC, CHIP 0.1uF 25V
C501	1-164-156-11	s	CERAMIC, CHIP 0.1uF 25V
C502	1-164-156-11	s	CERAMIC, CHIP 0.1uF 25V
C503	1-164-156-11	s	CERAMIC, CHIP 0.1uF 25V
C504	1-164-156-11	s	CERAMIC, CHIP 0.1uF 25V
C505	1-164-156-11	s	CERAMIC, CHIP 0.1uF 25V
C506	1-164-156-11	s	CERAMIC, CHIP 0.1uF 25V
C507	1-164-156-11	s	CERAMIC, CHIP 0.1uF 25V

(DVP-14 BOARD)

Ref. No. or Q'ty	Part No.	SP	Description
C508	1-164-156-11	s	CERAMIC, CHIP 0.1uF 25V
C509	1-164-156-11	s	CERAMIC, CHIP 0.1uF 25V
C510	1-164-156-11	s	CERAMIC, CHIP 0.1uF 25V
C511	1-164-156-11	s	CERAMIC, CHIP 0.1uF 25V
C512	1-164-156-11	s	CERAMIC, CHIP 0.1uF 25V
C513	1-164-156-11	s	CERAMIC, CHIP 0.1uF 25V
C514	1-164-156-11	s	CERAMIC, CHIP 0.1uF 25V
C515	1-164-156-11	s	CERAMIC, CHIP 0.1uF 25V
C516	1-164-156-11	s	CERAMIC, CHIP 0.1uF 25V
C517	1-164-156-11	s	CERAMIC, CHIP 0.1uF 25V
C518	1-164-156-11	s	CERAMIC, CHIP 0.1uF 25V
C519	1-164-156-11	s	CERAMIC, CHIP 0.1uF 25V
C520	1-164-156-11	s	CERAMIC, CHIP 0.1uF 25V
C521	1-164-156-11	s	CERAMIC, CHIP 0.1uF 25V
C522	1-164-156-11	s	CERAMIC, CHIP 0.1uF 25V
C523	1-104-851-11	s	TANTALUM, CHIP 10uF 20% 10V
C524	1-164-156-11	s	CERAMIC, CHIP 0.1uF 25V
C525	1-164-156-11	s	CERAMIC, CHIP 0.1uF 25V
C526	1-164-156-11	s	CERAMIC, CHIP 0.1uF 25V
C527	1-164-156-11	s	CERAMIC, CHIP 0.1uF 25V
C528	1-164-156-11	s	CERAMIC, CHIP 0.1uF 25V
C529	1-164-156-11	s	CERAMIC, CHIP 0.1uF 25V
C530	1-164-156-11	s	CERAMIC, CHIP 0.1uF 25V
C531	1-164-156-11	s	CERAMIC, CHIP 0.1uF 25V
C532	1-164-156-11	s	CERAMIC, CHIP 0.1uF 25V
C600	1-164-156-11	s	CERAMIC, CHIP 0.1uF 25V
C601	1-164-156-11	s	CERAMIC, CHIP 0.1uF 25V
C602	1-164-156-11	s	CERAMIC, CHIP 0.1uF 25V
C603	1-164-156-11	s	CERAMIC, CHIP 0.1uF 25V
C604	1-164-156-11	s	CERAMIC, CHIP 0.1uF 25V
C605	1-164-156-11	s	CERAMIC, CHIP 0.1uF 25V
C606	1-164-156-11	s	CERAMIC, CHIP 0.1uF 25V
C607	1-164-156-11	s	CERAMIC, CHIP 0.1uF 25V
C608	1-164-156-11	s	CERAMIC, CHIP 0.1uF 25V
C609	1-164-156-11	s	CERAMIC, CHIP 0.1uF 25V
C610	1-164-156-11	s	CERAMIC, CHIP 0.1uF 25V
C611	1-164-156-11	s	CERAMIC, CHIP 0.1uF 25V
C612	1-164-156-11	s	CERAMIC, CHIP 0.1uF 25V
C613	1-164-156-11	s	CERAMIC, CHIP 0.1uF 25V
C614	1-164-156-11	s	CERAMIC, CHIP 0.1uF 25V
C615	1-164-156-11	s	CERAMIC, CHIP 0.1uF 25V
C616	1-164-156-11	s	CERAMIC, CHIP 0.1uF 25V
C617	1-164-156-11	s	CERAMIC, CHIP 0.1uF 25V
C618	1-164-156-11	s	CERAMIC, CHIP 0.1uF 25V
C619	1-164-156-11	s	CERAMIC, CHIP 0.1uF 25V
C700	1-164-156-11	s	CERAMIC, CHIP 0.1uF 25V
C701	1-164-156-11	s	CERAMIC, CHIP 0.1uF 25V
C702	1-164-156-11	s	CERAMIC, CHIP 0.1uF 25V
C703	1-164-156-11	s	CERAMIC, CHIP 0.1uF 25V
C704	1-164-156-11	s	CERAMIC, CHIP 0.1uF 25V
C705	1-164-156-11	s	CERAMIC, CHIP 0.1uF 25V
C706	1-164-156-11	s	CERAMIC, CHIP 0.1uF 25V
C707	1-164-156-11	s	CERAMIC, CHIP 0.1uF 25V
C708	1-164-156-11	s	CERAMIC, CHIP 0.1uF 25V
C709	1-164-156-11	s	CERAMIC, CHIP 0.1uF 25V
C710	1-164-156-11	s	CERAMIC, CHIP 0.1uF 25V
C711	1-164-156-11	s	CERAMIC, CHIP 0.1uF 25V
C712	1-164-156-11	s	CERAMIC, CHIP 0.1uF 25V
C713	1-164-156-11	s	CERAMIC, CHIP 0.1uF 25V

(DVP-14 BOARD)

Ref. No. or Q'ty	Part No.	SP	Description
C714	1-164-156-11	s	CERAMIC, CHIP 0.1uF 25V
C715	1-164-156-11	s	CERAMIC, CHIP 0.1uF 25V
C716	1-164-156-11	s	CERAMIC, CHIP 0.1uF 25V
C717	1-164-156-11	s	CERAMIC, CHIP 0.1uF 25V
C718	1-164-156-11	s	CERAMIC, CHIP 0.1uF 25V
C719	1-164-156-11	s	CERAMIC, CHIP 0.1uF 25V
C720	1-164-156-11	s	CERAMIC, CHIP 0.1uF 25V
C721	1-164-156-11	s	CERAMIC, CHIP 0.1uF 25V
C722	1-164-156-11	s	CERAMIC, CHIP 0.1uF 25V
C723	1-164-156-11	s	CERAMIC, CHIP 0.1uF 25V
C724	1-164-156-11	s	CERAMIC, CHIP 0.1uF 25V
C725	1-164-156-11	s	CERAMIC, CHIP 0.1uF 25V
C726	1-164-156-11	s	CERAMIC, CHIP 0.1uF 25V
C727	1-164-156-11	s	CERAMIC, CHIP 0.1uF 25V
C728	1-164-156-11	s	CERAMIC, CHIP 0.1uF 25V
C729	1-164-156-11	s	CERAMIC, CHIP 0.1uF 25V
C730	1-164-156-11	s	CERAMIC, CHIP 0.1uF 25V
C731	1-164-156-11	s	CERAMIC, CHIP 0.1uF 25V
C732	1-164-156-11	s	CERAMIC, CHIP 0.1uF 25V
C733	1-164-156-11	s	CERAMIC, CHIP 0.1uF 25V
C734	1-164-156-11	s	CERAMIC, CHIP 0.1uF 25V
C735	1-164-156-11	s	CERAMIC, CHIP 0.1uF 25V
C736	1-164-156-11	s	CERAMIC, CHIP 0.1uF 25V
C737	1-164-156-11	s	CERAMIC, CHIP 0.1uF 25V
C738	1-164-156-11	s	CERAMIC, CHIP 0.1uF 25V
CN1	1-779-393-11	o	CONNECTOR, BOARD TO BOARD 100P
CN2	1-691-551-11	o	PIN, CONNECTOR (SMD) 8P
CN5	1-784-435-21	o	CONNECTOR, BOARD TO BOARD 30P
CP101	1-767-694-21	s	OSCILLATOR, CRYSTAL
FB101	1-543-309-21	s	BEAD, FERRITE
FL200	1-117-193-11	s	CERAMIC 1.5MF 50V
FL201	1-117-193-11	s	CERAMIC 1.5MF 50V
FL202	1-117-193-11	s	CERAMIC 1.5MF 50V
FL203	1-117-193-11	s	CERAMIC 1.5MF 50V
IC100	8-759-447-77	s	IC TC7WH74FU(TE12R)
IC101	8-759-295-09	s	IC TLC2932IPW
IC102	8-759-491-46	s	IC TC74VHCT04AFT(EL)
IC103	8-759-260-55	s	IC TLC272CPW-E05
IC104	8-759-524-50	s	IC TC74VHC541FT(EL)
IC105	8-759-599-91	s	IC CXD8821AQ
IC106	8-759-524-28	s	IC TC74VHC245FT(EL)
IC107	8-759-524-27	s	IC TC74VHC244FT(EL)
IC108	8-759-524-28	s	IC TC74VHC245FT(EL)
IC200	8-759-523-78	s	IC TC74VHC00FT(EL)
IC201	8-759-196-97	s	IC TC7SH32FU-TE85R
IC202	8-759-524-50	s	IC TC74VHC541FT(EL)
IC203	8-759-524-28	s	IC TC74VHC245FT(EL)
IC204	8-759-524-19	s	IC TC74VHC164FT(EL)
IC205	8-759-523-81	s	IC TC74VHC08FT(EL)
IC206	8-759-271-86	s	IC TC7SH04FU
IC207	8-759-523-78	s	IC TC74VHC00FT(EL)
IC208	8-759-523-95	s	IC TC74VHC74FT(EL)
IC209	8-729-024-50	s	TRANSISTOR SI9936DY
IC210	8-759-524-50	s	IC TC74VHC541FT(EL)
IC211	8-759-524-50	s	IC TC74VHC541FT(EL)
IC212	8-759-523-81	s	IC TC74VHC08FT(EL)
IC300	8-759-524-50	s	IC TC74VHC541FT(EL)

(DVP-14 BOARD)

Ref. No. or Q'ty	Part No.	SP	Description
IC301	8-759-421-88	s	IC SN74LVC821APW-E05
IC302	8-759-524-50	s	IC TC74VHC541FT(EL)
IC303	8-759-175-57	s	IC CXD8820AR
IC304	8-759-196-97	s	IC TC7SH32FU-TE85R
IC305	8-759-491-46	s	IC TC74VHCT04AFT(EL)
IC306	8-759-188-02	s	IC CXD8854Q
IC307	8-759-523-95	s	IC TC74VHC74FT(EL)
IC308	8-759-524-18	s	IC TC74VHC163FT(EL)
IC309	8-759-196-97	s	IC TC7SH32FU-TE85R
IC310	8-759-524-52	s	IC TC74VHC574FT(EL)
IC311	8-759-524-52	s	IC TC74VHC574FT(EL)
IC312	8-759-177-72	s	IC CXD8806R
IC313	8-759-523-96	s	IC TC74VHC86FT(EL)
IC314	8-759-524-50	s	IC TC74VHC541FT(EL)
IC400	8-759-559-78	s	IC UPD434008ALLE-A20
IC401	8-759-559-78	s	IC UPD434008ALLE-A20
IC402	8-759-559-78	s	IC UPD434008ALLE-A20
IC403	8-759-482-20	s	IC IDT71V124S15Y-TL
IC404	8-759-482-20	s	IC IDT71V124S15Y-TL
IC405	8-759-482-20	s	IC IDT71V124S15Y-TL
IC406	8-759-482-20	s	IC IDT71V124S15Y-TL
IC500	8-759-199-86	s	IC CXD8807BR
IC501	8-759-421-88	s	IC SN74LVC821APW-E05
IC503	8-759-559-78	s	IC UPD434008ALLE-A20
IC504	8-759-559-78	s	IC UPD434008ALLE-A20
IC505	8-759-559-78	s	IC UPD434008ALLE-A20
IC600	8-752-359-55	s	IC CXK48324R
IC601	8-752-359-55	s	IC CXK48324R
IC602	8-752-359-55	s	IC CXK48324R
IC603	8-752-359-55	s	IC CXK48324R
IC604	8-752-359-55	s	IC CXK48324R
IC700	8-759-524-50	s	IC TC74VHC541FT(EL)
IC701	8-759-524-50	s	IC TC74VHC541FT(EL)
IC702	8-759-524-50	s	IC TC74VHC541FT(EL)
IC703	8-759-325-89	s	IC CXD8928R
IC704	8-759-482-20	s	IC IDT71V124S15Y-TL
IC705	8-759-482-20	s	IC IDT71V124S15Y-TL
IC707	8-759-482-20	s	IC IDT71V124S15Y-TL
IC708	8-759-482-20	s	IC IDT71V124S15Y-TL
IC709	8-759-325-88	s	IC CXD8929R
IC710	8-759-177-49	s	IC HM62W9127HJP-35Z
IC711	8-759-177-49	s	IC HM62W9127HJP-35Z
L101	1-410-393-11	s	INDUCTOR, CHIP 100uH
L102	1-410-803-11	s	INDUCTOR CHIP 47uH
L103	1-410-803-11	s	INDUCTOR CHIP 47uH
L104	1-410-803-11	s	INDUCTOR CHIP 47uH
L105	1-410-807-11	s	INDUCTOR CHIP 0.1uH
L200	1-410-807-11	s	INDUCTOR CHIP 0.1uH
L201	1-410-807-11	s	INDUCTOR CHIP 0.1uH
L202	1-410-807-11	s	INDUCTOR CHIP 0.1uH
L300	1-410-807-11	s	INDUCTOR CHIP 0.1uH
L700	1-410-807-11	s	INDUCTOR CHIP 0.1uH
L701	1-410-807-11	s	INDUCTOR CHIP 0.1uH
Q200	8-729-029-14	s	TRANSISTOR DTC144EUA-T106
Q201	8-729-029-14	s	TRANSISTOR DTC144EUA-T106
R100	1-218-644-11	s	METAL, CHIP 10 0.50% 1/16W
R101	1-218-740-11	s	METAL, CHIP 100K 0.50% 1/16W

(DVP-14 BOARD)

Ref. No. or Q'ty	Part No.	SP	Description
R102	1-216-857-11	s	METAL, CHIP 1M 5% 1/16W
R104	1-218-692-11	s	METAL, CHIP 1K 0.50% 1/16W
R105	1-218-740-11	s	METAL, CHIP 100K 0.50% 1/16W
R106	1-218-724-11	s	METAL, CHIP 22K 5% 1/16W
R107	1-218-724-11	s	METAL, CHIP 22K 5% 1/16W
R108	1-218-740-11	s	METAL, CHIP 100K 0.50% 1/16W
R110	1-216-809-11	s	METAL, CHIP 100 5% 1/16W
R111	1-218-708-11	s	METAL, CHIP 4.7K 0.50% 1/16W
R112	1-218-668-11	s	METAL, CHIP 100 0.50% 1/16W
R113	1-218-719-11	s	METAL, CHIP 13K 0.50% 1/16W
R115	1-216-864-11	s	METAL, CHIP 0 5% 1/16W
R116	1-216-845-11	s	METAL, CHIP 100K 5% 1/16W
R117	1-216-864-11	s	METAL, CHIP 0 5% 1/16W
R118	1-216-845-11	s	METAL, CHIP 100K 5% 1/16W
R119	1-218-732-11	s	METAL, CHIP 47K 0.50% 1/16W
R120	1-216-864-11	s	METAL, CHIP 0 5% 1/16W
R121	1-216-805-11	s	METAL, CHIP 47 5% 1/16W
R122	1-216-801-11	s	METAL, CHIP 22 5% 1/16W
R123	1-216-805-11	s	METAL, CHIP 47 5% 1/16W
R124	1-218-660-91	s	METAL, CHIP 47 0.50% 1/16W
R125	1-216-801-11	s	METAL, CHIP 22 5% 1/16W
R126	1-218-668-11	s	METAL, CHIP 100 0.50% 1/16W
R127	1-218-668-11	s	METAL, CHIP 100 0.50% 1/16W
R128	1-218-668-11	s	METAL, CHIP 100 0.50% 1/16W
R129	1-218-668-11	s	METAL, CHIP 100 0.50% 1/16W
R130	1-216-864-11	s	METAL, CHIP 0 5% 1/16W
R131	1-216-864-11	s	METAL, CHIP 0 5% 1/16W
R132	1-216-864-11	s	METAL, CHIP 0 5% 1/16W
R133	1-216-864-11	s	METAL, CHIP 0 5% 1/16W
R134	1-218-660-91	s	METAL, CHIP 47 0.50% 1/16W
R135	1-218-660-91	s	METAL, CHIP 47 0.50% 1/16W
R136	1-216-864-11	s	METAL, CHIP 0 5% 1/16W
R137	1-218-652-11	s	METAL, CHIP 22 0.50% 1/16W
R138	1-218-668-11	s	METAL, CHIP 100 0.50% 1/16W
R139	1-218-652-11	s	METAL, CHIP 22 0.50% 1/16W
R141	1-216-864-11	s	METAL, CHIP 0 5% 1/16W
R142	1-216-809-11	s	METAL, CHIP 100 5% 1/16W
R143	1-216-809-11	s	METAL, CHIP 100 5% 1/16W
R144	1-216-809-11	s	METAL, CHIP 100 5% 1/16W
R145	1-216-809-11	s	METAL, CHIP 100 5% 1/16W
R146	1-216-809-11	s	METAL, CHIP 100 5% 1/16W
R147	1-216-864-11	s	METAL, CHIP 0 5% 1/16W
R148	1-218-644-11	s	METAL, CHIP 10 0.50% 1/16W
R149	1-216-864-11	s	METAL, CHIP 0 5% 1/16W
R150	1-216-864-11	s	METAL, CHIP 0 5% 1/16W
R151	1-216-864-11	s	METAL, CHIP 0 5% 1/16W
R152	1-216-864-11	s	METAL, CHIP 0 5% 1/16W
R153	1-216-864-11	s	METAL, CHIP 0 5% 1/16W
R154	1-216-864-11	s	METAL, CHIP 0 5% 1/16W
R155	1-218-660-91	s	METAL, CHIP 47 0.50% 1/16W
R156	1-218-748-11	s	METAL, CHIP 220K 0.50% 1/16W
R200	1-216-845-11	s	METAL, CHIP 100K 5% 1/16W
R201	1-218-740-11	s	METAL, CHIP 100K 0.50% 1/16W
R202	1-216-845-11	s	METAL, CHIP 100K 5% 1/16W
R203	1-216-845-11	s	METAL, CHIP 100K 5% 1/16W
R204	1-218-740-11	s	METAL, CHIP 100K 0.50% 1/16W
R207	1-216-864-11	s	METAL, CHIP 0 5% 1/16W
R208	1-216-864-11	s	METAL, CHIP 0 5% 1/16W
R209	1-216-864-11	s	METAL, CHIP 0 5% 1/16W

(DVP-14 BOARD)

Ref. No. or Q'ty	Part No.	SP	Description
R210	1-216-864-11	s	METAL, CHIP 0 5% 1/16W
R211	1-216-864-11	s	METAL, CHIP 0 5% 1/16W
R212	1-216-864-11	s	METAL, CHIP 0 5% 1/16W
R300	1-216-864-11	s	METAL, CHIP 0 5% 1/16W
R301	1-218-644-11	s	METAL, CHIP 10 0.50% 1/16W
R303	1-216-864-11	s	METAL, CHIP 0 5% 1/16W
R305	1-216-864-11	s	METAL, CHIP 0 5% 1/16W
R306	1-218-676-11	s	METAL, CHIP 220 0.50% 1/16W
R307	1-218-748-11	s	METAL, CHIP 220K 0.50% 1/16W
R308	1-216-864-11	s	METAL, CHIP 0 5% 1/16W
R310	1-216-805-11	s	METAL, CHIP 47 5% 1/16W
R311	1-216-805-11	s	METAL, CHIP 47 5% 1/16W
R312	1-218-660-91	s	METAL, CHIP 47 0.50% 1/16W
R313	1-218-660-91	s	METAL, CHIP 47 0.50% 1/16W
R400	1-216-864-11	s	METAL, CHIP 0 5% 1/16W
R401	1-216-864-11	s	METAL, CHIP 0 5% 1/16W
R402	1-216-864-11	s	METAL, CHIP 0 5% 1/16W
R500	1-216-864-11	s	METAL, CHIP 0 5% 1/16W
R501	1-216-864-11	s	METAL, CHIP 0 5% 1/16W
R502	1-218-668-11	s	METAL, CHIP 100 0.50% 1/16W
R503	1-218-668-11	s	METAL, CHIP 100 0.50% 1/16W
R504	1-216-864-11	s	METAL, CHIP 0 5% 1/16W
R505	1-216-864-11	s	METAL, CHIP 0 5% 1/16W
R506	1-216-864-11	s	METAL, CHIP 0 5% 1/16W
R510	1-216-864-11	s	METAL, CHIP 0 5% 1/16W
R700	1-216-864-11	s	METAL, CHIP 0 5% 1/16W
R701	1-216-864-11	s	METAL, CHIP 0 5% 1/16W
R704	1-218-692-11	s	METAL, CHIP 1K 0.50% 1/16W
R705	1-216-864-11	s	METAL, CHIP 0 5% 1/16W
R706	1-216-864-11	s	METAL, CHIP 0 5% 1/16W
R707	1-216-864-11	s	METAL, CHIP 0 5% 1/16W
R708	1-216-864-11	s	METAL, CHIP 0 5% 1/16W
RB101	1-239-444-11	s	RESUSTIR BLOCK, CHIP 220K
RB200	1-236-907-11	s	RESISTOR BLOCK, CHIP 100KX4
RB201	1-236-907-11	s	RESISTOR BLOCK, CHIP 100KX4
RB202	1-236-907-11	s	RESISTOR BLOCK, CHIP 100KX4
RB203	1-239-412-11	s	NETWORK RESISTOR (CHIP) 100
RB204	1-239-412-11	s	NETWORK RESISTOR (CHIP) 100
RB205	1-236-907-11	s	RESISTOR BLOCK, CHIP 100KX4
RB206	1-236-907-11	s	RESISTOR BLOCK, CHIP 100KX4
RB207	1-236-907-11	s	RESISTOR BLOCK, CHIP 100KX4
RB208	1-236-907-11	s	RESISTOR BLOCK, CHIP 100KX4
RB209	1-236-907-11	s	RESISTOR BLOCK, CHIP 100KX4
RB210	1-236-907-11	s	RESISTOR BLOCK, CHIP 100KX4
RB211	1-236-907-11	s	RESISTOR BLOCK, CHIP 100KX4
RB212	1-236-907-11	s	RESISTOR BLOCK, CHIP 100KX4
RB213	1-239-412-11	s	NETWORK RESISTOR (CHIP) 100
RB214	1-236-907-11	s	RESISTOR BLOCK, CHIP 100KX4
RB215	1-236-907-11	s	RESISTOR BLOCK, CHIP 100KX4
RB216	1-236-907-11	s	RESISTOR BLOCK, CHIP 100KX4
RB300	1-236-907-11	s	RESISTOR BLOCK, CHIP 100KX4
RB301	1-236-907-11	s	RESISTOR BLOCK, CHIP 100KX4
RB302	1-236-907-11	s	RESISTOR BLOCK, CHIP 100KX4
RB303	1-236-907-11	s	RESISTOR BLOCK, CHIP 100KX4
RB304	1-236-907-11	s	RESISTOR BLOCK, CHIP 100KX4
RB305	1-236-907-11	s	RESISTOR BLOCK, CHIP 100KX4
RB306	1-236-907-11	s	RESISTOR BLOCK, CHIP 100KX4
RB307	1-236-907-11	s	RESISTOR BLOCK, CHIP 100KX4

(DVP-14 BOARD)

Ref. No. or Q'ty	Part No.	SP	Description
RB308	1-236-907-11	s	RESISTOR BLOCK, CHIP 100KX4
RB309	1-236-907-11	s	RESISTOR BLOCK, CHIP 100KX4
RB310	1-236-907-11	s	RESISTOR BLOCK, CHIP 100KX4
RB311	1-236-907-11	s	RESISTOR BLOCK, CHIP 100KX4
RB315	1-239-409-11	s	RESISTOR BLOCK, CHIP 47X4
RB316	1-239-409-11	s	RESISTOR BLOCK, CHIP 47X4
RB317	1-239-409-11	s	RESISTOR BLOCK, CHIP 47X4
RB318	1-239-409-11	s	RESISTOR BLOCK, CHIP 47X4
RB400	1-239-430-11	s	NETWORK RESISTOR (CHIP) 4.7K
RB500	1-239-412-11	s	NETWORK RESISTOR (CHIP) 100
RB501	1-239-412-11	s	NETWORK RESISTOR (CHIP) 100
RB600	1-236-904-11	s	RESISTOR BLOCK, CHIP 1KX4
RB601	1-236-904-11	s	RESISTOR BLOCK, CHIP 1KX4
RB602	1-236-904-11	s	RESISTOR BLOCK, CHIP 1KX4
RB603	1-236-904-11	s	RESISTOR BLOCK, CHIP 1KX4
RB604	1-236-904-11	s	RESISTOR BLOCK, CHIP 1KX4
RB605	1-236-904-11	s	RESISTOR BLOCK, CHIP 1KX4
RB606	1-236-904-11	s	RESISTOR BLOCK, CHIP 1KX4
RB607	1-236-904-11	s	RESISTOR BLOCK, CHIP 1KX4
RB608	1-236-904-11	s	RESISTOR BLOCK, CHIP 1KX4
RB609	1-236-904-11	s	RESISTOR BLOCK, CHIP 1KX4
RB610	1-236-904-11	s	RESISTOR BLOCK, CHIP 1KX4
RB611	1-236-904-11	s	RESISTOR BLOCK, CHIP 1KX4
RB612	1-236-904-11	s	RESISTOR BLOCK, CHIP 1KX4
RB613	1-236-904-11	s	RESISTOR BLOCK, CHIP 1KX4
RB614	1-236-904-11	s	RESISTOR BLOCK, CHIP 1KX4
RB700	1-236-907-11	s	RESISTOR BLOCK, CHIP 100KX4
RB701	1-236-907-11	s	RESISTOR BLOCK, CHIP 100KX4
RB702	1-236-907-11	s	RESISTOR BLOCK, CHIP 100KX4
RB703	1-239-409-11	s	RESISTOR BLOCK, CHIP 47X4
RB704	1-239-409-11	s	RESISTOR BLOCK, CHIP 47X4
RB705	1-236-907-11	s	RESISTOR BLOCK, CHIP 100KX4
RB706	1-236-907-11	s	RESISTOR BLOCK, CHIP 100KX4
RB707	1-236-907-11	s	RESISTOR BLOCK, CHIP 100KX4

DVP-17 BOARD

Ref. No. or Q'ty	Part No.	SP	Description
1pc	A-8321-452-A	o	MOUNTED CIRCUIT BOARD, DVP-17
5pcs	3-729-061-01	s	SCREW (M2X4.5) (TYPE 1)
2pcs	3-603-737-02	o	LEVER,BOARD
C1	1-164-156-11	s	CERAMIC, CHIP 0.1uF 25V
C2	1-115-581-11	s	TANTALUM, CHIP 100uF 20% 16
C3	1-164-156-11	s	CERAMIC, CHIP 0.1uF 25V
C4	1-164-156-11	s	CERAMIC, CHIP 0.1uF 25V
C5	1-115-581-11	s	TANTALUM, CHIP 100uF 20% 16
C6	1-164-156-11	s	CERAMIC, CHIP 0.1uF 25V
C7	1-115-581-11	s	TANTALUM, CHIP 100uF 20% 16
C8	1-164-156-11	s	CERAMIC, CHIP 0.1uF 25V
C9	1-104-919-11	s	TANTALUM, CHIP 10uF 20% 25V
C10	1-107-826-91	s	CERAMIC 0.1uF 10% 16V
C11	1-135-177-21	s	TANTALUM, CHIP 1uF 10% 25V
C20	1-164-156-11	s	CERAMIC, CHIP 0.1uF 25V
C21	1-107-686-11	s	TANTALUM, CHIP 4.7uF 20% 16V
C22	1-115-581-11	s	TANTALUM, CHIP 100uF 20% 16
C23	1-164-156-11	s	CERAMIC, CHIP 0.1uF 25V
C24	1-164-156-11	s	CERAMIC, CHIP 0.1uF 25V
C25	1-104-852-11	s	TANTALUM, CHIP 22uF 20% 10V
C26	1-164-156-11	s	CERAMIC, CHIP 0.1uF 25V
C27	1-164-156-11	s	CERAMIC, CHIP 0.1uF 25V
C28	1-104-913-11	s	TANTALUM, CHIP 10uF 20% 16V
C29	1-162-917-11	s	CERAMIC, CHIP 15PF 5% 50V
C30	1-162-917-11	s	CERAMIC, CHIP 15PF 5% 50V
C31	1-164-156-11	s	CERAMIC, CHIP 0.1uF 25V
C32	1-164-156-11	s	CERAMIC, CHIP 0.1uF 25V
C33	1-104-913-11	s	TANTALUM, CHIP 10uF 20% 16V
C34	1-104-913-11	s	TANTALUM, CHIP 10uF 20% 16V
C35	1-164-156-11	s	CERAMIC, CHIP 0.1uF 25V
C36	1-164-156-11	s	CERAMIC, CHIP 0.1uF 25V
C37	1-104-913-11	s	TANTALUM, CHIP 10uF 20% 16V
C38	1-164-156-11	s	CERAMIC, CHIP 0.1uF 25V
C39	1-104-913-11	s	TANTALUM, CHIP 10uF 20% 16V
C40	1-164-156-11	s	CERAMIC, CHIP 0.1uF 25V
C41	1-162-915-11	s	CERAMIC, CHIP 10PF 50V
C42	1-162-915-11	s	CERAMIC, CHIP 10PF 50V
C43	1-164-156-11	s	CERAMIC, CHIP 0.1uF 25V
C44	1-164-227-11	s	CERAMIC, CHIP 0.022uF 10% 25V
C45	1-164-156-11	s	CERAMIC, CHIP 0.1uF 25V
C46	1-104-851-11	s	TANTALUM, CHIP 10uF 20% 10V
C47	1-164-156-11	s	CERAMIC, CHIP 0.1uF 25V
C48	1-164-156-11	s	CERAMIC, CHIP 0.1uF 25V
C49	1-164-156-11	s	CERAMIC, CHIP 0.1uF 25V
C50	1-164-156-11	s	CERAMIC, CHIP 0.1uF 25V
C51	1-164-156-11	s	CERAMIC, CHIP 0.1uF 25V
C52	1-164-156-11	s	CERAMIC, CHIP 0.1uF 25V
C53	1-164-156-11	s	CERAMIC, CHIP 0.1uF 25V
C54	1-164-156-11	s	CERAMIC, CHIP 0.1uF 25V
C55	1-164-156-11	s	CERAMIC, CHIP 0.1uF 25V
C56	1-164-156-11	s	CERAMIC, CHIP 0.1uF 25V
C150	1-162-915-11	s	CERAMIC, CHIP 10PF 50V
C151	1-162-915-11	s	CERAMIC, CHIP 10PF 50V
C152	1-162-915-11	s	CERAMIC, CHIP 10PF 50V
C153	1-162-915-11	s	CERAMIC, CHIP 10PF 50V
C154	1-104-913-11	s	TANTALUM, CHIP 10uF 20% 16V
C155	1-164-156-11	s	CERAMIC, CHIP 0.1uF 25V
C156	1-162-915-11	s	CERAMIC, CHIP 10PF 50V

(DVP-17 BOARD)

Ref. No. or Q'ty	Part No.	SP	Description
C157	1-162-915-11	s	CERAMIC, CHIP 10PF 50V
C158	1-164-156-11	s	CERAMIC, CHIP 0.1uF 25V
C159	1-104-913-11	s	TANTALUM, CHIP 10uF 20% 16V
C160	1-164-156-11	s	CERAMIC, CHIP 0.1uF 25V
C161	1-104-913-11	s	TANTALUM, CHIP 10uF 20% 16V
C162	1-164-156-11	s	CERAMIC, CHIP 0.1uF 25V
C163	1-164-156-11	s	CERAMIC, CHIP 0.1uF 25V
C164	1-164-156-11	s	CERAMIC, CHIP 0.1uF 25V
C165	1-164-156-11	s	CERAMIC, CHIP 0.1uF 25V
C166	1-164-156-11	s	CERAMIC, CHIP 0.1uF 25V
C167	1-164-156-11	s	CERAMIC, CHIP 0.1uF 25V
C200	1-164-227-11	s	CERAMIC, CHIP 0.022uF 10% 25V
C201	1-164-227-11	s	CERAMIC, CHIP 0.022uF 10% 25V
C202	1-164-227-11	s	CERAMIC, CHIP 0.022uF 10% 25V
C203	1-115-467-11	s	CERAMIC 0.22uF 10% 10V
C204	1-115-467-11	s	CERAMIC 0.22uF 10% 10V
C205	1-115-467-11	s	CERAMIC 0.22uF 10% 10V
C206	1-115-467-11	s	CERAMIC 0.22uF 10% 10V
C207	1-115-467-11	s	CERAMIC 0.22uF 10% 10V
C208	1-115-467-11	s	CERAMIC 0.22uF 10% 10V
C209	1-104-914-11	s	TANTALUM, CHIP 22uF 20% 16V
C210	1-104-914-11	s	TANTALUM, CHIP 22uF 20% 16V
C211	1-104-914-11	s	TANTALUM, CHIP 22uF 20% 16V
C212	1-104-914-11	s	TANTALUM, CHIP 22uF 20% 16V
C213	1-104-914-11	s	TANTALUM, CHIP 22uF 20% 16V
C214	1-104-914-11	s	TANTALUM, CHIP 22uF 20% 16V
C215	1-104-914-11	s	TANTALUM, CHIP 22uF 20% 16V
C216	1-104-914-11	s	TANTALUM, CHIP 22uF 20% 16V
C217	1-104-919-11	s	TANTALUM, CHIP 10uF 20% 25V
C218	1-104-852-11	s	TANTALUM, CHIP 22uF 20% 10V
C219	1-104-852-11	s	TANTALUM, CHIP 22uF 20% 10V
C220	1-104-914-11	s	TANTALUM, CHIP 22uF 20% 16V
C221	1-104-914-11	s	TANTALUM, CHIP 22uF 20% 16V
C222	1-107-826-91	s	CERAMIC 0.1uF 10% 16V
C223	1-107-826-91	s	CERAMIC 0.1uF 10% 16V
C224	1-107-826-91	s	CERAMIC 0.1uF 10% 16V
C225	1-164-315-11	s	CERAMIC, CHIP 470PF 5% 50V
C226	1-107-826-91	s	CERAMIC 0.1uF 10% 16V
C227	1-164-315-11	s	CERAMIC, CHIP 470PF 5% 50V
C228	1-162-970-11	s	CERAMIC, CHIP 0.01uF 10% 25V
C229	1-162-970-11	s	CERAMIC, CHIP 0.01uF 10% 25V
C230	1-164-315-11	s	CERAMIC, CHIP 470PF 5% 50V
C231	1-164-315-11	s	CERAMIC, CHIP 470PF 5% 50V
C232	1-107-826-91	s	CERAMIC 0.1uF 10% 16V
C233	1-162-922-11	s	CERAMIC, CHIP 39PF 5% 50V
C234	1-164-227-11	s	CERAMIC, CHIP 0.022uF 10% 25V
C235	1-107-826-91	s	CERAMIC 0.1uF 10% 16V
C236	1-162-922-11	s	CERAMIC, CHIP 39PF 5% 50V
C237	1-162-922-11	s	CERAMIC, CHIP 39PF 5% 50V
C238	1-162-922-11	s	CERAMIC, CHIP 39PF 5% 50V
C239	1-107-826-91	s	CERAMIC 0.1uF 10% 16V
C240	1-162-970-11	s	CERAMIC, CHIP 0.01uF 10% 25V
C241	1-107-826-91	s	CERAMIC 0.1uF 10% 16V
C242	1-162-970-11	s	CERAMIC, CHIP 0.01uF 10% 25V
C243	1-162-970-11	s	CERAMIC, CHIP 0.01uF 10% 25V
C244	1-162-970-11	s	CERAMIC, CHIP 0.01uF 10% 25V
C245	1-164-315-11	s	CERAMIC, CHIP 470PF 5% 50V
C246	1-164-315-11	s	CERAMIC, CHIP 470PF 5% 50V
C247	1-164-315-11	s	CERAMIC, CHIP 470PF 5% 50V

(DVP-17 BOARD)

Ref. No. or Q'ty	Part No.	SP	Description
C248	1-164-315-11	s	CERAMIC, CHIP 470PF 5% 50V
C249	1-107-826-91	s	CERAMIC 0.1uF 10% 16V
C250	1-107-826-91	s	CERAMIC 0.1uF 10% 16V
C251	1-107-826-91	s	CERAMIC 0.1uF 10% 16V
C252	1-107-826-91	s	CERAMIC 0.1uF 10% 16V
C253	1-162-970-11	s	CERAMIC, CHIP 0.01uF 10% 25V
C254	1-107-826-91	s	CERAMIC 0.1uF 10% 16V
C255	1-164-227-11	s	CERAMIC, CHIP 0.022uF 10% 25V
C256	1-164-227-11	s	CERAMIC, CHIP 0.022uF 10% 25V
C257	1-164-227-11	s	CERAMIC, CHIP 0.022uF 10% 25V
C258	1-164-156-11	s	CERAMIC, CHIP 0.1uF 25V
C259	1-164-156-11	s	CERAMIC, CHIP 0.1uF 25V
C260	1-162-908-11	s	CERAMIC, CHIP 3PF 50V
C261	1-162-908-11	s	CERAMIC, CHIP 3PF 50V
C263	1-162-927-11	s	CERAMIC, CHIP 100PF 5% 50V
C264	1-162-927-11	s	CERAMIC, CHIP 100PF 5% 50V
C265	1-107-826-91	s	CERAMIC 0.1uF 10% 16V
C266	1-164-315-11	s	CERAMIC, CHIP 470PF 5% 50V
C267	1-107-826-91	s	CERAMIC 0.1uF 10% 16V
C268	1-164-315-11	s	CERAMIC, CHIP 470PF 5% 50V
C269	1-107-826-91	s	CERAMIC 0.1uF 10% 16V
C270	1-107-826-91	s	CERAMIC 0.1uF 10% 16V
C271	1-107-826-91	s	CERAMIC 0.1uF 10% 16V
C272	1-162-970-11	s	CERAMIC, CHIP 0.01uF 10% 25V
C273	1-107-826-91	s	CERAMIC 0.1uF 10% 16V
C274	1-162-970-11	s	CERAMIC, CHIP 0.01uF 10% 25V
C275	1-164-217-11	s	CERAMIC, CHIP 150PF 5% 50V
C276	1-164-227-11	s	CERAMIC, CHIP 0.022uF 10% 25V
C277	1-107-826-91	s	CERAMIC 0.1uF 10% 16V
C278	1-164-230-11	s	CERAMIC 220PF 5% 50V
C279	1-162-964-11	s	CERAMIC, CHIP 0.001uF 10% 50V
C280	1-162-964-11	s	CERAMIC, CHIP 0.001uF 10% 50V
C281	1-107-826-91	s	CERAMIC 0.1uF 10% 16V
C282	1-107-826-91	s	CERAMIC 0.1uF 10% 16V
C283	1-162-970-11	s	CERAMIC, CHIP 0.01uF 10% 25V
C284	1-162-970-11	s	CERAMIC, CHIP 0.01uF 10% 25V
C285	1-164-156-11	s	CERAMIC, CHIP 0.1uF 25V
C286	1-164-156-11	s	CERAMIC, CHIP 0.1uF 25V
C287	1-164-156-11	s	CERAMIC, CHIP 0.1uF 25V
C288	1-164-156-11	s	CERAMIC, CHIP 0.1uF 25V
C289	1-162-927-11	s	CERAMIC, CHIP 100PF 5% 50V
C290	1-162-927-11	s	CERAMIC, CHIP 100PF 5% 50V
C291	1-162-927-11	s	CERAMIC, CHIP 100PF 5% 50V
C292	1-162-927-11	s	CERAMIC, CHIP 100PF 5% 50V
C293	1-162-927-11	s	CERAMIC, CHIP 100PF 5% 50V
C294	1-162-927-11	s	CERAMIC, CHIP 100PF 5% 50V
C295	1-164-156-11	s	CERAMIC, CHIP 0.1uF 25V
C296	1-107-826-91	s	CERAMIC 0.1uF 10% 16V
C297	1-164-227-11	s	CERAMIC, CHIP 0.022uF 10% 25V
C298	1-164-227-11	s	CERAMIC, CHIP 0.022uF 10% 25V
C299	1-164-227-11	s	CERAMIC, CHIP 0.022uF 10% 25V
C300	1-162-967-11	s	CERAMIC, CHIP 0.0033uF 10% 50V
C301	1-162-967-11	s	CERAMIC, CHIP 0.0033uF 10% 50V
C303	1-164-156-11	s	CERAMIC, CHIP 0.1uF 25V
C304	1-164-156-11	s	CERAMIC, CHIP 0.1uF 25V
C305	1-107-826-91	s	CERAMIC 0.1uF 10% 16V
C306	1-107-826-91	s	CERAMIC 0.1uF 10% 16V
C307	1-162-970-11	s	CERAMIC, CHIP 0.01uF 10% 25V
C308	1-162-970-11	s	CERAMIC, CHIP 0.01uF 10% 25V

(DVP-17 BOARD)

Ref. No. or Q'ty	Part No.	SP	Description
C309	1-107-826-91	s	CERAMIC 0.1uF 10% 16V
C310	1-107-826-91	s	CERAMIC 0.1uF 10% 16V
C311	1-162-970-11	s	CERAMIC, CHIP 0.01uF 10% 25V
C312	1-162-970-11	s	CERAMIC, CHIP 0.01uF 10% 25V
C313	1-162-919-11	s	CERAMIC, CHIP 22PF 5% 50V
C314	1-162-922-11	s	CERAMIC, CHIP 39PF 5% 50V
C315	1-162-922-11	s	CERAMIC, CHIP 39PF 5% 50V
C316	1-162-970-11	s	CERAMIC, CHIP 0.01uF 10% 25V
C317	1-162-970-11	s	CERAMIC, CHIP 0.01uF 10% 25V
C318	1-162-970-11	s	CERAMIC, CHIP 0.01uF 10% 25V
C319	1-107-826-91	s	CERAMIC 0.1uF 10% 16V
C320	1-107-826-91	s	CERAMIC 0.1uF 10% 16V
C321	1-107-826-91	s	CERAMIC 0.1uF 10% 16V
C322	1-107-826-91	s	CERAMIC 0.1uF 10% 16V
C323	1-107-826-91	s	CERAMIC 0.1uF 10% 16V
C324	1-107-826-91	s	CERAMIC 0.1uF 10% 16V
C325	1-164-217-11	s	CERAMIC, CHIP 150PF 5% 50V
C326	1-164-230-11	s	CERAMIC 220PF 5% 50V
C327	1-164-156-11	s	CERAMIC, CHIP 0.1uF 25V
C328	1-162-967-11	s	CERAMIC, CHIP 0.0033uF 10% 50V
C329	1-162-967-11	s	CERAMIC, CHIP 0.0033uF 10% 50V
C330	1-162-927-11	s	CERAMIC, CHIP 100PF 5% 50V
C331	1-162-927-11	s	CERAMIC, CHIP 100PF 5% 50V
C332	1-107-826-91	s	CERAMIC 0.1uF 10% 16V
C333	1-107-826-91	s	CERAMIC 0.1uF 10% 16V
C334	1-107-826-91	s	CERAMIC 0.1uF 10% 16V
C335	1-107-826-91	s	CERAMIC 0.1uF 10% 16V
C360	1-164-227-11	s	CERAMIC, CHIP 0.022uF 10% 25V
C361	1-107-826-91	s	CERAMIC 0.1uF 10% 16V
C362	1-107-826-91	s	CERAMIC 0.1uF 10% 16V
C363	1-164-315-11	s	CERAMIC, CHIP 470PF 5% 50V
C364	1-107-826-91	s	CERAMIC 0.1uF 10% 16V
C365	1-164-315-11	s	CERAMIC, CHIP 470PF 5% 50V
C366	1-162-970-11	s	CERAMIC, CHIP 0.01uF 10% 25V
C367	1-162-970-11	s	CERAMIC, CHIP 0.01uF 10% 25V
C368	1-164-315-11	s	CERAMIC, CHIP 470PF 5% 50V
C369	1-164-315-11	s	CERAMIC, CHIP 470PF 5% 50V
C370	1-162-922-11	s	CERAMIC, CHIP 39PF 5% 50V
C371	1-162-922-11	s	CERAMIC, CHIP 39PF 5% 50V
C372	1-162-922-11	s	CERAMIC, CHIP 39PF 5% 50V
C373	1-162-922-11	s	CERAMIC, CHIP 39PF 5% 50V
C374	1-162-922-11	s	CERAMIC, CHIP 39PF 5% 50V
C375	1-162-922-11	s	CERAMIC, CHIP 39PF 5% 50V
C376	1-107-826-91	s	CERAMIC 0.1uF 10% 16V
C377	1-162-970-11	s	CERAMIC, CHIP 0.01uF 10% 25V
C378	1-107-826-91	s	CERAMIC 0.1uF 10% 16V
C379	1-162-970-11	s	CERAMIC, CHIP 0.01uF 10% 25V
C380	1-162-970-11	s	CERAMIC, CHIP 0.01uF 10% 25V
C381	1-162-970-11	s	CERAMIC, CHIP 0.01uF 10% 25V
C382	1-164-315-11	s	CERAMIC, CHIP 470PF 5% 50V
C383	1-164-315-11	s	CERAMIC, CHIP 470PF 5% 50V
C384	1-164-227-11	s	CERAMIC, CHIP 0.022uF 10% 25V
C385	1-107-826-91	s	CERAMIC 0.1uF 10% 16V
C386	1-107-826-91	s	CERAMIC 0.1uF 10% 16V
C387	1-107-826-91	s	CERAMIC 0.1uF 10% 16V
C388	1-107-826-91	s	CERAMIC 0.1uF 10% 16V
C389	1-107-826-91	s	CERAMIC 0.1uF 10% 16V
C390	1-162-970-11	s	CERAMIC, CHIP 0.01uF 10% 25V
C391	1-162-970-11	s	CERAMIC, CHIP 0.01uF 10% 25V

(DVP-17 BOARD)

Ref. No. or Q'ty	Part No.	SP	Description
C392	1-162-970-11	s	CERAMIC, CHIP 0.01uF 10% 25V
C393	1-162-970-11	s	CERAMIC, CHIP 0.01uF 10% 25V
C394	1-107-826-91	s	CERAMIC 0.1uF 10% 16V
C395	1-107-826-91	s	CERAMIC 0.1uF 10% 16V
C396	1-107-826-91	s	CERAMIC 0.1uF 10% 16V
C397	1-107-826-91	s	CERAMIC 0.1uF 10% 16V
C398	1-107-826-91	s	CERAMIC 0.1uF 10% 16V
C399	1-107-826-91	s	CERAMIC 0.1uF 10% 16V
C400	1-162-927-11	s	CERAMIC, CHIP 100PF 5% 50V
C401	1-162-927-11	s	CERAMIC, CHIP 100PF 5% 50V
C402	1-107-826-91	s	CERAMIC 0.1uF 10% 16V
C403	1-164-315-11	s	CERAMIC, CHIP 470PF 5% 50V
C404	1-107-826-91	s	CERAMIC 0.1uF 10% 16V
C405	1-164-227-11	s	CERAMIC, CHIP 0.022uF 10% 25V
C406	1-164-227-11	s	CERAMIC, CHIP 0.022uF 10% 25V
C407	1-164-227-11	s	CERAMIC, CHIP 0.022uF 10% 25V
C408	1-162-908-11	s	CERAMIC, CHIP 3PF 50V
C409	1-164-156-11	s	CERAMIC, CHIP 0.1uF 25V
C411	1-164-156-11	s	CERAMIC, CHIP 0.1uF 25V
C412	1-164-156-11	s	CERAMIC, CHIP 0.1uF 25V
C413	1-164-217-11	s	CERAMIC, CHIP 150PF 5% 50V
C414	1-164-230-11	s	CERAMIC 220PF 5% 50V
C415	1-164-230-11	s	CERAMIC 220PF 5% 50V
C416	1-162-964-11	s	CERAMIC, CHIP 0.001uF 10% 50V
C417	1-162-964-11	s	CERAMIC, CHIP 0.001uF 10% 50V
C418	1-107-826-91	s	CERAMIC 0.1uF 10% 16V
C419	1-107-826-91	s	CERAMIC 0.1uF 10% 16V
C420	1-162-970-11	s	CERAMIC, CHIP 0.01uF 10% 25V
C421	1-164-156-11	s	CERAMIC, CHIP 0.1uF 25V
C422	1-164-156-11	s	CERAMIC, CHIP 0.1uF 25V
C423	1-162-967-11	s	CERAMIC, CHIP 0.0033uF 10% 50V
C424	1-162-967-11	s	CERAMIC, CHIP 0.0033uF 10% 50V
C425	1-164-156-11	s	CERAMIC, CHIP 0.1uF 25V
C426	1-164-227-11	s	CERAMIC, CHIP 0.022uF 10% 25V
C427	1-107-826-91	s	CERAMIC 0.1uF 10% 16V
C428	1-162-927-11	s	CERAMIC, CHIP 100PF 5% 50V
C429	1-162-927-11	s	CERAMIC, CHIP 100PF 5% 50V
C430	1-162-927-11	s	CERAMIC, CHIP 100PF 5% 50V
C431	1-162-927-11	s	CERAMIC, CHIP 100PF 5% 50V
C433	1-164-156-11	s	CERAMIC, CHIP 0.1uF 25V
C434	1-164-156-11	s	CERAMIC, CHIP 0.1uF 25V
C435	1-164-156-11	s	CERAMIC, CHIP 0.1uF 25V
C436	1-162-927-11	s	CERAMIC, CHIP 100PF 5% 50V
C437	1-162-927-11	s	CERAMIC, CHIP 100PF 5% 50V
C438	1-107-826-91	s	CERAMIC 0.1uF 10% 16V
C439	1-107-826-91	s	CERAMIC 0.1uF 10% 16V
C440	1-107-826-91	s	CERAMIC 0.1uF 10% 16V
C441	1-107-826-91	s	CERAMIC 0.1uF 10% 16V
C442	1-107-826-91	s	CERAMIC 0.1uF 10% 16V
C443	1-107-826-91	s	CERAMIC 0.1uF 10% 16V
C444	1-162-970-11	s	CERAMIC, CHIP 0.01uF 10% 25V
C445	1-162-970-11	s	CERAMIC, CHIP 0.01uF 10% 25V
C446	1-107-826-91	s	CERAMIC 0.1uF 10% 16V
C447	1-164-227-11	s	CERAMIC, CHIP 0.022uF 10% 25V
C448	1-164-227-11	s	CERAMIC, CHIP 0.022uF 10% 25V
C449	1-164-227-11	s	CERAMIC, CHIP 0.022uF 10% 25V
C450	1-162-967-11	s	CERAMIC, CHIP 0.0033uF 10% 50V
C451	1-162-967-11	s	CERAMIC, CHIP 0.0033uF 10% 50V
C455	1-164-315-11	s	CERAMIC, CHIP 470PF 5% 50V

(DVP-17 BOARD)

Ref. No. or Q'ty	Part No.	SP	Description
C456	1-164-217-11	s	CERAMIC, CHIP 150PF 5% 50V
C457	1-107-826-91	s	CERAMIC 0.1uF 10% 16V
C458	1-107-826-91	s	CERAMIC 0.1uF 10% 16V
C459	1-162-970-11	s	CERAMIC, CHIP 0.01uF 10% 25V
C460	1-164-315-11	s	CERAMIC, CHIP 470PF 5% 50V
C461	1-107-826-91	s	CERAMIC 0.1uF 10% 16V
C462	1-107-826-91	s	CERAMIC 0.1uF 10% 16V
C463	1-107-826-91	s	CERAMIC 0.1uF 10% 16V
C464	1-162-970-11	s	CERAMIC, CHIP 0.01uF 10% 25V
C465	1-164-315-11	s	CERAMIC, CHIP 470PF 5% 50V
C466	1-162-970-11	s	CERAMIC, CHIP 0.01uF 10% 25V
C467	1-162-927-11	s	CERAMIC, CHIP 100PF 5% 50V
C468	1-162-927-11	s	CERAMIC, CHIP 100PF 5% 50V
C469	1-162-970-11	s	CERAMIC, CHIP 0.01uF 10% 25V
C470	1-162-970-11	s	CERAMIC, CHIP 0.01uF 10% 25V
C471	1-107-826-91	s	CERAMIC 0.1uF 10% 16V
C472	1-107-826-91	s	CERAMIC 0.1uF 10% 16V
C477	1-164-156-11	s	CERAMIC, CHIP 0.1uF 25V
C478	1-162-908-11	s	CERAMIC, CHIP 3PF 50V
C479	1-164-156-11	s	CERAMIC, CHIP 0.1uF 25V
C500	1-164-227-11	s	CERAMIC, CHIP 0.022uF 10% 25V
C501	1-164-227-11	s	CERAMIC, CHIP 0.022uF 10% 25V
C502	1-164-227-11	s	CERAMIC, CHIP 0.022uF 10% 25V
C503	1-164-227-11	s	CERAMIC, CHIP 0.022uF 10% 25V
C504	1-164-156-11	s	CERAMIC, CHIP 0.1uF 25V
C505	1-164-227-11	s	CERAMIC, CHIP 0.022uF 10% 25V
C506	1-164-227-11	s	CERAMIC, CHIP 0.022uF 10% 25V
C507	1-164-227-11	s	CERAMIC, CHIP 0.022uF 10% 25V
C508	1-164-227-11	s	CERAMIC, CHIP 0.022uF 10% 25V
C509	1-164-227-11	s	CERAMIC, CHIP 0.022uF 10% 25V
C510	1-164-227-11	s	CERAMIC, CHIP 0.022uF 10% 25V
C511	1-164-227-11	s	CERAMIC, CHIP 0.022uF 10% 25V
C512	1-164-227-11	s	CERAMIC, CHIP 0.022uF 10% 25V
C513	1-164-227-11	s	CERAMIC, CHIP 0.022uF 10% 25V
C514	1-104-851-11	s	TANTALUM, CHIP 10uF 20% 10V
C515	1-164-227-11	s	CERAMIC, CHIP 0.022uF 10% 25V
C516	1-164-156-11	s	CERAMIC, CHIP 0.1uF 25V
C517	1-164-227-11	s	CERAMIC, CHIP 0.022uF 10% 25V
C518	1-164-227-11	s	CERAMIC, CHIP 0.022uF 10% 25V
C519	1-104-851-11	s	TANTALUM, CHIP 10uF 20% 10V
C520	1-164-227-11	s	CERAMIC, CHIP 0.022uF 10% 25V
C521	1-164-156-11	s	CERAMIC, CHIP 0.1uF 25V
C522	1-164-227-11	s	CERAMIC, CHIP 0.022uF 10% 25V
C523	1-115-581-11	s	TANTALUM, CHIP 100uF 20% 16
C524	1-164-156-11	s	CERAMIC, CHIP 0.1uF 25V
C525	1-164-156-11	s	CERAMIC, CHIP 0.1uF 25V
C526	1-164-156-11	s	CERAMIC, CHIP 0.1uF 25V
C527	1-164-227-11	s	CERAMIC, CHIP 0.022uF 10% 25V
C528	1-115-581-11	s	TANTALUM, CHIP 100uF 20% 16
C529	1-164-156-11	s	CERAMIC, CHIP 0.1uF 25V
C530	1-164-156-11	s	CERAMIC, CHIP 0.1uF 25V
C531	1-164-156-11	s	CERAMIC, CHIP 0.1uF 25V
C532	1-164-156-11	s	CERAMIC, CHIP 0.1uF 25V
C533	1-164-156-11	s	CERAMIC, CHIP 0.1uF 25V
C534	1-115-581-11	s	TANTALUM, CHIP 100uF 20% 16
C535	1-164-156-11	s	CERAMIC, CHIP 0.1uF 25V
C536	1-164-156-11	s	CERAMIC, CHIP 0.1uF 25V
C538	1-164-156-11	s	CERAMIC, CHIP 0.1uF 25V
C539	1-162-915-11	s	CERAMIC, CHIP 10PF 50V

(DVP-17 BOARD)

Ref. No. or Q'ty	Part No.	SP	Description
C540	1-165-176-11	s	CERAMIC, CHIP 0.047uF 10% 16V
C541	1-165-176-11	s	CERAMIC, CHIP 0.047uF 10% 16V
C542	1-165-176-11	s	CERAMIC, CHIP 0.047uF 10% 16V
C600	1-164-227-11	s	CERAMIC, CHIP 0.022uF 10% 25V
C601	1-164-227-11	s	CERAMIC, CHIP 0.022uF 10% 25V
C602	1-164-227-11	s	CERAMIC, CHIP 0.022uF 10% 25V
C603	1-164-227-11	s	CERAMIC, CHIP 0.022uF 10% 25V
C604	1-164-227-11	s	CERAMIC, CHIP 0.022uF 10% 25V
C605	1-164-227-11	s	CERAMIC, CHIP 0.022uF 10% 25V
C606	1-164-227-11	s	CERAMIC, CHIP 0.022uF 10% 25V
C607	1-164-227-11	s	CERAMIC, CHIP 0.022uF 10% 25V
C608	1-164-227-11	s	CERAMIC, CHIP 0.022uF 10% 25V
C609	1-164-227-11	s	CERAMIC, CHIP 0.022uF 10% 25V
C610	1-164-227-11	s	CERAMIC, CHIP 0.022uF 10% 25V
C611	1-164-227-11	s	CERAMIC, CHIP 0.022uF 10% 25V
C612	1-164-227-11	s	CERAMIC, CHIP 0.022uF 10% 25V
C613	1-164-227-11	s	CERAMIC, CHIP 0.022uF 10% 25V
C614	1-164-227-11	s	CERAMIC, CHIP 0.022uF 10% 25V
C615	1-164-227-11	s	CERAMIC, CHIP 0.022uF 10% 25V
CN2	1-766-382-11	o	PIN, CONNECTOR (1.5MM)(SMD)10P
CN3	1-695-453-11	s	CONNECTOR, BOARD TO BOARD 50P
CN5	1-785-911-21	o	CONNECTOR, BOARD TO BOARD 30P
CN6	1-569-775-21	o	PIN, CONNECTOR (SMD) 5P
CN7	1-785-913-21	o	CONNECTOR, BOARD TO BOARD 30P
CN8	1-785-913-21	o	CONNECTOR, BOARD TO BOARD 30P
CN9	1-764-007-11	o	PIN, CONNECTOR (SMD) 12P
CN10	1-695-320-21	s	PIN, CONNECTOR (1.5MM)(SMD) 2P
CN22	1-766-382-11	o	PIN, CONNECTOR (1.5MM)(SMD)10P
CP500	1-760-847-21	s	OSCILLATOR, CRYSTAL
CP501	1-760-846-11	s	OSCILLATOR, CRYSTAL
D20	8-719-941-86	s	DIODE DAN202U
D21	8-719-938-72	s	DIODE SB01-05CP
D22	8-719-989-22	s	DIODE CL-150R-CD-T
D23	8-719-820-41	s	DIODE 1SS302
D24	8-719-948-48	s	DIODE HSM88AS-TL
D500	8-719-938-72	s	DIODE SB01-05CP
DL200	1-409-580-11	s	DELAY LINE
DL202	1-409-580-11	s	DELAY LINE
DL350	1-409-580-11	s	DELAY LINE
DL352	1-409-580-11	s	DELAY LINE
FL200	1-239-894-11	s	FILTER, LOW PASS SMD
FL201	1-239-894-11	s	FILTER, LOW PASS SMD
FL350	1-239-894-11	s	FILTER, LOW PASS SMD
FL351	1-239-894-11	s	FILTER, LOW PASS SMD
IC1	8-759-271-84	s	IC TC7SH02FU
IC20	8-759-503-60	s	IC S-80740AN-D4-S
IC21	8-759-257-96	s	IC TC7S14FU(TE85R)
IC22	8-759-257-96	s	IC TC7S14FU(TE85R)
IC23	8-759-296-67	s	IC HD6417032F20
IC24	8-759-524-04	s	IC TC74VHC125FT(EL)
IC25	8-759-667-57	o	IC 29F040-DVW709SY25-V1.02
IC26	8-759-524-04	s	IC TC74VHC125FT(EL)
IC27	8-759-524-04	s	IC TC74VHC125FT(EL)
IC28	8-759-667-58	o	IC 29F040-DVW709SY28-V1.02
IC29	8-759-491-47	s	IC TC74VHCT08AFT(EL)
IC30	8-759-523-94	s	IC TC74VHC32FT(EL)
IC31	8-759-196-97	s	IC TC7SH32FU-TE85R

(DVP-17 BOARD)

Ref. No. or Q'ty	Part No.	SP	Description
IC32	8-759-399-51	s	IC 74LVX4245QSCX
IC33	8-759-524-50	s	IC TC74VHC541FT(EL)
IC34	8-752-381-56	s	IC CXD1095AR
IC35	8-759-058-58	s	IC TC7S04FU(TE85R)
IC36	8-759-523-81	s	IC TC74VHC08FT(EL)
IC37	8-759-175-72	s	IC UPD72002GB-11-3B4
IC38	8-759-523-02	s	IC TC74HC4053AFT(EL)
IC39	8-759-058-55	s	IC TC7S02FU-TE85L
IC40	8-759-165-37	s	IC X24164SIC7000
IC41	8-759-523-95	s	IC TC74VHC74FT(EL)
IC42	8-759-271-86	s	IC TC7SH04FU
IC43	8-759-524-17	s	IC TC74VHC161FT(EL)
IC44	8-759-271-86	s	IC TC7SH04FU
IC45	8-759-447-77	s	IC TC7WH74FU(TE12R)
IC46	8-759-257-96	s	IC TC7S14FU(TE85R)
IC47	8-759-485-79	s	IC TC7SET08FU(TE85R)
IC48	8-759-485-79	s	IC TC7SET08FU(TE85R)
IC49	8-759-491-45	s	IC TC74VHCT00AFT(EL)
IC50	8-759-447-77	s	IC TC7WH74FU(TE12R)
IC51	8-759-485-79	s	IC TC7SET08FU(TE85R)
IC52	8-759-485-79	s	IC TC7SET08FU(TE85R)
IC53	8-759-485-79	s	IC TC7SET08FU(TE85R)
IC150	8-759-524-09	s	IC TC74VHC153FT(EL)
IC151	8-759-524-28	s	IC TC74VHC245FT(EL)
IC152	8-752-378-49	s	IC CXD206-123R
IC153	8-759-167-20	s	IC UPD42280GU-30
IC154	8-759-497-44	s	IC TC7WH125FU(TE12R)
IC155	8-759-485-79	s	IC TC7SET08FU(TE85R)
IC200	8-759-523-81	s	IC TC74VHC08FT(EL)
IC201	8-759-271-86	s	IC TC7SH04FU
IC202	8-759-524-27	s	IC TC74VHC244FT(EL)
IC203	8-759-530-05	s	IC TC4053BFT(EL,N)
IC204	8-759-209-54	s	IC TC4S01F
IC205	8-729-045-28	s	TRANSISTOR SI4532DY-T1
IC206	8-729-040-75	s	TRANSISTOR SI4953DY-T1
IC207	8-729-045-28	s	TRANSISTOR SI4532DY-T1
IC208	8-759-359-66	s	IC TL082CPW-E05
IC209	8-752-085-93	s	IC CXA3229R
IC210	8-759-530-28	s	IC TC4066BFT(EL,N)
IC211	8-759-530-05	s	IC TC4053BFT(EL,N)
IC212	8-759-359-66	s	IC TL082CPW-E05
IC213	8-752-085-93	s	IC CXA3229R
IC214	8-752-075-38	s	IC CXA3053R
IC215	8-752-075-40	s	IC CXA3051R
IC216	8-752-075-40	s	IC CXA3051R
IC217	8-759-485-79	s	IC TC7SET08FU(TE85R)
IC219	8-759-173-13	s	IC CXD8815Q
IC220	8-759-524-09	s	IC TC74VHC153FT(EL)
IC221	8-759-392-01	s	IC TC7SH86FU-TE85R
IC222	8-759-524-48	s	IC TC74VHC393FT(EL)
IC223	8-759-271-84	s	IC TC7SH02FU
IC224	8-759-271-84	s	IC TC7SH02FU
IC225	8-759-530-31	s	IC TC74VHC4040FT(EL)
IC226	8-759-196-97	s	IC TC7SH32FU-TE85R
IC227	8-759-271-84	s	IC TC7SH02FU
IC228	8-759-635-27	s	IC M62352GP
IC229	8-759-635-27	s	IC M62352GP
IC230	8-752-075-38	s	IC CXA3053R
IC231	8-759-530-05	s	IC TC4053BFT(EL,N)

(DVP-17 BOARD)

Ref. No. or Q'ty	Part No.	SP	Description
IC358	8-759-359-66	s	IC TL082CPW-E05
IC360	8-759-524-27	s	IC TC74VHC244FT(EL)
IC361	8-759-523-81	s	IC TC74VHC08FT(EL)
IC362	8-759-359-66	s	IC TL082CPW-E05
IC363	8-759-530-05	s	IC TC4053BFT(EL,N)
IC364	8-759-530-05	s	IC TC4053BFT(EL,N)
IC365	8-752-075-38	s	IC CXA3053R
IC366	8-752-075-38	s	IC CXA3053R
IC367	8-752-075-40	s	IC CXA3051R
IC368	8-752-075-40	s	IC CXA3051R
IC369	8-752-085-93	s	IC CXA3229R
IC370	8-752-085-93	s	IC CXA3229R
IC371	8-759-173-13	s	IC CXD8815Q
IC372	8-759-635-27	s	IC M62352GP
IC500	8-759-523-78	s	IC TC74VHC00FT(EL)
IC501	8-759-523-95	s	IC TC74VHC74FT(EL)
IC502	8-759-523-78	s	IC TC74VHC00FT(EL)
IC503	8-759-524-50	s	IC TC74VHC541FT(EL)
IC504	8-759-524-27	s	IC TC74VHC244FT(EL)
IC505	8-759-524-50	s	IC TC74VHC541FT(EL)
IC506	8-759-524-28	s	IC TC74VHC245FT(EL)
IC507	8-752-377-24	s	IC CXD306-138Q
IC508	8-759-524-50	s	IC TC74VHC541FT(EL)
IC509	8-759-523-78	s	IC TC74VHC00FT(EL)
IC510	8-759-524-50	s	IC TC74VHC541FT(EL)
IC511	8-759-523-78	s	IC TC74VHC00FT(EL)
IC512	8-759-196-96	s	IC TC7SH08FU-TE85R
IC513	8-759-523-95	s	IC TC74VHC74FT(EL)
IC514	8-759-491-45	s	IC TC74VHCT00AFT(EL)
IC515	8-729-045-28	s	TRANSISTOR SI4532DY-T1
IC516	8-729-045-28	s	TRANSISTOR SI4532DY-T1
IC517	8-759-196-96	s	IC TC7SH08FU-TE85R
IC518	8-759-082-55	s	IC TC7W00FU
IC519	8-759-447-77	s	IC TC7WH74FU(TE12R)
IC520	8-759-524-25	o	IC TC7WH241FU(TE12R)
IC521	8-759-209-97	s	IC TC4S81F
IC600	8-752-359-55	s	IC CXK48324R
IC601	8-752-359-55	s	IC CXK48324R
IC602	8-752-359-55	s	IC CXK48324R
IC603	8-752-359-55	s	IC CXK48324R
IS25	1-540-151-21	s	SOCKET, IC
IS28	1-540-151-21	s	SOCKET, IC
L1	1-424-673-11	s	INDUCTOR 4.7uH
L2	1-424-673-11	s	INDUCTOR 4.7uH
L3	1-424-673-11	s	INDUCTOR 4.7uH
L4	1-424-673-11	s	INDUCTOR 4.7uH
L20	1-424-673-11	s	INDUCTOR 4.7uH
L21	1-410-737-31	s	INDUCTOR CHIP 0.47uH
L22	1-410-369-11	s	INDUCTOR CHIP 1uH
L23	1-410-737-31	s	INDUCTOR CHIP 0.47uH
L150	1-410-803-31	s	INDUCTOR 47uH
L200	1-410-737-31	s	INDUCTOR CHIP 0.47uH
L201	1-410-737-31	s	INDUCTOR CHIP 0.47uH
L202	1-410-737-31	s	INDUCTOR CHIP 0.47uH
L203	1-410-737-31	s	INDUCTOR CHIP 0.47uH
L204	1-410-737-31	s	INDUCTOR CHIP 0.47uH
L205	1-410-737-31	s	INDUCTOR CHIP 0.47uH
L206	1-410-737-31	s	INDUCTOR CHIP 0.47uH

(DVP-17 BOARD)

Ref. No. or Q'ty	Part No.	SP	Description
L207	1-410-737-31	s	INDUCTOR CHIP 0.47uH
L208	1-410-737-31	s	INDUCTOR CHIP 0.47uH
L209	1-410-737-31	s	INDUCTOR CHIP 0.47uH
L210	1-410-737-31	s	INDUCTOR CHIP 0.47uH
L211	1-410-737-31	s	INDUCTOR CHIP 0.47uH
L212	1-410-737-31	s	INDUCTOR CHIP 0.47uH
L213	1-410-737-31	s	INDUCTOR CHIP 0.47uH
L214	1-410-737-31	s	INDUCTOR CHIP 0.47uH
L360	1-410-737-31	s	INDUCTOR CHIP 0.47uH
L361	1-410-737-31	s	INDUCTOR CHIP 0.47uH
L500	1-410-807-11	s	INDUCTOR CHIP 0.1uH
L501	1-410-807-11	s	INDUCTOR CHIP 0.1uH
L503	1-409-579-11	s	INDUCTOR 8.2uH
L504	1-409-579-11	s	INDUCTOR 8.2uH
Q20	8-729-140-63	s	TRANSISTOR 2SA1611-M5M6
Q200	8-729-029-14	s	TRANSISTOR DTC144EUA-T106
Q201	8-729-029-14	s	TRANSISTOR DTC144EUA-T106
Q202	8-729-143-13	s	TRANSISTOR 2SC4176-B34
Q203	8-729-143-13	s	TRANSISTOR 2SC4176-B34
Q204	8-729-140-63	s	TRANSISTOR 2SA1611-M5M6
Q205	8-729-143-13	s	TRANSISTOR 2SC4176-B34
Q206	8-729-140-63	s	TRANSISTOR 2SA1611-M5M6
Q207	8-729-141-48	s	TRANSISTOR 2SB624-BV345
Q208	8-729-141-75	s	TRANSISTOR 2SD596DV345
Q209	8-729-143-13	s	TRANSISTOR 2SC4176-B34
Q210	8-729-029-14	s	TRANSISTOR DTC144EUA-T106
Q211	8-729-143-13	s	TRANSISTOR 2SC4176-B34
Q215	8-729-143-13	s	TRANSISTOR 2SC4176-B34
Q355	8-729-143-13	s	TRANSISTOR 2SC4176-B34
Q359	8-729-143-13	s	TRANSISTOR 2SC4176-B34
Q360	8-729-143-13	s	TRANSISTOR 2SC4176-B34
Q361	8-729-143-13	s	TRANSISTOR 2SC4176-B34
Q362	8-729-140-63	s	TRANSISTOR 2SA1611-M5M6
Q363	8-729-140-63	s	TRANSISTOR 2SA1611-M5M6
Q364	8-729-143-13	s	TRANSISTOR 2SC4176-B34
Q365	8-729-143-13	s	TRANSISTOR 2SC4176-B34
Q500	8-729-028-91	s	TRANSISTOR DTA144EUA-T106
Q501	8-729-028-91	s	TRANSISTOR DTA144EUA-T106
R1	1-218-644-11	s	METAL, CHIP 10 0.50% 1/16W
R2	1-218-644-11	s	METAL, CHIP 10 0.50% 1/16W
R3	1-218-644-11	s	METAL, CHIP 10 0.50% 1/16W
R4	1-216-864-11	s	METAL, CHIP 47 0.50% 1/16W
R5	1-218-660-91	s	METAL, CHIP 0 5% 1/16W
R20	1-218-692-11	s	METAL, CHIP 1K 0.50% 1/16W
R21	1-218-692-11	s	METAL, CHIP 1K 0.50% 1/16W
R22	1-218-660-91	s	METAL, CHIP 47 0.50% 1/16W
R23	1-218-748-11	s	METAL, CHIP 220K 0.50% 1/16W
R24	1-218-748-11	s	METAL, CHIP 220K 0.50% 1/16W
R25	1-218-732-11	s	METAL, CHIP 47K 0.50% 1/16W
R26	1-218-668-11	s	METAL, CHIP 100 0.50% 1/16W
R28	1-218-668-11	s	METAL, CHIP 100 0.50% 1/16W
R30	1-218-692-11	s	METAL, CHIP 1K 0.50% 1/16W
R31	1-218-692-11	s	METAL, CHIP 1K 0.50% 1/16W
R32	1-216-857-11	s	METAL, CHIP 1M 5% 1/16W
R33	1-218-692-11	s	METAL, CHIP 1K 0.50% 1/16W
R34	1-218-692-11	s	METAL, CHIP 1K 0.50% 1/16W
R35	1-218-676-11	s	METAL, CHIP 220 0.50% 1/16W
R36	1-216-864-11	s	METAL, CHIP 0 5% 1/16W

(DVP-17 BOARD)

Ref. No. or Q'ty	Part No.	SP	Description
R37	1-218-692-11	s	METAL, CHIP 1K 0.50% 1/16W
R38	1-218-716-11	s	METAL, CHIP 10K 0.50% 1/16W
R39	1-218-748-11	s	METAL, CHIP 220K 0.50% 1/16W
R40	1-218-748-11	s	METAL, CHIP 220K 0.50% 1/16W
R41	1-218-748-11	s	METAL, CHIP 220K 0.50% 1/16W
R42	1-218-748-11	s	METAL, CHIP 220K 0.50% 1/16W
R43	1-218-748-11	s	METAL, CHIP 220K 0.50% 1/16W
R44	1-218-748-11	s	METAL, CHIP 220K 0.50% 1/16W
R45	1-218-668-11	s	METAL, CHIP 100 0.50% 1/16W
R46	1-218-668-11	s	METAL, CHIP 100 0.50% 1/16W
R47	1-218-668-11	s	METAL, CHIP 100 0.50% 1/16W
R48	1-218-668-11	s	METAL, CHIP 100 0.50% 1/16W
R49	1-218-668-11	s	METAL, CHIP 100 0.50% 1/16W
R50	1-218-668-11	s	METAL, CHIP 100 0.50% 1/16W
R51	1-218-668-11	s	METAL, CHIP 100 0.50% 1/16W
R52	1-218-668-11	s	METAL, CHIP 100 0.50% 1/16W
R53	1-218-668-11	s	METAL, CHIP 100 0.50% 1/16W
R54	1-218-748-11	s	METAL, CHIP 220K 0.50% 1/16W
R55	1-218-748-11	s	METAL, CHIP 220K 0.50% 1/16W
R56	1-218-748-11	s	METAL, CHIP 220K 0.50% 1/16W
R57	1-218-740-11	s	METAL, CHIP 100K 0.50% 1/16W
R58	1-218-652-11	s	METAL, CHIP 22 0.50% 1/16W
R59	1-218-652-11	s	METAL, CHIP 22 0.50% 1/16W
R60	1-218-692-11	s	METAL, CHIP 1K 0.50% 1/16W
R61	1-218-692-11	s	METAL, CHIP 1K 0.50% 1/16W
R62	1-218-692-11	s	METAL, CHIP 1K 0.50% 1/16W
R63	1-218-740-11	s	METAL, CHIP 100K 0.50% 1/16W
R64	1-216-864-11	s	METAL, CHIP 0 5% 1/16W
R65	1-216-857-11	s	METAL, CHIP 1M 5% 1/16W
R67	1-218-740-11	s	METAL, CHIP 100K 0.50% 1/16W
R68	1-218-748-11	s	METAL, CHIP 220K 0.50% 1/16W
R69	1-216-864-11	s	METAL, CHIP 0 5% 1/16W
R70	1-218-680-11	s	METAL, CHIP 330 0.50% 1/16W
R71	1-218-740-11	s	METAL, CHIP 100K 0.50% 1/16W
R72	1-218-740-11	s	METAL, CHIP 100K 0.50% 1/16W
R74	1-218-692-11	s	METAL, CHIP 1K 0.50% 1/16W
R75	1-218-668-11	s	METAL, CHIP 100 0.50% 1/16W
R76	1-218-692-11	s	METAL, CHIP 1K 0.50% 1/16W
R77	1-218-692-11	s	METAL, CHIP 1K 0.50% 1/16W
R78	1-218-692-11	s	METAL, CHIP 1K 0.50% 1/16W
R79	1-218-692-11	s	METAL, CHIP 1K 0.50% 1/16W
R80	1-218-692-11	s	METAL, CHIP 1K 0.50% 1/16W
R81	1-218-692-11	s	METAL, CHIP 1K 0.50% 1/16W
R82	1-216-864-11	s	METAL, CHIP 0 5% 1/16W
R83	1-218-748-11	s	METAL, CHIP 220K 0.50% 1/16W
R84	1-218-748-11	s	METAL, CHIP 220K 0.50% 1/16W
R85	1-218-748-11	s	METAL, CHIP 220K 0.50% 1/16W
R86	1-218-748-11	s	METAL, CHIP 220K 0.50% 1/16W
R87	1-216-864-11	s	METAL, CHIP 0 5% 1/16W
R88	1-216-864-11	s	METAL, CHIP 0 5% 1/16W
R89	1-218-732-11	s	METAL, CHIP 47K 0.50% 1/16W
R90	1-218-732-11	s	METAL, CHIP 47K 0.50% 1/16W
R91	1-216-864-11	s	METAL, CHIP 0 5% 1/16W
R92	1-218-748-11	s	METAL, CHIP 220K 0.50% 1/16W
R93	1-218-740-11	s	METAL, CHIP 100K 0.50% 1/16W
R94	1-218-740-11	s	METAL, CHIP 100K 0.50% 1/16W
R95	1-218-708-11	s	METAL, CHIP 4.7K 0.50% 1/16W
R96	1-218-692-11	s	METAL, CHIP 1K 0.50% 1/16W
R97	1-218-748-11	s	METAL, CHIP 220K 0.50% 1/16W

(DVP-17 BOARD)

Ref. No. or Q'ty	Part No.	SP	Description
R98	1-218-692-11	s	METAL, CHIP 1K 0.50% 1/16W
R99	1-218-692-11	s	METAL, CHIP 1K 0.50% 1/16W
R100	1-218-728-11	s	METAL, CHIP 33K 0.50% 1/16W
R101	1-218-728-11	s	METAL, CHIP 33K 0.50% 1/16W
R102	1-218-668-11	s	METAL, CHIP 100 0.50% 1/16W
R103	1-218-668-11	s	METAL, CHIP 100 0.50% 1/16W
R150	1-218-660-91	s	METAL, CHIP 47 0.50% 1/16W
R151	1-218-660-91	s	METAL, CHIP 47 0.50% 1/16W
R152	1-218-660-91	s	METAL, CHIP 47 0.50% 1/16W
R153	1-218-660-91	s	METAL, CHIP 47 0.50% 1/16W
R154	1-218-660-91	s	METAL, CHIP 47 0.50% 1/16W
R155	1-218-660-91	s	METAL, CHIP 47 0.50% 1/16W
R156	1-218-660-91	s	METAL, CHIP 47 0.50% 1/16W
R157	1-218-668-11	s	METAL, CHIP 100 0.50% 1/16W
R159	1-218-740-11	s	METAL, CHIP 100K 0.50% 1/16W
R160	1-218-740-11	s	METAL, CHIP 100K 0.50% 1/16W
R163	1-218-740-11	s	METAL, CHIP 100K 0.50% 1/16W
R164	1-218-660-91	s	METAL, CHIP 47 0.50% 1/16W
R165	1-218-740-11	s	METAL, CHIP 100K 0.50% 1/16W
R166	1-218-692-11	s	METAL, CHIP 1K 0.50% 1/16W
R167	1-218-660-91	s	METAL, CHIP 47 0.50% 1/16W
R200	1-218-660-91	s	METAL, CHIP 47 0.50% 1/16W
R201	1-218-660-91	s	METAL, CHIP 47 0.50% 1/16W
R202	1-218-660-91	s	METAL, CHIP 47 0.50% 1/16W
R203	1-218-660-91	s	METAL, CHIP 47 0.50% 1/16W
R205	1-218-728-11	s	METAL, CHIP 33K 0.50% 1/16W
R206	1-218-728-11	s	METAL, CHIP 33K 0.50% 1/16W
R207	1-218-692-11	s	METAL, CHIP 1K 0.50% 1/16W
R208	1-218-692-11	s	METAL, CHIP 1K 0.50% 1/16W
R209	1-218-692-11	s	METAL, CHIP 1K 0.50% 1/16W
R210	1-218-728-11	s	METAL, CHIP 33K 0.50% 1/16W
R211	1-218-728-11	s	METAL, CHIP 33K 0.50% 1/16W
R212	1-218-728-11	s	METAL, CHIP 33K 0.50% 1/16W
R213	1-218-728-11	s	METAL, CHIP 33K 0.50% 1/16W
R214	1-218-728-11	s	METAL, CHIP 33K 0.50% 1/16W
R216	1-218-728-11	s	METAL, CHIP 33K 0.50% 1/16W
R217	1-218-660-91	s	METAL, CHIP 47 0.50% 1/16W
R218	1-218-660-91	s	METAL, CHIP 47 0.50% 1/16W
R219	1-218-660-91	s	METAL, CHIP 47 0.50% 1/16W
R220	1-218-660-91	s	METAL, CHIP 47 0.50% 1/16W
R221	1-216-311-00	s	METAL, CHIP 6.8 5% 1/10W
R222	1-216-311-00	s	METAL, CHIP 6.8 5% 1/10W
R223	1-218-692-11	s	METAL, CHIP 1K 0.50% 1/16W
R224	1-216-311-00	s	METAL, CHIP 6.8 5% 1/10W
R225	1-216-311-00	s	METAL, CHIP 6.8 5% 1/10W
R226	1-218-692-11	s	METAL, CHIP 1K 0.50% 1/16W
R227	1-218-689-11	s	METAL, CHIP 750 0.50% 1/16W
R228	1-218-724-11	s	METAL, CHIP 22K 5% 1/16W
R229	1-218-689-11	s	METAL, CHIP 750 0.50% 1/16W
R230	1-218-724-11	s	METAL, CHIP 22K 5% 1/16W
R231	1-218-644-11	s	METAL, CHIP 10 0.50% 1/16W
R232	1-218-644-11	s	METAL, CHIP 10 0.50% 1/16W
R233	1-218-689-11	s	METAL, CHIP 750 0.50% 1/16W
R234	1-218-689-11	s	METAL, CHIP 750 0.50% 1/16W
R235	1-218-660-91	s	METAL, CHIP 47 0.50% 1/16W
R237	1-218-660-91	s	METAL, CHIP 47 0.50% 1/16W
R238	1-218-708-11	s	METAL, CHIP 4.7K 0.50% 1/16W
R239	1-218-684-11	s	METAL, CHIP 470 0.50% 1/16W
R240	1-218-665-11	s	METAL, CHIP 75 0.50% 1/16W

(DVP-17 BOARD)

Ref. No. or Q'ty	Part No.	SP	Description
R241	1-218-660-91	s	METAL, CHIP 47 0.50% 1/16W
R242	1-218-660-91	s	METAL, CHIP 47 0.50% 1/16W
R243	1-218-704-11	s	METAL, CHIP 3.3K 0.50% 1/16W
R244	1-218-704-11	s	METAL, CHIP 3.3K 0.50% 1/16W
R245	1-218-660-91	s	METAL, CHIP 47 0.50% 1/16W
R246	1-218-660-91	s	METAL, CHIP 47 0.50% 1/16W
R247	1-218-684-11	s	METAL, CHIP 470 0.50% 1/16W
R248	1-218-652-11	s	METAL, CHIP 22 0.50% 1/16W
R249	1-218-676-11	s	METAL, CHIP 220 0.50% 1/16W
R250	1-218-676-11	s	METAL, CHIP 220 0.50% 1/16W
R251	1-218-851-11	s	METAL, CHIP 1.5K 0.50% 1/16W
R252	1-218-851-11	s	METAL, CHIP 1.5K 0.50% 1/16W
R253	1-218-689-11	s	METAL, CHIP 750 0.50% 1/16W
R254	1-218-689-11	s	METAL, CHIP 750 0.50% 1/16W
R255	1-218-698-11	s	METAL, CHIP 1.8K 0.50% 1/16W
R256	1-218-698-11	s	METAL, CHIP 1.8K 0.50% 1/16W
R257	1-218-688-11	s	METAL, CHIP 680 0.50% 1/16W
R258	1-218-688-11	s	METAL, CHIP 680 0.50% 1/16W
R259	1-218-720-11	s	METAL, CHIP 15K 0.50% 1/16W
R260	1-218-720-11	s	METAL, CHIP 15K 0.50% 1/16W
R261	1-218-694-11	s	METAL, CHIP 1.2K 0.50% 1/16W
R262	1-218-694-11	s	METAL, CHIP 1.2K 0.50% 1/16W
R263	1-218-724-11	s	METAL, CHIP 22K 5% 1/16W
R264	1-218-692-11	s	METAL, CHIP 1K 0.50% 1/16W
R265	1-218-708-11	s	METAL, CHIP 4.7K 0.50% 1/16W
R266	1-218-712-11	s	METAL, CHIP 6.8K 0.50% 1/16W
R267	1-218-720-11	s	METAL, CHIP 15K 0.50% 1/16W
R268	1-218-724-11	s	METAL, CHIP 22K 5% 1/16W
R269	1-218-676-11	s	METAL, CHIP 220 0.50% 1/16W
R270	1-218-732-11	s	METAL, CHIP 47K 0.50% 1/16W
R271	1-218-730-11	s	METAL, CHIP 39K 0.50% 1/16W
R272	1-218-716-11	s	METAL, CHIP 10K 0.50% 1/16W
R273	1-218-660-91	s	METAL, CHIP 47 0.50% 1/16W
R274	1-218-700-11	s	METAL, CHIP 2.2K 0.50% 1/16W
R275	1-218-714-11	s	METAL, CHIP 8.2K 0.50% 1/16W
R276	1-218-714-11	s	METAL, CHIP 8.2K 0.50% 1/16W
R277	1-218-660-91	s	METAL, CHIP 47 0.50% 1/16W
R278	1-218-740-11	s	METAL, CHIP 100K 0.50% 1/16W
R279	1-218-732-11	s	METAL, CHIP 47K 0.50% 1/16W
R280	1-218-714-11	s	METAL, CHIP 8.2K 0.50% 1/16W
R281	1-218-738-11	s	METAL, CHIP 82K 0.50% 1/16W
R282	1-218-700-11	s	METAL, CHIP 2.2K 0.50% 1/16W
R283	1-218-692-11	s	METAL, CHIP 1K 0.50% 1/16W
R284	1-218-692-11	s	METAL, CHIP 1K 0.50% 1/16W
R285	1-218-714-11	s	METAL, CHIP 8.2K 0.50% 1/16W
R286	1-218-738-11	s	METAL, CHIP 82K 0.50% 1/16W
R287	1-218-700-11	s	METAL, CHIP 2.2K 0.50% 1/16W
R288	1-218-692-11	s	METAL, CHIP 1K 0.50% 1/16W
R289	1-218-692-11	s	METAL, CHIP 1K 0.50% 1/16W
R290	1-218-644-11	s	METAL, CHIP 10 0.50% 1/16W
R291	1-218-660-91	s	METAL, CHIP 47 0.50% 1/16W
R293	1-218-660-91	s	METAL, CHIP 47 0.50% 1/16W
R294	1-218-708-11	s	METAL, CHIP 4.7K 0.50% 1/16W
R295	1-218-684-11	s	METAL, CHIP 470 0.50% 1/16W
R296	1-218-851-11	s	METAL, CHIP 1.5K 0.50% 1/16W
R297	1-218-668-11	s	METAL, CHIP 100 0.50% 1/16W
R298	1-218-668-11	s	METAL, CHIP 100 0.50% 1/16W
R299	1-218-660-91	s	METAL, CHIP 47 0.50% 1/16W
R300	1-218-660-91	s	METAL, CHIP 47 0.50% 1/16W

(DVP-17 BOARD)

Ref. No. or Q'ty	Part No.	SP	Description
R301	1-218-660-91	s	METAL, CHIP 47 0.50% 1/16W
R302	1-218-684-11	s	METAL, CHIP 470 0.50% 1/16W
R304	1-218-668-11	s	METAL, CHIP 100 0.50% 1/16W
R307	1-218-684-11	s	METAL, CHIP 470 0.50% 1/16W
R310	1-218-668-11	s	METAL, CHIP 100 0.50% 1/16W
R312	1-218-668-11	s	METAL, CHIP 100 0.50% 1/16W
R313	1-218-660-91	s	METAL, CHIP 47 0.50% 1/16W
R314	1-218-700-11	s	METAL, CHIP 2.2K 0.50% 1/16W
R315	1-218-665-11	s	METAL, CHIP 75 0.50% 1/16W
R316	1-218-660-91	s	METAL, CHIP 47 0.50% 1/16W
R317	1-218-700-11	s	METAL, CHIP 2.2K 0.50% 1/16W
R318	1-218-652-11	s	METAL, CHIP 22 0.50% 1/16W
R319	1-218-851-11	s	METAL, CHIP 1.5K 0.50% 1/16W
R320	1-218-692-11	s	METAL, CHIP 1K 0.50% 1/16W
R321	1-218-708-11	s	METAL, CHIP 4.7K 0.50% 1/16W
R322	1-218-712-11	s	METAL, CHIP 6.8K 0.50% 1/16W
R323	1-218-720-11	s	METAL, CHIP 15K 0.50% 1/16W
R324	1-218-851-11	s	METAL, CHIP 1.5K 0.50% 1/16W
R325	1-218-851-11	s	METAL, CHIP 1.5K 0.50% 1/16W
R326	1-218-732-11	s	METAL, CHIP 47K 0.50% 1/16W
R327	1-218-730-11	s	METAL, CHIP 39K 0.50% 1/16W
R328	1-218-716-11	s	METAL, CHIP 10K 0.50% 1/16W
R329	1-218-660-91	s	METAL, CHIP 47 0.50% 1/16W
R330	1-218-700-11	s	METAL, CHIP 2.2K 0.50% 1/16W
R331	1-218-714-11	s	METAL, CHIP 8.2K 0.50% 1/16W
R332	1-218-714-11	s	METAL, CHIP 8.2K 0.50% 1/16W
R333	1-218-660-91	s	METAL, CHIP 47 0.50% 1/16W
R334	1-216-864-11	s	METAL, CHIP 0 5% 1/16W
R335	1-216-864-11	s	METAL, CHIP 0 5% 1/16W
R336	1-218-692-11	s	METAL, CHIP 1K 0.50% 1/16W
R337	1-218-676-11	s	METAL, CHIP 220 0.50% 1/16W
R338	1-216-864-11	s	METAL, CHIP 0 5% 1/16W
R340	1-216-864-11	s	METAL, CHIP 0 5% 1/16W
R341	1-216-864-11	s	METAL, CHIP 0 5% 1/16W
R343	1-218-708-11	s	METAL, CHIP 4.7K 0.50% 1/16W
R344	1-218-714-11	s	METAL, CHIP 8.2K 0.50% 1/16W
R345	1-216-864-11	s	METAL, CHIP 0 5% 1/16W
R346	1-218-700-11	s	METAL, CHIP 2.2K 0.50% 1/16W
R347	1-218-644-11	s	METAL, CHIP 10 0.50% 1/16W
R348	1-218-712-11	s	METAL, CHIP 6.8K 0.50% 1/16W
R349	1-216-864-11	s	METAL, CHIP 0 5% 1/16W
R350	1-216-864-11	s	METAL, CHIP 0 5% 1/16W
R351	1-218-720-11	s	METAL, CHIP 15K 0.50% 1/16W
R352	1-218-660-91	s	METAL, CHIP 47 0.50% 1/16W
R353	1-218-712-11	s	METAL, CHIP 6.8K 0.50% 1/16W
R354	1-218-700-11	s	METAL, CHIP 2.2K 0.50% 1/16W
R355	1-218-732-11	s	METAL, CHIP 47K 0.50% 1/16W
R356	1-218-700-11	s	METAL, CHIP 2.2K 0.50% 1/16W
R357	1-218-732-11	s	METAL, CHIP 47K 0.50% 1/16W
R358	1-218-851-11	s	METAL, CHIP 1.5K 0.50% 1/16W
R359	1-218-851-11	s	METAL, CHIP 1.5K 0.50% 1/16W
R360	1-218-660-91	s	METAL, CHIP 47 0.50% 1/16W
R361	1-218-660-91	s	METAL, CHIP 47 0.50% 1/16W
R362	1-218-660-91	s	METAL, CHIP 47 0.50% 1/16W
R363	1-218-660-91	s	METAL, CHIP 47 0.50% 1/16W
R364	1-218-728-11	s	METAL, CHIP 33K 0.50% 1/16W
R365	1-218-660-91	s	METAL, CHIP 47 0.50% 1/16W
R366	1-218-660-91	s	METAL, CHIP 47 0.50% 1/16W
R367	1-218-660-91	s	METAL, CHIP 47 0.50% 1/16W

(DVP-17 BOARD)

Ref. No. or Q'ty	Part No.	SP	Description
R368	1-218-660-91	s	METAL, CHIP 47 0.50% 1/16W
R369	1-216-311-00	s	METAL, CHIP 6.8 5% 1/10W
R370	1-216-311-00	s	METAL, CHIP 6.8 5% 1/10W
R371	1-218-692-11	s	METAL, CHIP 1K 0.50% 1/16W
R372	1-216-311-00	s	METAL, CHIP 6.8 5% 1/10W
R373	1-216-311-00	s	METAL, CHIP 6.8 5% 1/10W
R374	1-218-692-11	s	METAL, CHIP 1K 0.50% 1/16W
R375	1-218-689-11	s	METAL, CHIP 750 0.50% 1/16W
R376	1-218-724-11	s	METAL, CHIP 22K 5% 1/16W
R377	1-218-689-11	s	METAL, CHIP 750 0.50% 1/16W
R378	1-218-724-11	s	METAL, CHIP 22K 5% 1/16W
R379	1-218-644-11	s	METAL, CHIP 10 0.50% 1/16W
R380	1-218-689-11	s	METAL, CHIP 750 0.50% 1/16W
R381	1-218-689-11	s	METAL, CHIP 750 0.50% 1/16W
R382	1-218-644-11	s	METAL, CHIP 10 0.50% 1/16W
R383	1-218-700-11	s	METAL, CHIP 2.2K 0.50% 1/16W
R384	1-218-660-91	s	METAL, CHIP 47 0.50% 1/16W
R385	1-218-660-91	s	METAL, CHIP 47 0.50% 1/16W
R387	1-218-660-91	s	METAL, CHIP 47 0.50% 1/16W
R388	1-218-708-11	s	METAL, CHIP 4.7K 0.50% 1/16W
R389	1-218-684-11	s	METAL, CHIP 470 0.50% 1/16W
R390	1-218-704-11	s	METAL, CHIP 3.3K 0.50% 1/16W
R391	1-218-704-11	s	METAL, CHIP 3.3K 0.50% 1/16W
R392	1-218-660-91	s	METAL, CHIP 47 0.50% 1/16W
R393	1-218-660-91	s	METAL, CHIP 47 0.50% 1/16W
R394	1-218-652-11	s	METAL, CHIP 22 0.50% 1/16W
R395	1-218-652-11	s	METAL, CHIP 22 0.50% 1/16W
R396	1-218-676-11	s	METAL, CHIP 220 0.50% 1/16W
R397	1-218-684-11	s	METAL, CHIP 470 0.50% 1/16W
R398	1-218-851-11	s	METAL, CHIP 1.5K 0.50% 1/16W
R399	1-218-851-11	s	METAL, CHIP 1.5K 0.50% 1/16W
R400	1-218-689-11	s	METAL, CHIP 750 0.50% 1/16W
R401	1-218-689-11	s	METAL, CHIP 750 0.50% 1/16W
R402	1-218-698-11	s	METAL, CHIP 1.8K 0.50% 1/16W
R403	1-218-698-11	s	METAL, CHIP 1.8K 0.50% 1/16W
R404	1-218-688-11	s	METAL, CHIP 680 0.50% 1/16W
R405	1-218-688-11	s	METAL, CHIP 680 0.50% 1/16W
R406	1-218-720-11	s	METAL, CHIP 15K 0.50% 1/16W
R407	1-218-720-11	s	METAL, CHIP 15K 0.50% 1/16W
R408	1-218-694-11	s	METAL, CHIP 1.2K 0.50% 1/16W
R409	1-218-694-11	s	METAL, CHIP 1.2K 0.50% 1/16W
R410	1-218-692-11	s	METAL, CHIP 1K 0.50% 1/16W
R411	1-218-851-11	s	METAL, CHIP 1.5K 0.50% 1/16W
R412	1-218-692-11	s	METAL, CHIP 1K 0.50% 1/16W
R413	1-218-851-11	s	METAL, CHIP 1.5K 0.50% 1/16W
R414	1-218-692-11	s	METAL, CHIP 1K 0.50% 1/16W
R415	1-218-708-11	s	METAL, CHIP 4.7K 0.50% 1/16W
R416	1-218-712-11	s	METAL, CHIP 6.8K 0.50% 1/16W
R417	1-218-720-11	s	METAL, CHIP 15K 0.50% 1/16W
R418	1-218-714-11	s	METAL, CHIP 8.2K 0.50% 1/16W
R419	1-218-738-11	s	METAL, CHIP 82K 0.50% 1/16W
R420	1-218-732-11	s	METAL, CHIP 47K 0.50% 1/16W
R421	1-218-730-11	s	METAL, CHIP 39K 0.50% 1/16W
R422	1-218-716-11	s	METAL, CHIP 10K 0.50% 1/16W
R423	1-218-660-91	s	METAL, CHIP 47 0.50% 1/16W
R424	1-218-700-11	s	METAL, CHIP 2.2K 0.50% 1/16W
R425	1-218-714-11	s	METAL, CHIP 8.2K 0.50% 1/16W
R426	1-218-714-11	s	METAL, CHIP 8.2K 0.50% 1/16W
R427	1-218-660-91	s	METAL, CHIP 47 0.50% 1/16W

(DVP-17 BOARD)

Ref. No. or Q'ty	Part No.	SP	Description
R428	1-218-700-11	s	METAL, CHIP 2.2K 0.50% 1/16W
R429	1-218-692-11	s	METAL, CHIP 1K 0.50% 1/16W
R430	1-218-692-11	s	METAL, CHIP 1K 0.50% 1/16W
R431	1-218-714-11	s	METAL, CHIP 8.2K 0.50% 1/16W
R432	1-218-738-11	s	METAL, CHIP 82K 0.50% 1/16W
R433	1-218-700-11	s	METAL, CHIP 2.2K 0.50% 1/16W
R434	1-218-851-11	s	METAL, CHIP 1.5K 0.50% 1/16W
R435	1-218-851-11	s	METAL, CHIP 1.5K 0.50% 1/16W
R436	1-216-864-11	s	METAL, CHIP 0 5% 1/16W
R437	1-218-644-11	s	METAL, CHIP 10 0.50% 1/16W
R438	1-218-644-11	s	METAL, CHIP 10 0.50% 1/16W
R440	1-216-864-11	s	METAL, CHIP 0 5% 1/16W
R441	1-218-660-91	s	METAL, CHIP 47 0.50% 1/16W
R443	1-218-660-91	s	METAL, CHIP 47 0.50% 1/16W
R444	1-218-708-11	s	METAL, CHIP 4.7K 0.50% 1/16W
R445	1-218-684-11	s	METAL, CHIP 470 0.50% 1/16W
R446	1-218-660-91	s	METAL, CHIP 47 0.50% 1/16W
R447	1-218-660-91	s	METAL, CHIP 47 0.50% 1/16W
R448	1-218-660-91	s	METAL, CHIP 47 0.50% 1/16W
R449	1-218-660-91	s	METAL, CHIP 47 0.50% 1/16W
R450	1-218-660-91	s	METAL, CHIP 47 0.50% 1/16W
R451	1-218-668-11	s	METAL, CHIP 100 0.50% 1/16W
R452	1-218-684-11	s	METAL, CHIP 470 0.50% 1/16W
R453	1-216-864-11	s	METAL, CHIP 0 5% 1/16W
R454	1-218-665-11	s	METAL, CHIP 75 0.50% 1/16W
R455	1-216-864-11	s	METAL, CHIP 0 5% 1/16W
R456	1-218-660-91	s	METAL, CHIP 47 0.50% 1/16W
R457	1-218-676-11	s	METAL, CHIP 220 0.50% 1/16W
R458	1-218-700-11	s	METAL, CHIP 2.2K 0.50% 1/16W
R459	1-218-665-11	s	METAL, CHIP 75 0.50% 1/16W
R460	1-216-864-11	s	METAL, CHIP 0 5% 1/16W
R461	1-218-660-91	s	METAL, CHIP 47 0.50% 1/16W
R462	1-218-676-11	s	METAL, CHIP 220 0.50% 1/16W
R463	1-216-864-11	s	METAL, CHIP 0 5% 1/16W
R464	1-218-692-11	s	METAL, CHIP 1K 0.50% 1/16W
R465	1-216-864-11	s	METAL, CHIP 0 5% 1/16W
R467	1-218-700-11	s	METAL, CHIP 2.2K 0.50% 1/16W
R468	1-218-712-11	s	METAL, CHIP 6.8K 0.50% 1/16W
R469	1-218-720-11	s	METAL, CHIP 15K 0.50% 1/16W
R470	1-218-692-11	s	METAL, CHIP 1K 0.50% 1/16W
R471	1-218-708-11	s	METAL, CHIP 4.7K 0.50% 1/16W
R472	1-218-712-11	s	METAL, CHIP 6.8K 0.50% 1/16W
R473	1-218-720-11	s	METAL, CHIP 15K 0.50% 1/16W
R474	1-218-712-11	s	METAL, CHIP 6.8K 0.50% 1/16W
R475	1-218-708-11	s	METAL, CHIP 4.7K 0.50% 1/16W
R476	1-218-732-11	s	METAL, CHIP 47K 0.50% 1/16W
R477	1-218-730-11	s	METAL, CHIP 39K 0.50% 1/16W
R478	1-218-716-11	s	METAL, CHIP 10K 0.50% 1/16W
R479	1-218-660-91	s	METAL, CHIP 47 0.50% 1/16W
R480	1-218-700-11	s	METAL, CHIP 2.2K 0.50% 1/16W
R481	1-218-714-11	s	METAL, CHIP 8.2K 0.50% 1/16W
R482	1-218-714-11	s	METAL, CHIP 8.2K 0.50% 1/16W
R483	1-218-660-91	s	METAL, CHIP 47 0.50% 1/16W
R484	1-218-714-11	s	METAL, CHIP 8.2K 0.50% 1/16W
R485	1-218-700-11	s	METAL, CHIP 2.2K 0.50% 1/16W
R486	1-218-732-11	s	METAL, CHIP 47K 0.50% 1/16W
R487	1-218-700-11	s	METAL, CHIP 2.2K 0.50% 1/16W
R488	1-218-732-11	s	METAL, CHIP 47K 0.50% 1/16W
R489	1-218-676-11	s	METAL, CHIP 220 0.50% 1/16W

(DVP-17 BOARD)

Ref. No. or Q'ty	Part No.	SP	Description
R490	1-216-864-11	s	METAL, CHIP 0 5% 1/16W
R491	1-218-668-11	s	METAL, CHIP 100 0.50% 1/16W
R492	1-218-851-11	s	METAL, CHIP 1.5K 0.50% 1/16W
R493	1-218-851-11	s	METAL, CHIP 1.5K 0.50% 1/16W
R494	1-216-864-11	s	METAL, CHIP 0 5% 1/16W
R496	1-216-864-11	s	METAL, CHIP 0 5% 1/16W
R497	1-216-864-11	s	METAL, CHIP 0 5% 1/16W
R498	1-216-864-11	s	METAL, CHIP 0 5% 1/16W
R499	1-216-864-11	s	METAL, CHIP 0 5% 1/16W
R500	1-218-740-11	s	METAL, CHIP 100K 0.50% 1/16W
R501	1-218-740-11	s	METAL, CHIP 100K 0.50% 1/16W
R502	1-218-668-11	s	METAL, CHIP 100 0.50% 1/16W
R503	1-218-668-11	s	METAL, CHIP 100 0.50% 1/16W
R504	1-218-668-11	s	METAL, CHIP 100 0.50% 1/16W
R505	1-216-864-11	s	METAL, CHIP 0 5% 1/16W
R506	1-218-660-91	s	METAL, CHIP 47 0.50% 1/16W
R509	1-218-740-11	s	METAL, CHIP 100K 0.50% 1/16W
R516	1-216-864-11	s	METAL, CHIP 0 5% 1/16W
R517	1-216-864-11	s	METAL, CHIP 0 5% 1/16W
R518	1-218-881-11	s	METAL, CHIP 27K 0.50% 1/16W
R519	1-218-692-11	s	METAL, CHIP 1K 0.50% 1/16W
R520	1-218-672-11	s	METAL, CHIP 150 0.50% 1/16W
R521	1-218-672-11	s	METAL, CHIP 150 0.50% 1/16W
R522	1-218-668-11	s	METAL, CHIP 100 0.50% 1/16W
R523	1-218-668-11	s	METAL, CHIP 100 0.50% 1/16W
R524	1-218-740-11	s	METAL, CHIP 100K 0.50% 1/16W
R525	1-218-740-11	s	METAL, CHIP 100K 0.50% 1/16W
R526	1-218-740-11	s	METAL, CHIP 100K 0.50% 1/16W
R527	1-218-740-11	s	METAL, CHIP 100K 0.50% 1/16W
R528	1-218-740-11	s	METAL, CHIP 100K 0.50% 1/16W
R529	1-218-716-11	s	METAL, CHIP 10K 0.50% 1/16W
R530	1-216-864-11	s	METAL, CHIP 0 5% 1/16W
R531	1-216-864-11	s	METAL, CHIP 0 5% 1/16W
R532	1-218-728-11	s	METAL, CHIP 33K 0.50% 1/16W
R533	1-218-652-11	s	METAL, CHIP 22 0.50% 1/16W
R534	1-218-692-11	s	METAL, CHIP 1K 0.50% 1/16W
R535	1-218-740-11	s	METAL, CHIP 100K 0.50% 1/16W
R536	1-218-660-91	s	METAL, CHIP 47 0.50% 1/16W
R537	1-218-660-91	s	METAL, CHIP 47 0.50% 1/16W
R538	1-216-864-11	s	METAL, CHIP 0 5% 1/16W
R539	1-218-652-11	s	METAL, CHIP 22 0.50% 1/16W
R540	1-218-676-11	s	METAL, CHIP 220 0.50% 1/16W
R541	1-218-692-11	s	METAL, CHIP 1K 0.50% 1/16W
R543	1-218-716-11	s	METAL, CHIP 10K 0.50% 1/16W
R544	1-218-716-11	s	METAL, CHIP 10K 0.50% 1/16W
R545	1-218-716-11	s	METAL, CHIP 10K 0.50% 1/16W
R600	1-218-692-11	s	METAL, CHIP 1K 0.50% 1/16W
R601	1-218-692-11	s	METAL, CHIP 1K 0.50% 1/16W
R602	1-218-692-11	s	METAL, CHIP 1K 0.50% 1/16W
R603	1-218-692-11	s	METAL, CHIP 1K 0.50% 1/16W
R700	1-216-864-11	s	METAL, CHIP 0 5% 1/16W
R701	1-216-864-11	s	METAL, CHIP 0 5% 1/16W
R702	1-216-864-11	s	METAL, CHIP 0 5% 1/16W
R704	1-216-864-11	s	METAL, CHIP 0 5% 1/16W
R705	1-216-864-11	s	METAL, CHIP 0 5% 1/16W
R707	1-218-692-11	s	METAL, CHIP 1K 0.50% 1/16W
R708	1-216-864-11	s	METAL, CHIP 0 5% 1/16W
R709	1-218-700-11	s	METAL, CHIP 2.2K 0.50% 1/16W
R710	1-218-712-11	s	METAL, CHIP 6.8K 0.50% 1/16W

(DVP-17 BOARD)

Ref. No. or Q'ty	Part No.	SP	Description
R711	1-218-720-11	s	METAL, CHIP 15K 0.50% 1/16W
R712	1-218-712-11	s	METAL, CHIP 6.8K 0.50% 1/16W
R713	1-218-708-11	s	METAL, CHIP 4.7K 0.50% 1/16W
R714	1-218-714-11	s	METAL, CHIP 8.2K 0.50% 1/16W
R715	1-218-700-11	s	METAL, CHIP 2.2K 0.50% 1/16W
R716	1-218-732-11	s	METAL, CHIP 47K 0.50% 1/16W
R717	1-218-700-11	s	METAL, CHIP 2.2K 0.50% 1/16W
R718	1-218-732-11	s	METAL, CHIP 47K 0.50% 1/16W
R719	1-218-720-11	s	METAL, CHIP 15K 0.50% 1/16W
R720	1-218-720-11	s	METAL, CHIP 15K 0.50% 1/16W
R721	1-216-864-11	s	METAL, CHIP 0 5% 1/16W
R722	1-216-864-11	s	METAL, CHIP 0 5% 1/16W
R723	1-218-728-11	s	METAL, CHIP 33K 0.50% 1/16W
R724	1-218-692-11	s	METAL, CHIP 1K 0.50% 1/16W
R800	1-218-692-11	s	METAL, CHIP 1K 0.50% 1/16W
R801	1-216-864-11	s	METAL, CHIP 0 5% 1/16W
R803	1-218-700-11	s	METAL, CHIP 2.2K 0.50% 1/16W
R804	1-218-712-11	s	METAL, CHIP 6.8K 0.50% 1/16W
R805	1-218-720-11	s	METAL, CHIP 15K 0.50% 1/16W
R806	1-218-712-11	s	METAL, CHIP 6.8K 0.50% 1/16W
R807	1-218-708-11	s	METAL, CHIP 4.7K 0.50% 1/16W
R808	1-218-714-11	s	METAL, CHIP 8.2K 0.50% 1/16W
R809	1-218-700-11	s	METAL, CHIP 2.2K 0.50% 1/16W
R810	1-218-732-11	s	METAL, CHIP 47K 0.50% 1/16W
R811	1-218-700-11	s	METAL, CHIP 2.2K 0.50% 1/16W
R812	1-218-732-11	s	METAL, CHIP 47K 0.50% 1/16W
R813	1-218-720-11	s	METAL, CHIP 15K 0.50% 1/16W
R814	1-218-720-11	s	METAL, CHIP 15K 0.50% 1/16W
R815	1-216-864-11	s	METAL, CHIP 0 5% 1/16W
R816	1-216-864-11	s	METAL, CHIP 0 5% 1/16W
RB20	1-239-444-11	s	RESUSTIR BLOCK, CHIP 220K
RB21	1-239-308-11	s	RESISTOR BLOCK, CHIP 47KX8
RB22	1-239-310-11	s	RESISTOR ARRAY, CHIP 220K
RB23	1-236-904-11	s	RESISTOR BLOCK, CHIP 1KX4
RB24	1-236-904-11	s	RESISTOR BLOCK, CHIP 1KX4
RB25	1-236-904-11	s	RESISTOR BLOCK, CHIP 1KX4
RB26	1-236-904-11	s	RESISTOR BLOCK, CHIP 1KX4
RB27	1-239-444-11	s	RESUSTIR BLOCK, CHIP 220K
RB28	1-239-310-11	s	RESISTOR ARRAY, CHIP 220K
RB29	1-239-444-11	s	RESUSTIR BLOCK, CHIP 220K
RB30	1-239-444-11	s	RESUSTIR BLOCK, CHIP 220K
RB31	1-239-444-11	s	RESUSTIR BLOCK, CHIP 220K
RB32	1-239-444-11	s	RESUSTIR BLOCK, CHIP 220K
RB33	1-236-904-11	s	RESISTOR BLOCK, CHIP 1KX4
RB34	1-239-444-11	s	RESUSTIR BLOCK, CHIP 220K
RB35	1-239-310-11	s	RESISTOR ARRAY, CHIP 220K
RB36	1-239-621-11	s	RESISTOR BLOCK, CHIP 22
RB37	1-239-621-11	s	RESISTOR BLOCK, CHIP 22
RB38	1-239-621-11	s	RESISTOR BLOCK, CHIP 22
RB39	1-239-310-11	s	RESISTOR ARRAY, CHIP 220K
RB40	1-239-310-11	s	RESISTOR ARRAY, CHIP 220K
RB41	1-239-444-11	s	RESUSTIR BLOCK, CHIP 220K
RB42	1-239-444-11	s	RESUSTIR BLOCK, CHIP 220K
RB43	1-239-444-11	s	RESUSTIR BLOCK, CHIP 220K
RB44	1-236-904-11	s	RESISTOR BLOCK, CHIP 1KX4
RB45	1-236-904-11	s	RESISTOR BLOCK, CHIP 1KX4
RB46	1-239-444-11	s	RESUSTIR BLOCK, CHIP 220K
RB47	1-236-904-11	s	RESISTOR BLOCK, CHIP 1KX4
RB150	1-236-907-11	s	RESISTOR BLOCK, CHIP 100KX4

(DVP-17 BOARD)

Ref. No. or Q'ty	Part No.	SP	Description
RB151	1-236-907-11	s	RESISTOR BLOCK, CHIP 100KX4
RB152	1-239-409-11	s	RESISTOR BLOCK, CHIP 47X4
RB200	1-239-409-11	s	RESISTOR BLOCK, CHIP 47X4
RB300	1-239-409-11	s	RESISTOR BLOCK, CHIP 47X4
RB500	1-239-412-11	s	NETWORK RESISTOR (CHIP) 100
RB501	1-239-412-11	s	NETWORK RESISTOR (CHIP) 100
RB502	1-236-907-11	s	RESISTOR BLOCK, CHIP 100KX4
RB503	1-236-907-11	s	RESISTOR BLOCK, CHIP 100KX4
RB504	1-239-412-11	s	NETWORK RESISTOR (CHIP) 100
RB505	1-239-412-11	s	NETWORK RESISTOR (CHIP) 100
RB506	1-239-409-11	s	RESISTOR BLOCK, CHIP 47X4
RB507	1-239-409-11	s	RESISTOR BLOCK, CHIP 47X4
RB600	1-236-904-11	s	RESISTOR BLOCK, CHIP 1KX4
RB601	1-236-904-11	s	RESISTOR BLOCK, CHIP 1KX4
RB602	1-236-904-11	s	RESISTOR BLOCK, CHIP 1KX4
RB603	1-236-904-11	s	RESISTOR BLOCK, CHIP 1KX4
S20	1-692-271-31	s	SWITCH, SLIDE
X20	1-767-438-11	s	VIBRATOR, CRYSTAL
X21	1-767-208-11	s	VIBRATOR, CRYSTAL

ES-23/23P BOARD

Note
*N: for DVW-790WS/709WS/707
*P: for DVW-790WSP/709WSP/707P

*q: Serial No.10021 and higher (707 SY)
30006 and higher (707 J/709WS J/790WS J)
10036 and higher (709WS SY/790WS SY)
40036 and higher (707P)
40101 and higher (709WSP)
40086 and higher (790WSP)
*r: Serial No.10001 through 10020 (707 SY)
30001 through 30005 (707 J/709WS J/790WS J)
10001 through 10035 (709WS SY/790WS SY)
40001 through 40035 (707P)
40001 through 40100 (709WSP)
40001 through 40085 (790WSP)

Ref. No. or Q'ty	Part No.	SP	Description
1pc	A-8321-482-A	o	MOUTED CIRCUIT BOARD, ES-23 [for *N]
1pc	A-8321-508-A	o	MOUNTED CIRCUIT BOARD, ES-23P [for *P]
C1	1-164-156-11	s	CERAMIC, CHIP 0.1uF 25V
C2	1-164-156-11	s	CERAMIC, CHIP 0.1uF 25V
C3	1-104-851-11	s	TANTALUM, CHIP 10uF 20% 10V
C4	1-162-915-11	s	CERAMIC, CHIP 10PF 50V
C5	1-162-910-11	s	CERAMIC, CHIP 5PF 50V
C6	1-162-915-11	s	CERAMIC, CHIP 10PF 50V
C9	1-162-920-11	s	CERAMIC, CHIP 27PF 5% 50V
C11	1-162-905-11	s	CERAMIC, CHIP 1PF 50V
C12	1-162-908-11	s	CERAMIC, CHIP 3PF 50V
C13	1-164-156-11	s	CERAMIC, CHIP 0.1uF 25V
C14	1-164-156-11	s	CERAMIC, CHIP 0.1uF 25V
C15	1-135-145-11	s	TANTALUM, CHIP 0.47uF 10% 35V
C16	1-135-145-11	s	TANTALUM, CHIP 0.47uF 10% 35V
C17	1-135-145-11	s	TANTALUM, CHIP 0.47uF 10% 35V
C18	1-135-145-11	s	TANTALUM, CHIP 0.47uF 10% 35V
C19	1-164-156-11	s	CERAMIC, CHIP 0.1uF 25V
C20	1-104-913-11	s	TANTALUM, CHIP 10uF 20% 16V
C21	1-104-913-11	s	TANTALUM, CHIP 10uF 20% 16V
C22	1-162-921-11	s	CERAMIC, CHIP 33PF 5% 50V [for *N]
C22	1-162-926-11	s	CERAMIC, CHIP 82PF 5% 50V [for *P]
C23	1-164-156-11	s	CERAMIC, CHIP 0.1uF 25V
C24	1-164-156-11	s	CERAMIC, CHIP 0.1uF 25V
C25	1-104-851-11	s	TANTALUM, CHIP 10uF 20% 10V
C26	1-164-156-11	s	CERAMIC, CHIP 0.1uF 25V
C27	1-164-156-11	s	CERAMIC, CHIP 0.1uF 25V
C28	1-164-156-11	s	CERAMIC, CHIP 0.1uF 25V
C29	1-135-177-21	s	TANTALUM, CHIP 1uF 10% 25V
C30	1-162-915-11	s	CERAMIC, CHIP 10PF 50V [for *N]
C31	1-115-581-11	s	TANTALUM, CHIP 100uF 20% 16
C32	1-115-581-11	s	TANTALUM, CHIP 100uF 20% 16
C33	1-107-686-11	s	TANTALUM, CHIP 4.7uF 20% 16V
C34	1-164-156-11	s	CERAMIC, CHIP 0.1uF 25V
C35	1-164-156-11	s	CERAMIC, CHIP 0.1uF 25V
C36	1-164-156-11	s	CERAMIC, CHIP 0.1uF 25V
C37	1-164-156-11	s	CERAMIC, CHIP 0.1uF 25V
C38	1-162-915-11	s	CERAMIC, CHIP 10PF 50V
C41	1-162-920-11	s	CERAMIC, CHIP 27PF 5% 50V
C42	1-164-156-11	s	CERAMIC, CHIP 0.1uF 25V
C43	1-164-156-11	s	CERAMIC, CHIP 0.1uF 25V
C46	1-162-909-11	s	CERAMIC, CHIP 4PF 0.25PF 50V
C47	1-164-156-11	s	CERAMIC, CHIP 0.1uF 25V

(ES-23/23P BOARD)

Ref. No. or Q'ty	Part No.	SP	Description
C48	1-164-156-11	s	CERAMIC, CHIP 0.1uF 25V
C49	1-135-145-11	s	TANTALUM, CHIP 0.47uF 10% 35V
C50	1-135-145-11	s	TANTALUM, CHIP 0.47uF 10% 35V
C51	1-135-145-11	s	TANTALUM, CHIP 0.47uF 10% 35V
C52	1-135-145-11	s	TANTALUM, CHIP 0.47uF 10% 35V
C53	1-164-156-11	s	CERAMIC, CHIP 0.1uF 25V
C54	1-115-581-11	s	TANTALUM, CHIP 100uF 20% 16
C55	1-164-156-11	s	CERAMIC, CHIP 0.1uF 25V
C56	1-164-156-11	s	CERAMIC, CHIP 0.1uF 25V
C57	1-115-581-11	s	TANTALUM, CHIP 100uF 20% 16
C58	1-162-920-11	s	CERAMIC, CHIP 27PF 5% 50V
C59	1-162-907-11	s	CERAMIC, CHIP 2PF 50V
C61	1-104-851-11	s	TANTALUM, CHIP 10uF 20% 10V
C62	1-164-156-11	s	CERAMIC, CHIP 0.1uF 25V
C64	1-115-581-11	s	TANTALUM, CHIP 100uF 20% 16
C65	1-162-910-11	s	CERAMIC, CHIP 5PF 50V
C66	1-164-156-11	s	CERAMIC, CHIP 0.1uF 25V
C67	1-164-156-11	s	CERAMIC, CHIP 0.1uF 25V
C68	1-164-156-11	s	CERAMIC, CHIP 0.1uF 25V
C69	1-162-915-11	s	CERAMIC, CHIP 10PF 50V [for *N]
C70	1-164-156-11	s	CERAMIC, CHIP 0.1uF 25V
C71	1-107-686-11	s	TANTALUM, CHIP 4.7uF 20% 16V
C72	1-164-156-11	s	CERAMIC, CHIP 0.1uF 25V
C73	1-162-919-11	s	CERAMIC, CHIP 22PF 5% 50V
C74	1-164-156-11	s	CERAMIC, CHIP 0.1uF 25V
C75	1-162-919-11	s	CERAMIC, CHIP 22PF 5% 50V
C76	1-162-919-11	s	CERAMIC, CHIP 22PF 5% 50V
C78	1-104-913-11	s	TANTALUM, CHIP 10uF 20% 16V
C79	1-104-913-11	s	TANTALUM, CHIP 10uF 20% 16V
C80	1-104-851-11	s	TANTALUM, CHIP 10uF 20% 10V
C81	1-104-851-11	s	TANTALUM, CHIP 10uF 20% 10V
C82	1-162-919-11	s	CERAMIC, CHIP 22PF 5% 50V
C83	1-162-919-11	s	CERAMIC, CHIP 22PF 5% 50V
C84	1-164-156-11	s	CERAMIC, CHIP 0.1uF 25V
C85	1-162-915-11	s	CERAMIC, CHIP 10PF 50V
C88	1-162-920-11	s	CERAMIC, CHIP 27PF 5% 50V
C89	1-164-156-11	s	CERAMIC, CHIP 0.1uF 25V
C90	1-113-994-11	s	TANTALUM, CHIP 6.8uF 20% 16V
C91	1-113-994-11	s	TANTALUM, CHIP 6.8uF 20% 16V
C92	1-164-156-11	s	CERAMIC, CHIP 0.1uF 25V
C93	1-164-156-11	s	CERAMIC, CHIP 0.1uF 25V
C94	1-113-994-11	s	TANTALUM, CHIP 6.8uF 20% 16V
C95	1-107-686-11	s	TANTALUM, CHIP 4.7uF 20% 16V
C96	1-107-686-11	s	TANTALUM, CHIP 4.7uF 20% 16V
C97	1-164-156-11	s	CERAMIC, CHIP 0.1uF 25V
C98	1-113-985-11	s	TANTALUM, CHIP 10uF 20% 20V
C99	1-107-686-11	s	TANTALUM, CHIP 4.7uF 20% 16V
C100	1-107-686-11	s	TANTALUM, CHIP 4.7uF 20% 16V [for *P]
C101	1-162-970-11	s	CERAMIC, CHIP 0.01uF 10% 25V
C102	1-162-970-11	s	CERAMIC, CHIP 0.01uF 10% 25V
C103	1-162-919-11	s	CERAMIC, CHIP 22PF 5% 50V
C104	1-164-156-11	s	CERAMIC, CHIP 0.1uF 25V
C106	1-107-686-11	s	TANTALUM, CHIP 4.7uF 20% 16V
C107	1-164-156-11	s	CERAMIC, CHIP 0.1uF 25V
C108	1-164-156-11	s	CERAMIC, CHIP 0.1uF 25V
C109	1-164-156-11	s	CERAMIC, CHIP 0.1uF 25V
C110	1-164-156-11	s	CERAMIC, CHIP 0.1uF 25V
C111	1-164-156-11	s	CERAMIC, CHIP 0.1uF 25V
C112	1-164-156-11	s	CERAMIC, CHIP 0.1uF 25V
C113	1-104-851-11	s	TANTALUM, CHIP 10uF 20% 10V

(ES-23/23P BOARD)

Ref. No. or Q'ty	Part No.	SP	Description
C114	1-104-851-11	s	TANTALUM, CHIP 10uF 20% 10V
C115	1-164-156-11	s	CERAMIC, CHIP 0.1uF 25V
C116	1-164-156-11	s	CERAMIC, CHIP 0.1uF 25V
C117	1-162-915-11	s	CERAMIC, CHIP 10PF 50V
C120	1-162-920-11	s	CERAMIC, CHIP 27PF 5% 50V
C121	1-113-994-11	s	TANTALUM, CHIP 6.8uF 20% 16V
C122	1-113-994-11	s	TANTALUM, CHIP 6.8uF 20% 16V
C123	1-164-156-11	s	CERAMIC, CHIP 0.1uF 25V
C124	1-164-156-11	s	CERAMIC, CHIP 0.1uF 25V
C125	1-113-994-11	s	TANTALUM, CHIP 6.8uF 20% 16V
C126	1-107-686-11	s	TANTALUM, CHIP 4.7uF 20% 16V
C127	1-107-686-11	s	TANTALUM, CHIP 4.7uF 20% 16V
C129	1-107-686-11	s	TANTALUM, CHIP 4.7uF 20% 16V
C130	1-107-686-11	s	TANTALUM, CHIP 4.7uF 20% 16V
C131	1-164-156-11	s	CERAMIC, CHIP 0.1uF 25V
C132	1-164-156-11	s	CERAMIC, CHIP 0.1uF 25V
C133	1-162-919-11	s	CERAMIC, CHIP 22PF 5% 50V
C134	1-104-851-11	s	TANTALUM, CHIP 10uF 20% 10V
C135	1-162-919-11	s	CERAMIC, CHIP 22PF 5% 50V
C136	1-162-919-11	s	CERAMIC, CHIP 22PF 5% 50V
C137	1-162-923-11	s	CERAMIC, CHIP 47PF 5% 50V
C138	1-164-156-11	s	CERAMIC, CHIP 0.1uF 25V
C139	1-107-686-11	s	TANTALUM, CHIP 4.7uF 20% 16V
C140	1-164-156-11	s	CERAMIC, CHIP 0.1uF 25V
C141	1-162-915-11	s	CERAMIC, CHIP 10PF 50V
C143	1-164-156-11	s	CERAMIC, CHIP 0.1uF 25V
C144	1-164-156-11	s	CERAMIC, CHIP 0.1uF 25V
C145	1-164-156-11	s	CERAMIC, CHIP 0.1uF 25V
C146	1-162-927-11	s	CERAMIC, CHIP 100PF 5% 50V [for *N]
C146	1-162-924-11	s	CERAMIC 56PF 5% 50V [for *P]
C147	1-164-156-11	s	CERAMIC, CHIP 0.1uF 25V
C148	1-164-156-11	s	CERAMIC, CHIP 0.1uF 25V
C150	1-162-919-11	s	CERAMIC, CHIP 22PF 5% 50V
C151	1-162-918-11	s	CERAMIC, CHIP 18PF 5% 50V [for *P]
C152	1-162-921-11	s	CERAMIC, CHIP 33PF 5% 50V
C153	1-162-923-11	s	CERAMIC, CHIP 47PF 5% 50V
C154	1-164-156-11	s	CERAMIC, CHIP 0.1uF 25V
C155	1-115-581-11	s	TANTALUM, CHIP 100uF 20% 16
C156	1-164-156-11	s	CERAMIC, CHIP 0.1uF 25V
C157	1-135-177-21	s	TANTALUM, CHIP 1uF 10% 25V
C158	1-164-156-11	s	CERAMIC, CHIP 0.1uF 25V
C159	1-107-686-11	s	TANTALUM, CHIP 4.7uF 20% 16V
C160	1-164-156-11	s	CERAMIC, CHIP 0.1uF 25V
C161	1-164-156-11	s	CERAMIC, CHIP 0.1uF 25V
C162	1-104-913-11	s	TANTALUM, CHIP 10uF 20% 16V
C163	1-113-987-11	s	TANTALUM, CHIP 4.7uF 20% 25V
C164	1-164-156-11	s	CERAMIC, CHIP 0.1uF 25V
C165	1-135-177-21	s	TANTALUM, CHIP 1uF 10% 25V
C166	1-113-985-11	s	TANTALUM, CHIP 10uF 20% 20V
C167	1-162-918-11	s	CERAMIC, CHIP 18PF 5% 50V
C168	1-164-156-11	s	CERAMIC, CHIP 0.1uF 25V
C169	1-164-156-11	s	CERAMIC, CHIP 0.1uF 25V
C170	1-164-156-11	s	CERAMIC, CHIP 0.1uF 25V
C171	1-107-686-11	s	TANTALUM, CHIP 4.7uF 20% 16V
C172	1-162-918-11	s	CERAMIC, CHIP 18PF 5% 50V
C173	1-162-970-11	s	CERAMIC, CHIP 0.01uF 10% 25V
C174	1-164-156-11	s	CERAMIC, CHIP 0.1uF 25V
C175	1-107-686-11	s	TANTALUM, CHIP 4.7uF 20% 16V
C176	1-162-919-11	s	CERAMIC, CHIP 22PF 5% 50V [for *N]
C176	1-162-918-11	s	CERAMIC, CHIP 18PF 5% 50V [for *P]
C177	1-162-927-11	s	CERAMIC, CHIP 100PF 5% 50V

(ES-23/23P BOARD)

Ref. No. or Q'ty	Part No.	SP	Description
C178	1-164-156-11	s	CERAMIC, CHIP 0.1uF 25V
C179	1-104-851-11	s	TANTALUM, CHIP 10uF 20% 10V
C180	1-164-156-11	s	CERAMIC, CHIP 0.1uF 25V
C181	1-164-156-11	s	CERAMIC, CHIP 0.1uF 25V
C182	1-107-686-11	s	TANTALUM, CHIP 4.7uF 20% 16V
C184	1-104-913-11	s	TANTALUM, CHIP 10uF 20% 16V
C185	1-164-156-11	s	CERAMIC, CHIP 0.1uF 25V
C186	1-164-156-11	s	CERAMIC, CHIP 0.1uF 25V
C187	1-135-177-21	s	TANTALUM, CHIP 1uF 10% 25V
C189	1-164-156-11	s	CERAMIC, CHIP 0.1uF 25V
C190	1-164-156-11	s	CERAMIC, CHIP 0.1uF 25V
C191	1-104-913-11	s	TANTALUM, CHIP 10uF 20% 16V
C192	1-164-156-11	s	CERAMIC, CHIP 0.1uF 25V
C193	1-164-156-11	s	CERAMIC, CHIP 0.1uF 25V
C194	1-164-156-11	s	CERAMIC, CHIP 0.1uF 25V
C195	1-164-156-11	s	CERAMIC, CHIP 0.1uF 25V
C196	1-115-581-11	s	TANTALUM, CHIP 100uF 20% 16
C197	1-164-156-11	s	CERAMIC, CHIP 0.1uF 25V
C198	1-164-156-11	s	CERAMIC, CHIP 0.1uF 25V
C199	1-164-156-11	s	CERAMIC, CHIP 0.1uF 25V
C200	1-164-156-11	s	CERAMIC, CHIP 0.1uF 25V
C201	1-135-149-21	s	TANTALUM, CHIP 2.2uF 10% 10V
C202	1-164-346-11	s	CERAMIC 1uF 16V
C203	1-164-346-11	s	CERAMIC 1uF 16V
C204	1-162-908-11	s	CERAMIC, CHIP 3PF 50V [for *P]
CN1	1-774-998-21	o	CONNECTOR, BOARD TO BOARD 20P
CN2	1-770-678-11	o	CONNECTOR, BOARD TO BOARD 50P
CP2	1-579-716-11	s	OSCILLATOR, CRYSTAL [for *N]
CP2	1-579-718-11	s	OSCILLATOR, CRYSTAL 17.734475MHz [for *P]
D1	8-719-948-48	s	DIODE HSM88AS-TL
D2	8-719-948-48	s	DIODE HSM88AS-TL
D3	8-719-948-48	s	DIODE HSM88AS-TL
D4	8-719-948-48	s	DIODE HSM88AS-TL
D5	8-719-820-41	s	DIODE 1SS302
D6	8-719-820-41	s	DIODE 1SS302
D7	8-719-820-41	s	DIODE 1SS302
D8	8-719-820-41	s	DIODE 1SS302
D9	8-719-820-41	s	DIODE 1SS302
DL1	1-411-271-21	s	DELAY LINE
DL2	1-411-272-21	s	DELAY LINE
FL1	1-233-740-11	s	FILTER, LOW PASS
FL2	1-233-742-11	s	FILTER, LOW PASS
FL3	1-239-528-21	s	FILTER, LOWPASS (NTSC BLANKING) [for *N]
FL3	1-239-527-21	s	FILTER, LOWPASS (PAL BLANKING) [for *P]
FL4	1-239-383-12	s	FILTER, LOWPASS (NTSC SYNC) [for *N]
FL4	1-239-381-21	s	FILTER, LOWPASS (PAL SYNC) [for *P]
FL5	1-233-740-11	s	FILTER, LOW PASS
FL6	1-233-742-11	s	FILTER, LOW PASS
FL7	1-234-350-21	s	FILTER, BAND PASS [for *N]
FL7	1-234-351-21	s	FILTER, BAND PASS [for *P]
FL8	1-239-383-12	s	FILTER, LOWPASS (NTSC SYNC) [for *N]
FL8	1-239-381-21	s	FILTER, LOWPASS (PAL SYNC) [for *P]

(ES-23/23P BOARD)

Ref. No. or Q'ty	Part No.	SP	Description
FL9	1-233-740-11	s	FILTER, LOW PASS
FL10	1-233-742-11	s	FILTER, LOW PASS
FL11	1-239-382-22	s	LPF (U/V)
FL12	1-402-647-11	s	DELAY LINE (90-degree) (NTSC) [for *N]
FL12	1-402-646-21	s	DELAY LINE (90-degree) (PAL) [for *P]
FL13	1-239-375-21	s	FILTER, LOWPASS
FL14	1-233-740-11	s	FILTER, LOW PASS
FL15	1-233-742-11	s	FILTER, LOW PASS
FL16	1-239-382-22	s	LPF (U/V)
FL17	1-239-375-21	s	FILTER, LOWPASS
FL18	1-239-371-21	s	BPF [for *N]
FL18	1-239-374-11	s	BPF [for *P]
IC1	8-759-082-61	s	IC TC4W53FU
IC2	8-759-173-16	s	IC TL062CPW
IC3	8-759-271-86	s	IC TC7SH04FU
IC4	8-759-082-61	s	IC TC4W53FU
IC5	8-759-082-60	s	IC TC7S66FU
IC6	8-759-523-02	s	IC TC74HC4053AFT(EL)
IC7	8-759-082-61	s	IC TC4W53FU
IC8	8-759-271-86	s	IC TC7SH04FU
IC9	8-759-530-30	s	IC TC74VHCU04FT(EL)
IC10	8-759-523-01	s	IC TC74HC4052AFT(EL)
IC11	8-759-082-61	s	IC TC4W53FU
IC12	8-759-082-61	s	IC TC4W53FU
IC13	8-759-906-59	s	IC CX22017
IC14	8-759-082-61	s	IC TC4W53FU
IC15	8-759-082-61	s	IC TC4W53FU
IC16	8-759-271-86	s	IC TC7SH04FU
IC17	8-759-254-49	s	IC EL4581CS-TE2
IC18	8-759-678-06	s	IC CAT24WC02JI-TE13
IC19	8-759-635-27	s	IC M62352GP
IC20	8-759-347-09	s	IC NJU7034V-TE2
IC21	8-759-902-88	s	IC SN74LS123NS
IC22	8-759-082-61	s	IC TC4W53FU
IC23	8-759-635-27	s	IC M62352GP
IC24	8-759-635-27	s	IC M62352GP
IC25	8-759-082-57	s	IC TC7W04FU
IC26	8-759-058-64	s	IC TC7S32FU(TE85R)
IC27	8-759-256-90	s	IC NJU7021V-TE2
IC28	8-759-058-58	s	IC TC7S04FU(TE85R)
IC29	8-759-082-60	s	IC TC7S66FU
IC30	8-759-082-60	s	IC TC7S66FU
IC31	8-759-159-52	s	IC NJU7024M
IC32	8-759-523-02	s	IC TC74HC4053AFT(EL)
IC33	8-759-195-81	s	IC TC7S86FU
IC34	8-759-082-60	s	IC TC7S66FU
IC35	8-759-271-86	s	IC TC7SH04FU
IC36	8-759-271-86	s	IC TC7SH04FU
IC37	8-759-523-95	s	IC TC74VHC74FT(EL)
IC38*q	8-759-196-93	s	IC TC7SH00FU-TE85R
IC38*r	8-759-058-54	s	IC TC7S00FU-TE85R
IC39*q	8-759-491-46	s	IC TC74VHCT04AFT(EL)
IC39*r	8-759-050-50	s	IC SN74HCT04APW(E05)
IC40	8-759-271-86	s	IC TC7SH04FU
IC41	8-759-271-86	s	IC TC7SH04FU
IC42	8-759-082-59	s	IC TC7W32FU
IC43	8-759-058-58	s	IC TC7S04FU(TE85R) [for *N]
IC44	8-759-082-61	s	IC TC4W53FU
IC45	8-759-058-64	s	IC TC7S32FU(TE85R)

(ES-23/23P BOARD)

Ref. No. or Q'ty	Part No.	SP	Description
L2	1-412-951-11	s	INDUCTOR 10uH
L3	1-412-951-11	s	INDUCTOR 10uH
L4	1-410-373-31	s	INDUCTOR CHIP 2.2uH
L5	1-410-373-31	s	INDUCTOR CHIP 2.2uH
L6	1-412-951-11	s	INDUCTOR 10uH
L7	1-412-959-11	s	INDUCTOR 47UH
L8	1-410-373-31	s	INDUCTOR CHIP 2.2uH
L9	1-412-955-11	s	INDUCTOR 22uH
Q1	8-729-117-32	s	TRANSISTOR 2SC4177
Q2	8-729-117-32	s	TRANSISTOR 2SC4177
Q3	8-729-117-32	s	TRANSISTOR 2SC4177
Q4	8-729-117-32	s	TRANSISTOR 2SC4177
Q5	8-729-403-32	s	TRANSISTOR XN6534
Q6	8-729-403-32	s	TRANSISTOR XN6534
Q7	8-729-403-29	s	TRANSISTOR XN6435
Q8	8-729-117-32	s	TRANSISTOR 2SC4177
Q9	8-729-403-32	s	TRANSISTOR XN6534
Q10	8-729-403-29	s	TRANSISTOR XN6435
Q11	8-729-109-44	s	TRANSISTOR 2SK94
Q12	8-729-403-32	s	TRANSISTOR XN6534
Q13	8-729-403-29	s	TRANSISTOR XN6435
Q14	8-729-403-32	s	TRANSISTOR XN6534
Q15	8-729-402-19	s	TRANSISTOR XN6501
Q16	8-729-403-32	s	TRANSISTOR XN6534
Q17	8-729-403-32	s	TRANSISTOR XN6534
Q18	8-729-402-19	s	TRANSISTOR XN6501
Q19	8-729-403-29	s	TRANSISTOR XN6435
Q20	8-729-402-19	s	TRANSISTOR XN6501
Q21	8-729-402-19	s	TRANSISTOR XN6501
Q22	8-729-140-63	s	TRANSISTOR 2SA1611-M5M6
Q23	8-729-017-10	s	TRANSISTOR 2SJ244JY
Q24	8-729-022-32	s	TRANSISTOR 2SK1579DY-TL
Q25	8-729-403-32	s	TRANSISTOR XN6534
Q26	8-729-403-29	s	TRANSISTOR XN6435
Q27	8-729-117-32	s	TRANSISTOR 2SC4177
Q28	8-729-403-32	s	TRANSISTOR XN6534
Q29	8-729-403-29	s	TRANSISTOR XN6435
Q30	8-729-109-44	s	TRANSISTOR 2SK94
Q31	8-729-403-32	s	TRANSISTOR XN6534
Q32	8-729-403-29	s	TRANSISTOR XN6435
Q33	8-729-403-32	s	TRANSISTOR XN6534
Q34	8-729-403-29	s	TRANSISTOR XN6435
Q35	8-729-403-32	s	TRANSISTOR XN6534
Q36	8-729-403-32	s	TRANSISTOR XN6534
Q37	8-729-402-19	s	TRANSISTOR XN6501
Q38	8-729-403-29	s	TRANSISTOR XN6435
Q39	8-729-403-32	s	TRANSISTOR XN6534
Q40	8-729-028-91	s	TRANSISTOR DTA144EUA-T106
Q41	8-729-904-54	s	TRANSISTOR DTB143EK
Q42	8-729-904-72	s	TRANSISTOR DTD143EK
Q43	8-729-117-32	s	TRANSISTOR 2SC4177
Q44	8-729-140-63	s	TRANSISTOR 2SA1611-M5M6
Q45	8-729-403-32	s	TRANSISTOR XN6534
Q46	8-729-403-29	s	TRANSISTOR XN6435
Q47	8-729-117-32	s	TRANSISTOR 2SC4177
Q48	8-729-109-44	s	TRANSISTOR 2SK94
Q49	8-729-403-29	s	TRANSISTOR XN6435
Q50	8-729-403-29	s	TRANSISTOR XN6435
Q51	8-729-117-32	s	TRANSISTOR 2SC4177

(ES-23/23P BOARD)

Ref. No. or Q'ty	Part No.	SP	Description
Q52	8-729-403-32	s	TRANSISTOR XN6534
Q53	8-729-402-19	s	TRANSISTOR XN6501
Q54	8-729-122-63	s	TRANSISTOR 2SA1226
Q55	8-729-117-32	s	TRANSISTOR 2SC4177
Q56	8-729-140-63	s	TRANSISTOR 2SA1611-M5M6
Q57	8-729-403-29	s	TRANSISTOR XN6435
Q58	8-729-403-32	s	TRANSISTOR XN6534
Q59	8-729-402-19	s	TRANSISTOR XN6501
Q60	8-729-402-19	s	TRANSISTOR XN6501
Q61	8-729-117-32	s	TRANSISTOR 2SC4177
Q62	8-729-140-63	s	TRANSISTOR 2SA1611-M5M6
Q63	8-729-403-32	s	TRANSISTOR XN6534
Q64	8-729-403-29	s	TRANSISTOR XN6435
Q65	8-729-117-32	s	TRANSISTOR 2SC4177
Q66	8-729-109-44	s	TRANSISTOR 2SK94
Q67	8-729-403-29	s	TRANSISTOR XN6435
Q68	8-729-403-29	s	TRANSISTOR XN6435
Q69	8-729-117-32	s	TRANSISTOR 2SC4177
Q70	8-729-403-32	s	TRANSISTOR XN6534
Q71	8-729-402-19	s	TRANSISTOR XN6501
Q72	8-729-122-63	s	TRANSISTOR 2SA1226
Q73	8-729-402-19	s	TRANSISTOR XN6501
Q74	8-729-403-29	s	TRANSISTOR XN6435
Q75	8-729-403-32	s	TRANSISTOR XN6534
Q76	8-729-117-32	s	TRANSISTOR 2SC4177
Q77	8-729-403-32	s	TRANSISTOR XN6534
Q78	8-729-403-29	s	TRANSISTOR XN6435
Q79	8-729-117-32	s	TRANSISTOR 2SC4177
Q80	8-729-117-32	s	TRANSISTOR 2SC4177
Q81	8-729-017-10	s	TRANSISTOR 2SJ244JY
Q82	8-729-141-48	s	TRANSISTOR 2SB624-BV345
Q83	8-729-402-19	s	TRANSISTOR XN6501
Q84	8-729-122-63	s	TRANSISTOR 2SA1226
Q85	8-729-117-73	s	TRANSISTOR 2SC4178-F14
Q86	8-729-141-48	s	TRANSISTOR 2SB624-BV345
Q87	8-729-029-14	s	TRANSISTOR DTC144EUA-T106
R1	1-218-672-11	s	METAL, CHIP 150 0.50% 1/16W
R2	1-218-676-11	s	METAL, CHIP 220 0.50% 1/16W
R3	1-218-652-11	s	METAL, CHIP 22 0.50% 1/16W
R4	1-218-652-11	s	METAL, CHIP 22 0.50% 1/16W
R5	1-218-706-11	s	METAL, CHIP 3.9K 0.50% 1/16W
R6	1-218-706-11	s	METAL, CHIP 3.9K 0.50% 1/16W
R7	1-218-699-11	s	METAL, CHIP 2K 0.50% 1/16W
R8	1-218-700-11	s	METAL, CHIP 2.2K 0.50% 1/16W
R9	1-218-700-11	s	METAL, CHIP 2.2K 0.50% 1/16W
R10	1-218-700-11	s	METAL, CHIP 2.2K 0.50% 1/16W
R11	1-216-864-11	s	METAL, CHIP 0 5% 1/16W
R12	1-218-708-11	s	METAL, CHIP 4.7K 0.50% 1/16W
R13	1-218-716-11	s	METAL, CHIP 10K 0.50% 1/16W
R14	1-218-652-11	s	METAL, CHIP 22 0.50% 1/16W
R15	1-218-652-11	s	METAL, CHIP 22 0.50% 1/16W
R16	1-218-851-11	s	METAL, CHIP 1.5K 0.50% 1/16W
R17	1-218-851-11	s	METAL, CHIP 1.5K 0.50% 1/16W
R18	1-218-719-11	s	METAL, CHIP 13K 0.50% 1/16W
R19	1-218-692-11	s	METAL, CHIP 1K 0.50% 1/16W
R20	1-218-684-11	s	METAL, CHIP 470 0.50% 1/16W
R23	1-218-708-11	s	METAL, CHIP 4.7K 0.50% 1/16W
R24	1-218-652-11	s	METAL, CHIP 22 0.50% 1/16W
R25	1-218-652-11	s	METAL, CHIP 22 0.50% 1/16W

(ES-23/23P BOARD)

Ref. No. or Q'ty	Part No.	SP	Description
R26	1-218-714-11	s	METAL, CHIP 8.2K 0.50% 1/16W
R27	1-218-714-11	s	METAL, CHIP 8.2K 0.50% 1/16W
R28	1-218-652-11	s	METAL, CHIP 22 0.50% 1/16W
R29	1-218-694-11	s	METAL, CHIP 1.2K 0.50% 1/16W
R30	1-218-708-11	s	METAL, CHIP 4.7K 0.50% 1/16W
R31	1-218-714-11	s	METAL, CHIP 8.2K 0.50% 1/16W
R32	1-218-708-11	s	METAL, CHIP 4.7K 0.50% 1/16W
R33	1-218-706-11	s	METAL, CHIP 3.9K 0.50% 1/16W
R34	1-218-694-11	s	METAL, CHIP 1.2K 0.50% 1/16W
R35	1-218-712-11	s	METAL, CHIP 6.8K 0.50% 1/16W
R36	1-218-706-11	s	METAL, CHIP 3.9K 0.50% 1/16W
R37	1-218-668-11	s	METAL, CHIP 100 0.50% 1/16W
R38	1-216-861-11	s	METAL, CHIP 2.2M 5% 1/16W
R39	1-218-668-11	s	METAL, CHIP 100 0.50% 1/16W
R40	1-218-716-11	s	METAL, CHIP 10K 0.50% 1/16W
R41	1-218-694-11	s	METAL, CHIP 1.2K 0.50% 1/16W
R42	1-218-740-11	s	METAL, CHIP 100K 0.50% 1/16W
R43	1-216-861-11	s	METAL, CHIP 2.2M 5% 1/16W
R44	1-218-723-91	s	METAL, CHIP 20K 0.50% 1/16W
R45	1-218-716-11	s	METAL, CHIP 10K 0.50% 1/16W
R46	1-218-652-11	s	METAL, CHIP 22 0.50% 1/16W
R47	1-218-652-11	s	METAL, CHIP 22 0.50% 1/16W
R48	1-218-704-11	s	METAL, CHIP 3.3K 0.50% 1/16W
R49	1-218-652-11	s	METAL, CHIP 22 0.50% 1/16W
R50	1-218-708-11	s	METAL, CHIP 4.7K 0.50% 1/16W
R51	1-218-652-11	s	METAL, CHIP 22 0.50% 1/16W
R52	1-218-652-11	s	METAL, CHIP 22 0.50% 1/16W
R53	1-218-708-11	s	METAL, CHIP 4.7K 0.50% 1/16W
R54	1-218-652-11	s	METAL, CHIP 22 0.50% 1/16W
R55	1-218-881-11	s	METAL, CHIP 27K 0.50% 1/16W
R56	1-218-734-11	s	METAL, CHIP 56K 5% 1/16W
R57	1-218-724-11	s	METAL, CHIP 22K 5% 1/16W
R58	1-218-730-11	s	METAL, CHIP 39K 0.50% 1/16W
R59	1-218-692-11	s	METAL, CHIP 1K 0.50% 1/16W
R60	1-218-652-11	s	METAL, CHIP 22 0.50% 1/16W
R61	1-218-730-11	s	METAL, CHIP 39K 0.50% 1/16W
R62	1-218-716-11	s	METAL, CHIP 10K 0.50% 1/16W
R63	1-218-708-11	s	METAL, CHIP 4.7K 0.50% 1/16W
R64	1-218-740-11	s	METAL, CHIP 100K 0.50% 1/16W
R65	1-218-712-11	s	METAL, CHIP 6.8K 0.50% 1/16W
R66	1-218-668-11	s	METAL, CHIP 100 0.50% 1/16W
R67	1-218-710-91	s	METAL 5.6K 0.50% 1/16W
R68	1-218-700-11	s	METAL, CHIP 2.2K 0.50% 1/16W
R69	1-218-722-11	s	METAL, CHIP 18K 0.50% 1/16W
R70	1-218-708-11	s	METAL, CHIP 4.7K 0.50% 1/16W
R71	1-218-714-11	s	METAL, CHIP 8.2K 0.50% 1/16W
R72	1-218-668-11	s	METAL, CHIP 100 0.50% 1/16W
R73	1-218-716-11	s	METAL, CHIP 10K 0.50% 1/16W
R74	1-218-716-11	s	METAL, CHIP 10K 0.50% 1/16W
R75	1-218-668-11	s	METAL, CHIP 100 0.50% 1/16W
R76	1-218-716-11	s	METAL, CHIP 10K 0.50% 1/16W
R77	1-218-716-11	s	METAL, CHIP 10K 0.50% 1/16W
R78	1-218-730-11	s	METAL, CHIP 39K 0.50% 1/16W
R79	1-218-700-11	s	METAL, CHIP 2.2K 0.50% 1/16W
R80	1-218-652-11	s	METAL, CHIP 22 0.50% 1/16W
R81	1-218-730-11	s	METAL, CHIP 39K 0.50% 1/16W
R82	1-218-716-11	s	METAL, CHIP 10K 0.50% 1/16W
R83	1-218-722-11	s	METAL, CHIP 18K 0.50% 1/16W
R84	1-218-716-11	s	METAL, CHIP 10K 0.50% 1/16W
R85	1-218-652-11	s	METAL, CHIP 22 0.50% 1/16W

(ES-23/23P BOARD)

Ref. No. or Q'ty	Part No.	SP	Description
R86	1-218-730-11	s	METAL, CHIP 39K 0.50% 1/16W
R87	1-218-708-11	s	METAL, CHIP 4.7K 0.50% 1/16W
R88	1-218-710-91	s	METAL 5.6K 0.50% 1/16W
R89	1-218-702-11	s	METAL, CHIP 2.7K 0.50% 1/16W
R90	1-218-716-11	s	METAL, CHIP 10K 0.50% 1/16W
R91	1-218-668-11	s	METAL, CHIP 100 0.50% 1/16W
R92	1-218-692-11	s	METAL, CHIP 1K 0.50% 1/16W [for *P]
R93	1-218-692-11	s	METAL, CHIP 1K 0.50% 1/16W [for *N]
R94	1-218-668-11	s	METAL, CHIP 100 0.50% 1/16W
R95	1-218-672-11	s	METAL, CHIP 150 0.50% 1/16W
R96	1-218-652-11	s	METAL, CHIP 22 0.50% 1/16W
R97	1-218-652-11	s	METAL, CHIP 22 0.50% 1/16W
R98	1-218-851-11	s	METAL, CHIP 1.5K 0.50% 1/16W
R99	1-218-851-11	s	METAL, CHIP 1.5K 0.50% 1/16W
R100	1-218-719-11	s	METAL, CHIP 13K 0.50% 1/16W
R101	1-218-692-11	s	METAL, CHIP 1K 0.50% 1/16W
R102	1-218-684-11	s	METAL, CHIP 470 0.50% 1/16W
R105	1-218-708-11	s	METAL, CHIP 4.7K 0.50% 1/16W
R106	1-218-692-11	s	METAL, CHIP 1K 0.50% 1/16W
R107	1-218-652-11	s	METAL, CHIP 22 0.50% 1/16W
R108	1-218-684-11	s	METAL, CHIP 470 0.50% 1/16W
R109	1-218-714-11	s	METAL, CHIP 8.2K 0.50% 1/16W
R110	1-218-714-11	s	METAL, CHIP 8.2K 0.50% 1/16W
R111	1-218-652-11	s	METAL, CHIP 22 0.50% 1/16W
R112	1-218-652-11	s	METAL, CHIP 22 0.50% 1/16W
R113	1-216-857-11	s	METAL, CHIP 1M 5% 1/16W
R114	1-218-708-11	s	METAL, CHIP 4.7K 0.50% 1/16W
R115	1-218-694-11	s	METAL, CHIP 1.2K 0.50% 1/16W
R116	1-218-708-11	s	METAL, CHIP 4.7K 0.50% 1/16W
R117	1-218-714-11	s	METAL, CHIP 8.2K 0.50% 1/16W
R118	1-218-706-11	s	METAL, CHIP 3.9K 0.50% 1/16W
R119	1-218-668-11	s	METAL, CHIP 100 0.50% 1/16W
R120	1-218-694-11	s	METAL, CHIP 1.2K 0.50% 1/16W
R121	1-218-712-11	s	METAL, CHIP 6.8K 0.50% 1/16W
R122	1-218-706-11	s	METAL, CHIP 3.9K 0.50% 1/16W
R123	1-216-861-11	s	METAL, CHIP 2.2M 5% 1/16W
R124	1-216-861-11	s	METAL, CHIP 2.2M 5% 1/16W
R125	1-218-668-11	s	METAL, CHIP 100 0.50% 1/16W
R126	1-218-716-11	s	METAL, CHIP 10K 0.50% 1/16W
R127	1-218-694-11	s	METAL, CHIP 1.2K 0.50% 1/16W
R128	1-218-740-11	s	METAL, CHIP 100K 0.50% 1/16W
R129	1-218-723-91	s	METAL, CHIP 20K 0.50% 1/16W
R130	1-218-716-11	s	METAL, CHIP 10K 0.50% 1/16W
R131	1-218-652-11	s	METAL, CHIP 22 0.50% 1/16W
R132	1-218-704-11	s	METAL, CHIP 3.3K 0.50% 1/16W
R133	1-218-652-11	s	METAL, CHIP 22 0.50% 1/16W
R134	1-218-652-11	s	METAL, CHIP 22 0.50% 1/16W
R135	1-218-700-11	s	METAL, CHIP 2.2K 0.50% 1/16W
R136	1-218-652-11	s	METAL, CHIP 22 0.50% 1/16W
R137	1-218-652-11	s	METAL, CHIP 22 0.50% 1/16W
R138	1-218-708-11	s	METAL, CHIP 4.7K 0.50% 1/16W
R139	1-218-652-11	s	METAL, CHIP 22 0.50% 1/16W
R140	1-218-698-11	s	METAL, CHIP 1.8K 0.50% 1/16W
R141	1-218-687-11	s	METAL, CHIP 620 0.50% 1/16W
R142	1-218-685-11	s	METAL, CHIP 510 0.50% 1/16W
R143	1-216-853-11	s	METAL, CHIP 470K 5% 1/16W
R144	1-218-742-11	s	METAL, CHIP 120K 0.50% 1/16W
R145	1-218-708-11	s	METAL, CHIP 4.7K 0.50% 1/16W

(ES-23/23P BOARD)

Ref. No. or Q'ty	Part No.	SP	Description
R146	1-218-722-11	s	METAL, CHIP 18K 0.50% 1/16W [for *P]
R147	1-218-701-11	s	METAL, CHIP 2.4K 0.50% 1/16W
R148	1-218-706-11	s	METAL, CHIP 3.9K 0.50% 1/16W
R149	1-218-708-11	s	METAL, CHIP 4.7K 0.50% 1/16W
R150	1-218-694-11	s	METAL, CHIP 1.2K 0.50% 1/16W
R151	1-218-668-11	s	METAL, CHIP 100 0.50% 1/16W
R152	1-218-740-11	s	METAL, CHIP 100K 0.50% 1/16W
R153	1-218-706-11	s	METAL, CHIP 3.9K 0.50% 1/16W
R154	1-218-708-11	s	METAL, CHIP 4.7K 0.50% 1/16W
R155	1-218-700-11	s	METAL, CHIP 2.2K 0.50% 1/16W
R156	1-218-652-11	s	METAL, CHIP 22 0.50% 1/16W
R157	1-218-692-11	s	METAL, CHIP 1K 0.50% 1/16W
R159	1-218-691-11	s	METAL, CHIP 910 0.50% 1/16W
R160	1-218-730-11	s	METAL, CHIP 39K 0.50% 1/16W
R161	1-218-700-11	s	METAL, CHIP 2.2K 0.50% 1/16W
R162	1-218-652-11	s	METAL, CHIP 22 0.50% 1/16W
R163	1-218-730-11	s	METAL, CHIP 39K 0.50% 1/16W
R164	1-218-722-11	s	METAL, CHIP 18K 0.50% 1/16W
R165	1-218-716-11	s	METAL, CHIP 10K 0.50% 1/16W
R166	1-218-716-11	s	METAL, CHIP 10K 0.50% 1/16W
R167	1-218-732-11	s	METAL, CHIP 47K 0.50% 1/16W
R168	1-218-719-11	s	METAL, CHIP 13K 0.50% 1/16W
R169	1-218-722-11	s	METAL, CHIP 18K 0.50% 1/16W
R170	1-218-740-11	s	METAL, CHIP 100K 0.50% 1/16W
R171	1-218-724-11	s	METAL, CHIP 22K 5% 1/16W
R172	1-218-719-11	s	METAL, CHIP 13K 0.50% 1/16W
R173	1-218-700-11	s	METAL, CHIP 2.2K 0.50% 1/16W
R174	1-218-706-11	s	METAL, CHIP 3.9K 0.50% 1/16W
R175	1-218-707-11	s	METAL, CHIP 4.3K 0.50% 1/16W
R176	1-218-704-11	s	METAL, CHIP 3.3K 0.50% 1/16W
R177	1-218-716-11	s	METAL, CHIP 10K 0.50% 1/16W
R178	1-218-713-11	s	METAL, CHIP 7.5K 0.50% 1/16W
R179	1-218-713-11	s	METAL, CHIP 7.5K 0.50% 1/16W
R180	1-218-716-11	s	METAL, CHIP 10K 0.50% 1/16W
R181	1-218-660-91	s	METAL, CHIP 47 0.50% 1/16W
R182	1-218-668-11	s	METAL, CHIP 100 0.50% 1/16W
R183	1-218-656-11	s	METAL, CHIP 33 0.50% 1/16W
R184	1-218-656-11	s	METAL, CHIP 33 0.50% 1/16W
R185	1-218-656-11	s	METAL, CHIP 33 0.50% 1/16W
R186	1-218-668-11	s	METAL, CHIP 100 0.50% 1/16W
R187	1-218-692-11	s	METAL, CHIP 1K 0.50% 1/16W
R190	1-218-652-11	s	METAL, CHIP 22 0.50% 1/16W
R191	1-218-676-11	s	METAL, CHIP 220 0.50% 1/16W
R192	1-218-652-11	s	METAL, CHIP 22 0.50% 1/16W
R193	1-218-706-11	s	METAL, CHIP 3.9K 0.50% 1/16W
R194	1-218-700-11	s	METAL, CHIP 2.2K 0.50% 1/16W
R195	1-218-720-11	s	METAL, CHIP 15K 0.50% 1/16W
R197	1-218-720-11	s	METAL, CHIP 15K 0.50% 1/16W
R199	1-218-716-11	s	METAL, CHIP 10K 0.50% 1/16W
R200	1-218-716-11	s	METAL, CHIP 10K 0.50% 1/16W
R201	1-218-692-11	s	METAL, CHIP 1K 0.50% 1/16W
R202	1-218-716-11	s	METAL, CHIP 10K 0.50% 1/16W
R203	1-218-716-11	s	METAL, CHIP 10K 0.50% 1/16W
R204	1-218-692-11	s	METAL, CHIP 1K 0.50% 1/16W
R205	1-218-652-11	s	METAL, CHIP 22 0.50% 1/16W
R206	1-218-652-11	s	METAL, CHIP 22 0.50% 1/16W
R207	1-218-851-11	s	METAL, CHIP 1.5K 0.50% 1/16W
R208	1-218-851-11	s	METAL, CHIP 1.5K 0.50% 1/16W
R209	1-218-719-11	s	METAL, CHIP 13K 0.50% 1/16W

(ES-23/23P BOARD)

Ref. No. or Q'ty	Part No.	SP	Description
R210	1-218-692-11	s	METAL, CHIP 1K 0.50% 1/16W
R211	1-218-684-11	s	METAL, CHIP 470 0.50% 1/16W
R214	1-218-708-11	s	METAL, CHIP 4.7K 0.50% 1/16W
R215	1-218-692-11	s	METAL, CHIP 1K 0.50% 1/16W
R216	1-218-652-11	s	METAL, CHIP 22 0.50% 1/16W
R217	1-218-684-11	s	METAL, CHIP 470 0.50% 1/16W
R218	1-218-652-11	s	METAL, CHIP 22 0.50% 1/16W
R219	1-218-714-11	s	METAL, CHIP 8.2K 0.50% 1/16W
R220	1-218-714-11	s	METAL, CHIP 8.2K 0.50% 1/16W
R221	1-218-652-11	s	METAL, CHIP 22 0.50% 1/16W
R222	1-218-740-11	s	METAL, CHIP 100K 0.50% 1/16W
R223	1-218-646-11	s	METAL, CHIP 12 0.50% 1/16W
R224	1-218-644-11	s	METAL, CHIP 10 0.50% 1/16W
R225	1-218-644-11	s	METAL, CHIP 10 0.50% 1/16W
R226	1-218-644-11	s	METAL, CHIP 10 0.50% 1/16W
R227	1-218-716-11	s	METAL, CHIP 10K 0.50% 1/16W
R228	1-218-708-11	s	METAL, CHIP 4.7K 0.50% 1/16W
R229	1-218-684-11	s	METAL, CHIP 470 0.50% 1/16W
R230	1-218-652-11	s	METAL, CHIP 22 0.50% 1/16W
R231	1-218-708-11	s	METAL, CHIP 4.7K 0.50% 1/16W
R232	1-218-708-11	s	METAL, CHIP 4.7K 0.50% 1/16W
R233	1-218-730-11	s	METAL, CHIP 39K 0.50% 1/16W
R234	1-218-716-11	s	METAL, CHIP 10K 0.50% 1/16W
R235	1-218-708-11	s	METAL, CHIP 4.7K 0.50% 1/16W
R236	1-218-692-11	s	METAL, CHIP 1K 0.50% 1/16W
R237	1-216-857-11	s	METAL, CHIP 1M 5% 1/16W
R238	1-218-716-11	s	METAL, CHIP 10K 0.50% 1/16W
R239	1-218-700-11	s	METAL, CHIP 2.2K 0.50% 1/16W
R240	1-218-652-11	s	METAL, CHIP 22 0.50% 1/16W
R241	1-218-881-11	s	METAL, CHIP 27K 0.50% 1/16W [for *P]
R242	1-218-700-11	s	METAL, CHIP 2.2K 0.50% 1/16W
R243	1-218-708-11	s	METAL, CHIP 4.7K 0.50% 1/16W
R244	1-218-700-11	s	METAL, CHIP 2.2K 0.50% 1/16W
R245	1-218-708-11	s	METAL, CHIP 4.7K 0.50% 1/16W
R246	1-218-700-11	s	METAL, CHIP 2.2K 0.50% 1/16W
R247	1-218-708-11	s	METAL, CHIP 4.7K 0.50% 1/16W
R248	1-218-708-11	s	METAL, CHIP 4.7K 0.50% 1/16W
R249	1-216-857-11	s	METAL, CHIP 1M 5% 1/16W
R250	1-218-692-11	s	METAL, CHIP 1K 0.50% 1/16W
R251	1-216-864-11	s	METAL, CHIP 0 5% 1/16W
R253	1-218-744-11	s	METAL, CHIP 150K 0.50% 1/16W
R254	1-218-724-11	s	METAL, CHIP 22K 5% 1/16W
R255	1-218-728-11	s	METAL, CHIP 33K 0.50% 1/16W
R256	1-218-740-11	s	METAL, CHIP 100K 0.50% 1/16W [for *N]
R257	1-218-724-11	s	METAL, CHIP 22K 5% 1/16W [for *P]
R258	1-218-708-11	s	METAL, CHIP 4.7K 0.50% 1/16W
R259	1-218-708-11	s	METAL, CHIP 4.7K 0.50% 1/16W
R260	1-218-692-11	s	METAL, CHIP 1K 0.50% 1/16W
R261	1-218-692-11	s	METAL, CHIP 1K 0.50% 1/16W
R262	1-218-686-11	s	METAL, CHIP 560 0.50% 1/16W
R263	1-218-700-11	s	METAL, CHIP 2.2K 0.50% 1/16W
R264	1-218-652-11	s	METAL, CHIP 22 0.50% 1/16W
R265	1-218-851-11	s	METAL, CHIP 1.5K 0.50% 1/16W
R266	1-218-708-11	s	METAL, CHIP 4.7K 0.50% 1/16W
R267	1-218-692-11	s	METAL, CHIP 1K 0.50% 1/16W
R268	1-218-710-91	s	METAL 5.6K 0.50% 1/16W
R269	1-218-668-11	s	METAL, CHIP 100 0.50% 1/16W

(ES-23/23P BOARD)

Ref. No. or Q'ty	Part No.	SP	Description
R270	1-218-716-11	s	METAL, CHIP 10K 0.50% 1/16W
R271	1-218-716-11	s	METAL, CHIP 10K 0.50% 1/16W
R272	1-218-668-11	s	METAL, CHIP 100 0.50% 1/16W
R273	1-218-692-11	s	METAL, CHIP 1K 0.50% 1/16W
R274	1-218-692-11	s	METAL, CHIP 1K 0.50% 1/16W
R275	1-218-652-11	s	METAL, CHIP 22 0.50% 1/16W
R276	1-218-730-11	s	METAL, CHIP 39K 0.50% 1/16W
R277	1-218-716-11	s	METAL, CHIP 10K 0.50% 1/16W
R278	1-218-722-11	s	METAL, CHIP 18K 0.50% 1/16W
R279	1-218-716-11	s	METAL, CHIP 10K 0.50% 1/16W
R280	1-218-652-11	s	METAL, CHIP 22 0.50% 1/16W
R281	1-218-676-11	s	METAL, CHIP 220 0.50% 1/16W
R282	1-218-652-11	s	METAL, CHIP 22 0.50% 1/16W
R283	1-218-706-11	s	METAL, CHIP 3.9K 0.50% 1/16W
R284	1-218-700-11	s	METAL, CHIP 2.2K 0.50% 1/16W
R285	1-218-720-11	s	METAL, CHIP 15K 0.50% 1/16W
R287	1-218-720-11	s	METAL, CHIP 15K 0.50% 1/16W
R289	1-218-716-11	s	METAL, CHIP 10K 0.50% 1/16W
R290	1-218-716-11	s	METAL, CHIP 10K 0.50% 1/16W
R291	1-218-652-11	s	METAL, CHIP 22 0.50% 1/16W
R292	1-218-652-11	s	METAL, CHIP 22 0.50% 1/16W
R293	1-218-719-11	s	METAL, CHIP 13K 0.50% 1/16W
R294	1-218-692-11	s	METAL, CHIP 1K 0.50% 1/16W
R295	1-218-684-11	s	METAL, CHIP 470 0.50% 1/16W
R297	1-218-851-11	s	METAL, CHIP 1.5K 0.50% 1/16W
R298	1-218-851-11	s	METAL, CHIP 1.5K 0.50% 1/16W
R300	1-218-708-11	s	METAL, CHIP 4.7K 0.50% 1/16W
R301	1-218-692-11	s	METAL, CHIP 1K 0.50% 1/16W
R302	1-218-652-11	s	METAL, CHIP 22 0.50% 1/16W
R303	1-218-684-11	s	METAL, CHIP 470 0.50% 1/16W
R304	1-218-652-11	s	METAL, CHIP 22 0.50% 1/16W
R305	1-218-714-11	s	METAL, CHIP 8.2K 0.50% 1/16W
R306	1-218-714-11	s	METAL, CHIP 8.2K 0.50% 1/16W
R307	1-218-652-11	s	METAL, CHIP 22 0.50% 1/16W
R308	1-218-740-11	s	METAL, CHIP 100K 0.50% 1/16W
R309	1-218-646-11	s	METAL, CHIP 12 0.50% 1/16W
R310	1-218-644-11	s	METAL, CHIP 10 0.50% 1/16W
R311	1-218-644-11	s	METAL, CHIP 10 0.50% 1/16W
R312	1-218-644-11	s	METAL, CHIP 10 0.50% 1/16W
R313	1-218-716-11	s	METAL, CHIP 10K 0.50% 1/16W
R314	1-218-708-11	s	METAL, CHIP 4.7K 0.50% 1/16W
R315	1-218-684-11	s	METAL, CHIP 470 0.50% 1/16W
R316	1-218-652-11	s	METAL, CHIP 22 0.50% 1/16W
R317	1-218-708-11	s	METAL, CHIP 4.7K 0.50% 1/16W
R318	1-218-708-11	s	METAL, CHIP 4.7K 0.50% 1/16W
R319	1-218-730-11	s	METAL, CHIP 39K 0.50% 1/16W
R320	1-218-716-11	s	METAL, CHIP 10K 0.50% 1/16W
R321	1-218-708-11	s	METAL, CHIP 4.7K 0.50% 1/16W
R322	1-216-857-11	s	METAL, CHIP 1M 5% 1/16W
R323	1-218-716-11	s	METAL, CHIP 10K 0.50% 1/16W
R324	1-218-692-11	s	METAL, CHIP 1K 0.50% 1/16W
R325	1-218-700-11	s	METAL, CHIP 2.2K 0.50% 1/16W
R326	1-218-652-11	s	METAL, CHIP 22 0.50% 1/16W
R327	1-218-700-11	s	METAL, CHIP 2.2K 0.50% 1/16W
R328	1-218-708-11	s	METAL, CHIP 4.7K 0.50% 1/16W
R329	1-218-708-11	s	METAL, CHIP 4.7K 0.50% 1/16W
R330	1-218-687-11	s	METAL, CHIP 620 0.50% 1/16W [for *N]
R330	1-218-686-11	s	METAL, CHIP 560 0.50% 1/16W [for *P]

(ES-23/23P BOARD)

Ref. No. or Q'ty	Part No.	SP	Description
R331	1-216-864-11	s	METAL, CHIP 0 5% 1/16W
R332	1-218-700-11	s	METAL, CHIP 2.2K 0.50% 1/16W
R333	1-218-710-91	s	METAL 5.6K 0.50% 1/16W [for *N]
R333	1-218-712-11	s	METAL, CHIP 6.8K 0.50% 1/16W [for *P]
R334	1-218-708-11	s	METAL, CHIP 4.7K 0.50% 1/16W
R335	1-216-857-11	s	METAL, CHIP 1M 5% 1/16W
R336	1-218-708-11	s	METAL, CHIP 4.7K 0.50% 1/16W
R337	1-218-692-11	s	METAL, CHIP 1K 0.50% 1/16W
R339	1-218-744-11	s	METAL, CHIP 150K 0.50% 1/16W
R340	1-218-740-11	s	METAL, CHIP 100K 0.50% 1/16W
R341	1-218-692-11	s	METAL, CHIP 1K 0.50% 1/16W
R342	1-218-692-11	s	METAL, CHIP 1K 0.50% 1/16W
R343	1-218-652-11	s	METAL, CHIP 22 0.50% 1/16W
R344	1-218-730-11	s	METAL, CHIP 39K 0.50% 1/16W
R345	1-218-722-11	s	METAL, CHIP 18K 0.50% 1/16W
R346	1-218-716-11	s	METAL, CHIP 10K 0.50% 1/16W
R347	1-218-716-11	s	METAL, CHIP 10K 0.50% 1/16W
R348	1-218-732-11	s	METAL, CHIP 47K 0.50% 1/16W
R349	1-218-719-11	s	METAL, CHIP 13K 0.50% 1/16W
R350	1-218-722-11	s	METAL, CHIP 18K 0.50% 1/16W
R351	1-218-740-11	s	METAL, CHIP 100K 0.50% 1/16W
R352	1-218-724-11	s	METAL, CHIP 22K 5% 1/16W
R353	1-218-719-11	s	METAL, CHIP 13K 0.50% 1/16W
R354	1-218-704-11	s	METAL, CHIP 3.3K 0.50% 1/16W
R355	1-218-706-11	s	METAL, CHIP 3.9K 0.50% 1/16W
R356	1-218-700-11	s	METAL, CHIP 2.2K 0.50% 1/16W
R357	1-218-706-11	s	METAL, CHIP 3.9K 0.50% 1/16W
R358	1-218-716-11	s	METAL, CHIP 10K 0.50% 1/16W
R359	1-218-713-11	s	METAL, CHIP 7.5K 0.50% 1/16W
R360	1-218-713-11	s	METAL, CHIP 7.5K 0.50% 1/16W
R361	1-218-716-11	s	METAL, CHIP 10K 0.50% 1/16W
R362	1-218-698-11	s	METAL, CHIP 1.8K 0.50% 1/16W
R363	1-218-668-11	s	METAL, CHIP 100 0.50% 1/16W
R364	1-218-668-11	s	METAL, CHIP 100 0.50% 1/16W
R365	1-218-732-11	s	METAL, CHIP 47K 0.50% 1/16W
R366	1-218-740-11	s	METAL, CHIP 100K 0.50% 1/16W
R367	1-218-704-11	s	METAL, CHIP 3.3K 0.50% 1/16W
R368	1-218-716-11	s	METAL, CHIP 10K 0.50% 1/16W
R369	1-218-716-11	s	METAL, CHIP 10K 0.50% 1/16W
R370	1-218-716-11	s	METAL, CHIP 10K 0.50% 1/16W
R371	1-218-736-11	s	METAL, CHIP 68K 0.50% 1/16W
R372	1-218-716-11	s	METAL, CHIP 10K 0.50% 1/16W
R373	1-218-704-11	s	METAL, CHIP 3.3K 0.50% 1/16W
R374	1-218-740-11	s	METAL, CHIP 100K 0.50% 1/16W
R375	1-218-690-11	s	METAL, CHIP 820 0.50% 1/16W
R376	1-218-700-11	s	METAL, CHIP 2.2K 0.50% 1/16W
R377	1-218-699-11	s	METAL, CHIP 2K 0.50% 1/16W
R378	1-218-716-11	s	METAL, CHIP 10K 0.50% 1/16W
R379	1-218-720-11	s	METAL, CHIP 15K 0.50% 1/16W
R380	1-218-668-11	s	METAL, CHIP 100 0.50% 1/16W
R381	1-218-692-11	s	METAL, CHIP 1K 0.50% 1/16W
R382	1-218-684-11	s	METAL, CHIP 470 0.50% 1/16W
R383	1-218-706-11	s	METAL, CHIP 3.9K 0.50% 1/16W
R385	1-216-855-11	s	METAL, CHIP 680K 5% 1/16W
R386	1-218-708-11	s	METAL, CHIP 4.7K 0.50% 1/16W
R387	1-218-700-11	s	METAL, CHIP 2.2K 0.50% 1/16W
R389	1-218-716-11	s	METAL, CHIP 10K 0.50% 1/16W

(ES-23/23P BOARD)

Ref. No. or Q'ty	Part No.	SP	Description
R390	1-218-716-11	s	METAL, CHIP 10K 0.50% 1/16W
R391	1-218-668-11	s	METAL, CHIP 100 0.50% 1/16W
R392	1-218-740-11	s	METAL, CHIP 100K 0.50% 1/16W
R393	1-218-740-11	s	METAL, CHIP 100K 0.50% 1/16W
R394	1-218-668-11	s	METAL, CHIP 100 0.50% 1/16W
R395	1-218-740-11	s	METAL, CHIP 100K 0.50% 1/16W
R396	1-218-724-11	s	METAL, CHIP 22K 5% 1/16W
R397	1-218-724-11	s	METAL, CHIP 22K 5% 1/16W
R398	1-218-740-11	s	METAL, CHIP 100K 0.50% 1/16W
R399	1-218-682-11	s	METAL, CHIP 390 0.50% 1/16W
R400	1-218-724-11	s	METAL, CHIP 22K 5% 1/16W
R401	1-218-723-91	s	METAL, CHIP 20K 0.50% 1/16W
R402	1-218-718-11	s	METAL, CHIP 12K 0.50% 1/16W
R403	1-218-716-11	s	METAL, CHIP 10K 0.50% 1/16W
R404	1-218-704-11	s	METAL, CHIP 3.3K 0.50% 1/16W [for *N]
R404	1-218-705-11	s	METAL, CHIP 3.6K 0.50% 1/16W [for *P]
R405	1-218-716-11	s	METAL, CHIP 10K 0.50% 1/16W [for *N]
R405	1-218-712-11	s	METAL, CHIP 6.8K 0.50% 1/16W [for *P]
R406	1-218-724-11	s	METAL, CHIP 22K 5% 1/16W
R407	1-218-724-11	s	METAL, CHIP 22K 5% 1/16W
R408	1-218-724-11	s	METAL, CHIP 22K 5% 1/16W
R409	1-218-692-11	s	METAL, CHIP 1K 0.50% 1/16W
R410	1-218-716-11	s	METAL, CHIP 10K 0.50% 1/16W
R411	1-218-700-11	s	METAL, CHIP 2.2K 0.50% 1/16W
R412	1-218-700-11	s	METAL, CHIP 2.2K 0.50% 1/16W
R413	1-218-668-11	s	METAL, CHIP 100 0.50% 1/16W
R414	1-218-692-11	s	METAL, CHIP 1K 0.50% 1/16W
R415	1-218-692-11	s	METAL, CHIP 1K 0.50% 1/16W
R416	1-218-881-11	s	METAL, CHIP 27K 0.50% 1/16W
R417	1-218-716-11	s	METAL, CHIP 10K 0.50% 1/16W
R418	1-218-881-11	s	METAL, CHIP 27K 0.50% 1/16W
R419	1-218-700-11	s	METAL, CHIP 2.2K 0.50% 1/16W
R420	1-218-668-11	s	METAL, CHIP 100 0.50% 1/16W
R421	1-218-720-11	s	METAL, CHIP 15K 0.50% 1/16W
R422	1-218-716-11	s	METAL, CHIP 10K 0.50% 1/16W
R423	1-218-716-11	s	METAL, CHIP 10K 0.50% 1/16W
R424	1-218-700-11	s	METAL, CHIP 2.2K 0.50% 1/16W
R425	1-218-692-11	s	METAL, CHIP 1K 0.50% 1/16W
R426	1-218-668-11	s	METAL, CHIP 100 0.50% 1/16W
R427	1-218-700-11	s	METAL, CHIP 2.2K 0.50% 1/16W [for *N]
R427	1-218-710-91	s	METAL 5.6K 0.50% 1/16W [for *P]
R428	1-218-881-11	s	METAL, CHIP 27K 0.50% 1/16W [for *N]
R428	1-218-728-11	s	METAL, CHIP 33K 0.50% 1/16W [for *P]
R429	1-218-706-11	s	METAL, CHIP 3.9K 0.50% 1/16W
R430	1-218-720-11	s	METAL, CHIP 15K 0.50% 1/16W
R432	1-218-668-11	s	METAL, CHIP 100 0.50% 1/16W
R433	1-218-732-11	s	METAL, CHIP 47K 0.50% 1/16W
R434	1-218-668-11	s	METAL, CHIP 100 0.50% 1/16W
R435	1-218-722-11	s	METAL, CHIP 18K 0.50% 1/16W
R436	1-218-692-11	s	METAL, CHIP 1K 0.50% 1/16W
R437	1-218-724-11	s	METAL, CHIP 22K 5% 1/16W
R438	1-218-692-11	s	METAL, CHIP 1K 0.50% 1/16W
R439	1-218-668-11	s	METAL, CHIP 100 0.50% 1/16W

(ES-23/23P BOARD)

Ref. No. or Q'ty	Part No.	SP	Description
R441	1-218-668-11	s	METAL, CHIP 100 0.50% 1/16W
R442	1-218-740-11	s	METAL, CHIP 100K 0.50% 1/16W
R443	1-216-864-11	s	METAL, CHIP 0 5% 1/16W
R446	1-216-864-11	s	METAL, CHIP 0 5% 1/16W
R447	1-218-668-11	s	METAL, CHIP 100 0.50% 1/16W
R448	1-218-724-11	s	METAL, CHIP 22K 5% 1/16W
R449	1-218-724-11	s	METAL, CHIP 22K 5% 1/16W
R450	1-218-724-11	s	METAL, CHIP 22K 5% 1/16W
R451	1-218-692-11	s	METAL, CHIP 1K 0.50% 1/16W
R452	1-218-692-11	s	METAL, CHIP 1K 0.50% 1/16W
R453	1-218-692-11	s	METAL, CHIP 1K 0.50% 1/16W
R454	1-218-740-11	s	METAL, CHIP 100K 0.50% 1/16W
R455	1-218-742-11	s	METAL, CHIP 120K 0.50% 1/16W
R456	1-218-736-11	s	METAL, CHIP 68K 0.50% 1/16W
R457	1-218-742-11	s	METAL, CHIP 120K 0.50% 1/16W
R459	1-218-742-11	s	METAL, CHIP 120K 0.50% 1/16W
R460	1-218-742-11	s	METAL, CHIP 120K 0.50% 1/16W
R461	1-218-692-11	s	METAL, CHIP 1K 0.50% 1/16W
R462	1-218-736-11	s	METAL, CHIP 68K 0.50% 1/16W
R464	1-218-644-11	s	METAL, CHIP 10 0.50% 1/16W
R465	1-218-644-11	s	METAL, CHIP 10 0.50% 1/16W
R466	1-218-668-11	s	METAL, CHIP 100 0.50% 1/16W
R467	1-218-740-11	s	METAL, CHIP 100K 0.50% 1/16W
R468	1-218-716-11	s	METAL, CHIP 10K 0.50% 1/16W [for *N]
R468	1-218-692-11	s	METAL, CHIP 1K 0.50% 1/16W [for *P]
R469	1-218-716-11	s	METAL, CHIP 10K 0.50% 1/16W
R470	1-218-732-11	s	METAL, CHIP 47K 0.50% 1/16W
R471	1-218-724-11	s	METAL, CHIP 22K 5% 1/16W
R472	1-218-732-11	s	METAL, CHIP 47K 0.50% 1/16W
R473	1-218-740-11	s	METAL, CHIP 100K 0.50% 1/16W
R474	1-218-692-11	s	METAL, CHIP 1K 0.50% 1/16W
R475	1-216-864-11	s	METAL, CHIP 0 5% 1/16W
R476	1-216-857-11	s	METAL, CHIP 1M 5% 1/16W
R477	1-216-857-11	s	METAL, CHIP 1M 5% 1/16W
R478	1-218-644-11	s	METAL, CHIP 10 0.50% 1/16W
R479	1-218-644-11	s	METAL, CHIP 10 0.50% 1/16W
R482*q	1-218-644-11	s	METAL, CHIP 10 0.50% 1/16W
R482*r	1-218-692-11	s	RESISTOR, CHIP 1.0K 1/16W (1608)
R484	1-218-668-11	s	METAL, CHIP 100 0.50% 1/16W
R485	1-218-692-11	s	METAL, CHIP 1K 0.50% 1/16W
R486	1-218-684-11	s	METAL, CHIP 470 0.50% 1/16W
R487	1-218-668-11	s	METAL, CHIP 100 0.50% 1/16W
R488	1-218-668-11	s	METAL, CHIP 100 0.50% 1/16W
R489	1-218-668-11	s	METAL, CHIP 100 0.50% 1/16W
R490	1-218-716-11	s	METAL, CHIP 10K 0.50% 1/16W
R491	1-218-716-11	s	METAL, CHIP 10K 0.50% 1/16W
R492	1-218-716-11	s	METAL, CHIP 10K 0.50% 1/16W
R493	1-218-692-11	s	METAL, CHIP 1K 0.50% 1/16W
R494	1-218-684-11	s	METAL, CHIP 470 0.50% 1/16W
R495	1-218-684-11	s	METAL, CHIP 470 0.50% 1/16W
R496	1-218-668-11	s	METAL, CHIP 100 0.50% 1/16W
R497	1-218-692-11	s	METAL, CHIP 1K 0.50% 1/16W
R498	1-216-857-11	s	METAL, CHIP 1M 5% 1/16W
R499	1-216-857-11	s	METAL, CHIP 1M 5% 1/16W

HN-260 BOARD

Note

*s: Serial No.10056 and higher (707 SY)
30011 and higher (707 J)
10121 and higher (709WS SY)
30006 and higher (709WS J/790WS J)
10131 and higher (790WS SY)
40156 and higher (707P)
40226 and higher (709WSP)
40401 and higher (790WSP)

*t: Serial No.10001 through 10055 (707 SY)
30001 through 30010 (707 J)
10001 through 10120 (709WS SY)
30001 through 30005 (709WS J/790WS J)
10001 through 10130 (790WS SY)
40001 through 40155 (707P)
40001 through 40225 (709WSP)
40001 through 40440 (790WSP)

Ref. No. or Q'ty	Part No.	SP	Description
1pc	A-8321-453-A	o	MOUNTED CIRCUIT BOARD, HN-260
1pc	3-680-489-02	o	BRACKET,HN
6pcs	3-729-061-01	s	SCREW (M2X4.5) (TYPE 1)
4pcs*s	4-352-844-01	o	PIN, LEAD, COATING
2pcs	4-352-844-01	o	PIN, LEAD, COATING
1pc	3-680-270-01	o	PLATE(HN-189),ORNAMENTAL
C1	1-164-227-11	s	CERAMIC, CHIP 0.022uF 10% 25V
C2	1-164-227-11	s	CERAMIC, CHIP 0.022uF 10% 25V
C3	1-164-227-11	s	CERAMIC, CHIP 0.022uF 10% 25V
C4	1-126-394-11	s	ELECT, CHIP 10uF 20% 16V
C5	1-126-394-11	s	ELECT, CHIP 10uF 20% 16V
C6	1-104-553-11	s	FILM, CHIP 0.015uF 5% 16V
C7	1-135-201-11	s	TANTALUM, CHIP 10uF 20% 6.3V
C8	1-135-201-11	s	TANTALUM, CHIP 10uF 20% 6.3V
C9	1-164-230-11	s	CERAMIC 220PF 5% 50V
C10	1-162-968-11	s	CERAMIC, CHIP 0.0047uF 10% 50V
C11	1-162-968-11	s	CERAMIC, CHIP 0.0047uF 10% 50V
C12	1-164-004-11	s	CERAMIC, CHIP 0.1uF 10% 25V
C13	1-162-970-11	s	CERAMIC, CHIP 0.01uF 10% 25V
C14	1-126-395-11	s	ELECT 22uF 20% 16V
C15	1-162-968-11	s	CERAMIC, CHIP 0.0047uF 10% 50V
C16	1-164-230-11	s	CERAMIC 220PF 5% 50V
C17	1-164-227-11	s	CERAMIC, CHIP 0.022uF 10% 25V
C18	1-164-227-11	s	CERAMIC, CHIP 0.022uF 10% 25V
C19	1-164-227-11	s	CERAMIC, CHIP 0.022uF 10% 25V
C20	1-164-230-11	s	CERAMIC 220PF 5% 50V
C21	1-164-227-11	s	CERAMIC, CHIP 0.022uF 10% 25V
C22	1-164-227-11	s	CERAMIC, CHIP 0.022uF 10% 25V
C23	1-164-227-11	s	CERAMIC, CHIP 0.022uF 10% 25V
C24	1-104-916-11	s	TANTALUM, CHIP 6.8uF 10% 20V
C25	1-164-227-11	s	CERAMIC, CHIP 0.022uF 10% 25V
C26	1-164-227-11	s	CERAMIC, CHIP 0.022uF 10% 25V
C27	1-164-230-11	s	CERAMIC 220PF 5% 50V
C28	1-164-227-11	s	CERAMIC, CHIP 0.022uF 10% 25V
C29	1-164-227-11	s	CERAMIC, CHIP 0.022uF 10% 25V
C30	1-164-227-11	s	CERAMIC, CHIP 0.022uF 10% 25V
C31	1-164-227-11	s	CERAMIC, CHIP 0.022uF 10% 25V
C32	1-164-227-11	s	CERAMIC, CHIP 0.022uF 10% 25V
C33	1-164-227-11	s	CERAMIC, CHIP 0.022uF 10% 25V
C34	1-135-210-11	s	TANTALUM, CHIP 4.7uF 20% 10V
C35	1-164-227-11	s	CERAMIC, CHIP 0.022uF 10% 25V
C36	1-135-210-11	s	TANTALUM, CHIP 4.7uF 20% 10V
C37	1-164-227-11	s	CERAMIC, CHIP 0.022uF 10% 25V

(HN-260 BOARD)

Ref. No. or Q'ty	Part No.	SP	Description
CN1	1-750-933-21	o	PIN, CONNECTOR 12P
CN2	1-580-538-11	o	CONNECTOR, LY 18P, MALE
CN4	1-691-591-11	o	PIN, CONNECTOR (1.5MM) (SMD)8P
CN5	1-573-806-21	s	PIN, CONNECTOR (1.5MM) (SMD)6P
CN6	1-766-383-11	o	PIN, CONNECTOR (1.5MM)(SMD)12P
CN7	1-691-551-11	o	PIN, CONNECTOR (SMD) 8P
CN8	1-573-290-21	s	PIN, CONNECTOR (1.5MM) (SMD)4P
CN9	1-573-290-21	s	PIN, CONNECTOR (1.5MM) (SMD)4P
CN10	1-691-591-11	o	PIN, CONNECTOR (1.5MM) (SMD)8P
CN11	1-766-376-11	o	PIN, CONNECTOR (1.5MM)(SMD) 9P
CN12	1-691-550-11	s	PIN, CONNECTOR (1.5MM)(SMD) 3P
CN14	1-766-376-11	o	PIN, CONNECTOR (1.5MM)(SMD) 9P
CT1	1-424-511-11	s	TRANSFORMER, FE
D5	8-719-106-88	s	DIODE RD15M-B1
D6	8-719-941-86	s	DIODE DAN202U
D7	8-719-026-39	s	DIODE CL-150UR-CD-T
D8	8-719-026-39	s	DIODE CL-150UR-CD-T
D10	8-719-026-39	s	DIODE CL-150UR-CD-T
D11	8-719-026-39	s	DIODE CL-150UR-CD-T
D12	8-719-026-39	s	DIODE CL-150UR-CD-T
D13	8-719-026-39	s	DIODE CL-150UR-CD-T
IC2	8-759-530-05	s	IC TC4053BFT(EL,N)
IC3	8-759-710-28	s	IC NJM4565M-A
IC4	8-759-260-53	s	IC LM2903PW-E05
IC5	8-759-209-15	s	IC TC4SU69F
IC6	8-759-112-53	s	IC UPC1663G
IC7	8-759-112-53	s	IC UPC1663G
IC8	8-759-101-12	s	IC UPC311G2
IC10	8-759-431-99	s	IC BR9020F-E2
IC11	8-759-196-96	s	IC TC7SH08FU-TE85R
L1	1-424-642-11	s	INDUCTOR 47uH
L2	1-424-642-11	s	INDUCTOR 47uH
L3	1-424-642-11	s	INDUCTOR 47uH
L10	1-410-385-11	s	INDUCTOR, CHIP 22uH
L11	1-410-385-11	s	INDUCTOR, CHIP 22uH
Q1	8-729-118-56	s	TRANSISTOR 2SK852-X2
Q2	8-729-020-93	s	TRANSISTOR 2SC2982C-TE12L
Q3	8-729-117-32	s	TRANSISTOR 2SC4177
Q4	8-729-140-63	s	TRANSISTOR 2SA1611-M5M6
Q5	8-729-029-14	s	TRANSISTOR DTC144EUA-T106
Q6	8-729-824-34	s	TRANSISTOR 2SJ187
Q7	8-729-209-07	s	TRANSISTOR 2SC4213-B
Q8	8-729-209-07	s	TRANSISTOR 2SC4213-B
Q9	8-729-028-91	s	TRANSISTOR DTA144EUA-T106
Q10	8-729-143-14	s	TRANSISTOR 2SC4176-B35
Q11	8-729-143-14	s	TRANSISTOR 2SC4176-B35
Q12	8-729-143-14	s	TRANSISTOR 2SC4176-B35
Q13	8-729-143-14	s	TRANSISTOR 2SC4176-B35
Q14	8-729-143-14	s	TRANSISTOR 2SC4176-B35
Q15	8-729-143-14	s	TRANSISTOR 2SC4176-B35
Q16	8-729-143-14	s	TRANSISTOR 2SC4176-B35
Q17	8-729-117-32	s	TRANSISTOR 2SC4177
R1	1-218-748-11	s	METAL, CHIP 220K 0.50% 1/16W
R2	1-218-748-11	s	METAL, CHIP 220K 0.50% 1/16W
R3	1-218-748-11	s	METAL, CHIP 220K 0.50% 1/16W
R4	1-218-708-11	s	METAL, CHIP 4.7K 0.50% 1/16W
R5	1-218-708-11	s	METAL, CHIP 4.7K 0.50% 1/16W

(HN-260 BOARD)

Ref. No. or Q'ty	Part No.	SP	Description
R6	1-218-740-11	s	METAL, CHIP 100K 0.50% 1/16W
R7	1-216-853-11	s	METAL, CHIP 470K 5% 1/16W
R8	1-218-851-11	s	METAL, CHIP 1.5K 0.50% 1/16W
R9	1-218-644-11	s	METAL, CHIP 10 0.50% 1/16W
R10	1-218-684-11	s	METAL, CHIP 470 0.50% 1/16W
R11	1-218-851-11	s	METAL, CHIP 1.5K 0.50% 1/16W
R12	1-218-744-11	s	METAL, CHIP 150K 0.50% 1/16W
R13	1-218-704-11	s	METAL, CHIP 3.3K 0.50% 1/16W
R14	1-218-740-11	s	METAL, CHIP 100K 0.50% 1/16W
R15	1-218-716-11	s	METAL, CHIP 10K 0.50% 1/16W
R16	1-216-857-11	s	METAL, CHIP 1M 5% 1/16W
R17	1-218-708-11	s	METAL, CHIP 4.7K 0.50% 1/16W
R18	1-218-708-11	s	METAL, CHIP 4.7K 0.50% 1/16W
R19	1-218-740-11	s	METAL, CHIP 100K 0.50% 1/16W
R20	1-216-852-11	s	METAL, CHIP 390K 5% 1/16W
R21	1-218-724-11	s	METAL, CHIP 22K 5% 1/16W
R22	1-218-732-11	s	METAL, CHIP 47K 0.50% 1/16W
R23	1-218-732-11	s	METAL, CHIP 47K 0.50% 1/16W
R24	1-216-298-00	s	METAL, CHIP 2.2 5% 1/10W
R25	1-216-298-00	s	METAL, CHIP 2.2 5% 1/10W
R26	1-218-740-11	s	METAL, CHIP 100K 0.50% 1/16W
R27	1-216-821-11	s	METAL, CHIP 1K 5% 1/16W
R28	1-216-821-11	s	METAL, CHIP 1K 5% 1/16W
R29	1-216-809-11	s	METAL, CHIP 100 5% 1/16W
R30	1-216-809-11	s	METAL, CHIP 100 5% 1/16W
R31	1-216-797-11	s	METAL, CHIP 10 5% 1/16W
R32	1-216-797-11	s	METAL, CHIP 10 5% 1/16W
R33	1-216-864-11	s	METAL, CHIP 0 5% 1/16W
R34	1-216-815-11	s	METAL, CHIP 330 5% 1/16W
R35	1-216-805-11	s	METAL, CHIP 47 5% 1/16W
R36	1-216-815-11	s	METAL, CHIP 330 5% 1/16W
R37	1-216-809-11	s	METAL, CHIP 100 5% 1/16W
R38	1-216-821-11	s	METAL, CHIP 1K 5% 1/16W
R39	1-216-821-11	s	METAL, CHIP 1K 5% 1/16W
R40	1-216-809-11	s	METAL, CHIP 100 5% 1/16W
R41	1-216-809-11	s	METAL, CHIP 100 5% 1/16W
R42	1-216-797-11	s	METAL, CHIP 10 5% 1/16W
R43	1-216-797-11	s	METAL, CHIP 10 5% 1/16W
R44	1-216-864-11	s	METAL, CHIP 0 5% 1/16W
R45	1-216-815-11	s	METAL, CHIP 330 5% 1/16W
R46	1-216-805-11	s	METAL, CHIP 47 5% 1/16W
R47	1-216-815-11	s	METAL, CHIP 330 5% 1/16W
R48	1-216-809-11	s	METAL, CHIP 100 5% 1/16W
R49	1-218-740-11	s	METAL, CHIP 100K 0.50% 1/16W
R50	1-216-805-11	s	METAL, CHIP 47 5% 1/16W
R51	1-216-825-11	s	METAL, CHIP 2.2K 5% 1/16W
R52	1-216-821-11	s	METAL, CHIP 1K 5% 1/16W
R53	1-216-825-11	s	METAL, CHIP 2.2K 5% 1/16W
R54	1-216-820-11	s	METAL, CHIP 820 5% 1/16W
R55	1-216-797-11	s	METAL, CHIP 10 5% 1/16W
R56	1-216-845-11	s	METAL, CHIP 100K 5% 1/16W
R57	1-216-809-11	s	METAL, CHIP 100 5% 1/16W
R58	1-216-845-11	s	METAL, CHIP 100K 5% 1/16W
R59	1-216-810-11	s	METAL, CHIP 120 5% 1/16W
R60	1-216-813-11	s	METAL, CHIP 220 5% 1/16W
R61	1-216-815-11	s	METAL, CHIP 330 5% 1/16W
R62	1-216-817-11	s	METAL, CHIP 470 5% 1/16W
R63	1-216-841-11	s	METAL, CHIP 47K 5% 1/16W
R64	1-216-821-11	s	METAL, CHIP 1K 5% 1/16W
R65	1-216-825-11	s	METAL, CHIP 2.2K 5% 1/16W

(HN-260 BOARD)

Ref. No. or Q'ty	Part No.	SP	Description
R66	1-216-821-11	s	METAL, CHIP 1K 5% 1/16W
R67	1-216-825-11	s	METAL, CHIP 2.2K 5% 1/16W
R68	1-216-820-11	s	METAL, CHIP 820 5% 1/16W
R69	1-216-797-11	s	METAL, CHIP 10 5% 1/16W
R70	1-216-825-11	s	METAL, CHIP 2.2K 5% 1/16W
R71	1-216-821-11	s	METAL, CHIP 1K 5% 1/16W
R72	1-216-825-11	s	METAL, CHIP 2.2K 5% 1/16W
R73	1-216-820-11	s	METAL, CHIP 820 5% 1/16W
R74	1-216-797-11	s	METAL, CHIP 10 5% 1/16W
R75	1-216-809-11	s	METAL, CHIP 100 5% 1/16W
R76	1-216-815-11	s	METAL, CHIP 330 5% 1/16W
R77	1-216-815-11	s	METAL, CHIP 330 5% 1/16W
R78	1-216-817-11	s	METAL, CHIP 470 5% 1/16W
R79	1-216-817-11	s	METAL, CHIP 470 5% 1/16W
R80	1-216-828-11	s	METAL, CHIP 3.9K 5% 1/16W
RB1	1-236-907-11	s	RESISTOR BLOCK, CHIP 100KX4
RB2	1-236-904-11	s	RESISTOR BLOCK, CHIP 1KX4
RB3	1-239-407-11	s	NETWORK RESISTOR (CHIP) 330
RV1	1-241-267-11	s	RES, ADJ, CERMET 100K
S1	1-692-881-41	s	SWITCH, SLIDE
S2	1-692-032-21	s	SWITCH, TACTILE (HORIZONTAL)
S3	1-692-032-21	s	SWITCH, TACTILE (HORIZONTAL)
S4	1-571-658-11	s	SWITCH, SLIDE

HP-93 BOARD

Ref. No. or Q'ty	Part No.	SP	Description
1pc	A-8321-459-A	o	MOUNTED CIRCUIT BOARD, HP-93
C1	1-164-161-11	s	CERAMIC, CHIP 0.0022uF 10% 50V
C2	1-164-161-11	s	CERAMIC, CHIP 0.0022uF 10% 50V
CN1	1-580-057-11	o	PIN, CONNECTOR (SMD) 4P
CN10	1-564-719-11	o	PIN HEADER, ANGLE 3P
F1	⚠ 1-533-282-21	s	LINK, IC
FL1	1-239-895-11	s	FILTER, EMI (SMD)
J1	1-507-980-41	s	JACK, MINI
L1	1-412-170-11	s	INDUCTOR 0.47uH
L2	1-410-389-31	s	INDUCTOR, CHIP 47uH
Q1	8-729-013-37	s	TRANSISTOR 2SC4213-AB-TE85L
Q2	8-729-013-37	s	TRANSISTOR 2SC4213-AB-TE85L
R1	1-216-607-11	s	METAL, CHIP 15 0.50% 1/10W
R2	1-216-607-11	s	METAL, CHIP 15 0.50% 1/10W
R4	1-216-651-11	s	METAL, CHIP 1K 0.5% 1/10W
R5	1-216-651-11	s	METAL, CHIP 1K 0.5% 1/10W

IF-716 BOARD

Note
*u: Serial No.10056 and higher (707 SY)
30011 and higher (707 J)
10106 and higher (709WS SY)
30006 and higher (709WS J/790WS J)
10091 and higher (790WS SY)
40121 and higher (707P)
40191 and higher (709WSP)
40336 and higher (790WSP)
*v: Serial No.10001 through 10055 (707 SY)
30001 through 30010 (707 J)
10001 through 10105 (709WS SY)
30001 through 30005 (709WS J/790WS J)
10001 through 10090 (790WS SY)
40001 through 40120 (707P)
40001 through 40190 (709WSP)
40001 through 40335 (790WSP)

Ref. No. or Q'ty	Part No.	SP	Description
1pc	A-8322-786-A	o	MOUTED CIRCUIT BOARD, IF-716
C1	1-163-037-11	s	CERAMIC, CHIP 0.022uF 10% 25V
C2	1-111-253-11	s	TANTALUM 100uF 20% 6.3V
C3	1-163-227-11	s	CERAMIC, CHIP 10PF 0.5PF 50V
C4	1-163-037-11	s	CERAMIC, CHIP 0.022uF 10% 25V
C5	1-163-037-11	s	CERAMIC, CHIP 0.022uF 10% 25V
C6	1-163-227-11	s	CERAMIC, CHIP 10PF 0.5PF 50V
C7	1-163-227-11	s	CERAMIC, CHIP 10PF 0.5PF 50V
C8	1-163-037-11	s	CERAMIC, CHIP 0.022uF 10% 25V
C9	1-115-581-11	s	TANTALUM, CHIP 100uF 20% 16
C10	1-115-581-11	s	TANTALUM, CHIP 100uF 20% 16
C11	1-104-913-11	s	TANTALUM, CHIP 10uF 20% 16V
C12	1-135-177-21	s	TANTALUM, CHIP 1uF 10% 25V
C13	1-163-038-00	s	CERAMIC, CHIP 0.1uF 25V
C14	1-163-038-00	s	CERAMIC, CHIP 0.1uF 25V
C15	1-107-686-11	s	TANTALUM, CHIP 4.7uF 20% 16V
C16	1-163-038-00	s	CERAMIC, CHIP 0.1uF 25V
C17	1-107-686-11	s	TANTALUM, CHIP 4.7uF 20% 16V
C18	1-163-038-00	s	CERAMIC, CHIP 0.1uF 25V
C19	1-163-038-00	s	CERAMIC, CHIP 0.1uF 25V
C20	1-107-686-11	s	TANTALUM, CHIP 4.7uF 20% 16V
CN100	1-580-536-11	s	CONNECTOR, LY 14P, MALE
CN200	1-506-494-11	s	CONNECTOR 15P, MALE
CN300	1-566-764-11	o	CONNECTOR 9P, MALE
CN400	1-566-763-11	o	CONNECTOR 8P, MAEL
CN500	1-566-767-11	o	CONNECTOR 12P, MALE
CN600	1-566-762-11	o	CONNECTOR 7P, MALE
D1	8-719-157-20	s	DIODE RD4.3M-B
D2	8-719-157-20	s	DIODE RD4.3M-B
D101	8-719-800-76	s	DIODE 1SS226
FB1	1-543-622-11	s	FERRITE 0uH
FB2	1-543-622-11	s	FERRITE 0uH
FB3	1-543-622-11	s	FERRITE 0uH
FB4	1-543-622-11	s	FERRITE 0uH
FB5	1-543-622-11	s	FERRITE 0uH
FB6	1-543-622-11	s	FERRITE 0uH
FB7	1-543-622-11	s	FERRITE 0uH
FB8	1-543-622-11	s	FERRITE 0uH
FB9	1-543-622-11	s	FERRITE 0uH
FB10	1-543-622-11	s	FERRITE 0uH
FB11	1-543-622-11	s	FERRITE 0uH

(IF-716 BOARD)

Ref. No. or Q'ty	Part No.	SP	Description
IC1	8-759-700-84	s	IC NJM2041M-D
IC2	8-759-700-84	s	IC NJM2041M-D
IC3	8-759-710-78	s	IC NJM082BM
IC4	8-759-710-88	s	IC NJM431U
IC101	8-759-175-04	s	IC PCF8574T-T
IC102	8-759-678-06	s	IC CAT24WC02JI-TE13
IC103	8-759-700-07	s	IC NJM2903M
L1	1-410-737-31	s	INDUCTOR CHIP 0.47uH
L2	1-410-737-31	s	INDUCTOR CHIP 0.47uH
Q1	8-729-020-94	s	TRANSISTOR 2SA1314C-TE12L
Q2	8-729-808-42	s	TRANSISTOR 2SD1624-T
Q101	8-729-027-38	s	TRANSISTOR DTA144EKA-T146
R1	1-216-659-11	s	METAL, CHIP 2.2K 0.5% 1/10W
R2	1-216-659-11	s	METAL, CHIP 2.2K 0.5% 1/10W
R3	1-216-659-11	s	METAL, CHIP 2.2K 0.5% 1/10W
R4	1-216-659-11	s	METAL, CHIP 2.2K 0.5% 1/10W
R5	1-216-659-11	s	METAL, CHIP 2.2K 0.5% 1/10W
R6	1-216-659-11	s	METAL, CHIP 2.2K 0.5% 1/10W
R7	1-216-659-11	s	METAL, CHIP 2.2K 0.5% 1/10W
R8	1-216-659-11	s	METAL, CHIP 2.2K 0.5% 1/10W
R9	1-216-691-11	s	METAL, CHIP 47K 0.50% 1/10W
R10	1-216-691-11	s	METAL, CHIP 47K 0.50% 1/10W
R11	1-216-683-11	s	METAL, CHIP 22K 0.50% 1/10W
R12	1-216-661-11	s	METAL, CHIP 2.7K 0.5% 1/10W
R13	1-216-683-11	s	METAL, CHIP 22K 0.50% 1/10W
R14	1-216-647-11	s	METAL, CHIP 680 0.5% 1/10W
R15	1-216-651-11	s	METAL, CHIP 1K 0.5% 1/10W
R16	1-216-651-11	s	METAL, CHIP 1K 0.5% 1/10W
R17*u	1-216-693-11	s	RESISTOR, CHIP 56K 0.5% 1/10W
R17*v	1-216-687-11	s	METAL, CHIP 33K 0.5% 1/10W
R18*u	1-216-685-11	s	RESISTOR, CHIP 27K 0.5% 1/10W
R18*v	1-216-675-11	s	METAL, CHIP 10K 0.5% 1/10W
R19	1-216-685-11	s	METAL, CHIP 27K 0.5% 1/10W
R20	1-216-675-11	s	METAL, CHIP 10K 0.5% 1/10W
R21	1-216-651-11	s	METAL, CHIP 1K 0.5% 1/10W
R22	1-216-651-11	s	METAL, CHIP 1K 0.5% 1/10W
R23	1-216-627-11	s	METAL, CHIP 100 0.50% 1/10W
R24	1-216-651-11	s	METAL, CHIP 1K 0.5% 1/10W
R25	1-216-651-11	s	METAL, CHIP 1K 0.5% 1/10W
R26	1-216-651-11	s	METAL, CHIP 1K 0.5% 1/10W
R27	1-216-651-11	s	METAL, CHIP 1K 0.5% 1/10W
R28	1-216-651-11	s	METAL, CHIP 1K 0.5% 1/10W
R29	1-216-699-11	s	METAL, CHIP 100K 0.50% 1/10W
R30	1-216-651-11	s	METAL, CHIP 1K 0.5% 1/10W
R31	1-216-699-11	s	METAL, CHIP 100K 0.50% 1/10W
R32	1-216-699-11	s	METAL, CHIP 100K 0.50% 1/10W

IO-178 BOARD

Ref. No. or Q'ty	Part No.	SP	Description
1pc	A-8321-251-A	o	MOUNTED CIRCUIT BOARD, IO-178
C1	1-115-339-11	s	CERAMIC 0.1uF 10% 50V
CN1	1-760-388-11	o	CONNECTOR PIN (SMD) 9 PIN
FL1	1-239-896-12	s	FILTER, EMI (SMD)
FL2	1-239-896-12	s	FILTER, EMI (SMD)
FL3	1-239-895-11	s	FILTER, EMI (SMD)
FL4	1-239-895-11	s	FILTER, EMI (SMD)
FL5	1-239-895-11	s	FILTER, EMI (SMD)
R1	1-216-295-11	s	CONDUCTOR, CHIP 0
R2	1-216-295-11	s	CONDUCTOR, CHIP 0
R3	1-216-295-11	s	CONDUCTOR, CHIP 0
VDR1	1-806-497-00	s	VARISTOR ERZ-C05DK220

KY-293 BOARD

Ref. No. or Q'ty	Part No.	SP	Description
1pc	1-652-769-12	o	PC BOARD, KY-293
CN150	1-766-382-11	o	PIN, CONNECTOR (1.5MM)(SMD)10P
D101	8-719-026-39	s	DIODE CL-150UR-CD-T
D102	8-719-026-39	s	DIODE CL-150UR-CD-T
D103	8-719-026-39	s	DIODE CL-150UR-CD-T
R101	1-216-045-00	s	METAL, CHIP 680 5% 1/10W
R102	1-216-045-00	s	METAL, CHIP 680 5% 1/10W
R103	1-216-045-00	s	METAL, CHIP 680 5% 1/10W
S101	1-572-725-11	s	SWITCH, PUSH
S102	1-572-725-11	s	SWITCH, PUSH
S103	1-572-725-11	s	SWITCH, PUSH
S104	1-572-725-11	s	SWITCH, PUSH
S105	1-572-725-11	s	SWITCH, PUSH

LP-109 BOARD

Ref. No. or Q'ty	Part No.	SP	Description
1pc	1-672-928-11	o	PRINTED CIRCUIT BOARD, LP-109
1pc	2-358-583-01	o	HOLDER, LED
C101	1-115-339-11	s	CERAMIC 0.1uF 10% 50V
CN101	1-565-874-11	s	PIN, CONNECTOR (PC BOARD) 2P
D101	8-719-032-78	s	DIODE GL3UR8
R101	1-216-627-11	s	METAL, CHIP 100 0.50% 1/10W
S101	1-570-608-11	s	SWITCH, TOGGLE

LP-111 BOARD

Ref. No. or Q'ty	Part No.	SP	Description
1pc	1-672-912-12	o	PRINTED CIRCUIT BOARD, LP-111
CN101	1-695-320-21	s	PIN, CONNECTOR (1.5MM)(SMD) 2P
D101	8-719-989-53	s	DIODE CL-200HR-C-TSL
R1	1-218-684-11	s	METAL, CHIP 470 0.50% 1/16W

MA-94 BOARD

Note
*w: Serial No.10056 and higher (707 SY)
30011 and higher (707 J)
10121 and higher (709WS SY)
30006 and higher (709WS J/790WS J)
10131 and higher (790WS SY)
40156 and higher (707P)
40226 and higher (709WSP)
40401 and higher (790WSP)
*x: Serial No.10001 through 10055 (707 SY)
30001 through 30010 (707 J)
10001 through 10120 (709WS SY)
30001 through 30005 (709WS J/790WS J)
10001 through 10130 (790WS SY)
40001 through 40155 (707P)
40001 through 40225 (709WSP)
40001 through 40400 (790WSP)

Ref. No. or Q'ty	Part No.	SP	Description
1pc	A-8322-785-A	o	MOUTED CIRCUIT BOARD, MA-94
C101	1-163-251-11	s	CERAMIC, CHIP 100PF 5% 50V
C102	1-163-251-11	s	CERAMIC, CHIP 100PF 5% 50V
C103	1-163-133-00	s	CERAMIC, CHIP 470PF 5% 50V
C104	1-163-133-00	s	CERAMIC, CHIP 470PF 5% 50V
C105	1-163-133-00	s	CERAMIC, CHIP 470PF 5% 50V
C106	1-126-795-11	s	ELECT 10uF 20% 50V
C107	1-163-275-11	s	CERAMIC, CHIP 0.001uF 5% 50V
C108	1-126-795-11	s	ELECT 10uF 20% 50V
C109	1-126-795-11	s	ELECT 10uF 20% 50V
C114	1-163-037-11	s	CERAMIC, CHIP 0.022uF 10% 25V
C115	1-163-037-11	s	CERAMIC, CHIP 0.022uF 10% 25V
C116	1-163-227-11	s	CERAMIC, CHIP 10PF 0.5PF 50V
C117	1-163-227-11	s	CERAMIC, CHIP 10PF 0.5PF 50V
CN10*w	1-766-386-13	s	CONNECTOR, 3P-XLR TYPE(FEMALE)
CN10*x	1-766-386-12	s	CONNECTOR, 3P-XLR TYPE(FEMALE)
CN30	1-766-376-11	o	PIN, CONNECTOR (1.5MM)(SMD) 9P
D101	8-719-800-76	s	DIODE 1SS226
D102	8-719-800-76	s	DIODE 1SS226
IC101	8-759-700-84	s	IC NJM2041M-D
L101	1-412-137-11	s	INDUCTOR 10uH
L102	1-412-137-11	s	INDUCTOR 10uH
Q101	8-729-271-31	s	TRANSISTOR 2SC2713G
R101	1-216-083-00	s	METAL, CHIP 27K 5% 1/10W
R102	1-216-671-11	s	METAL, CHIP 6.8K 0.50% 1/10W
R103	1-216-671-11	s	METAL, CHIP 6.8K 0.50% 1/10W
R110	1-216-699-11	s	METAL, CHIP 100K 0.50% 1/10W
R111	1-216-699-11	s	METAL, CHIP 100K 0.50% 1/10W
R112	1-216-634-11	s	METAL, CHIP 200 0.50% 1/10W
R113	1-216-644-11	s	METAL, CHIP 510 0.5% 1/10W
R114	1-216-659-11	s	METAL, CHIP 2.2K 0.5% 1/10W
R115	1-216-659-11	s	METAL, CHIP 2.2K 0.5% 1/10W

MB-810 BOARD

Ref. No. or Q'ty	Part No.	SP	Description
1pc	A-8321-221-A	o	MOUNTED CIRCUIT BOARD, MB-810
14pcs	3-729-061-01	s	SCREW (M2X4.5) (TYPE 1)
C1	1-107-826-91	s	CERAMIC 0.1uF 10% 16V
C2	1-107-826-91	s	CERAMIC 0.1uF 10% 16V
C3	1-107-826-91	s	CERAMIC 0.1uF 10% 16V
C4	1-164-156-11	s	CERAMIC, CHIP 0.1uF 25V
C5	1-107-826-91	s	CERAMIC 0.1uF 10% 16V
C6	1-115-416-11	s	CERAMIC 1000PF 5% 25V
CN1	1-691-845-11	o	CONNECTOR, BOARD TO BOARD 50P
CN3	1-691-845-11	o	CONNECTOR, BOARD TO BOARD 50P
CN5	1-778-531-11	o	CONNECTOR, BOARD TO BOARD 80P
CN6	1-778-531-11	o	CONNECTOR, BOARD TO BOARD 80P
CN10	1-580-055-21	o	PIN, CONNECTOR (SMD) 2P
CN22	1-569-532-11	s	HOUSING, 30P
CN23	1-569-532-11	s	HOUSING, 30P
CN50	1-764-007-11	o	PIN, CONNECTOR (SMD) 12P
CN60	1-580-756-21	o	PIN, CONNECTOR (SMD) 7P
CN101	1-778-542-11	o	CONNECTOR, BOARD TO BOARD 52P
IC1	8-759-209-97	s	IC TC4S81F
L1	1-410-389-31	s	INDUCTOR, CHIP 47uH
L2	1-410-389-31	s	INDUCTOR, CHIP 47uH
Q1	8-729-117-32	s	TRANSISTOR 2SC4177
R1	1-218-740-11	s	METAL, CHIP 100K 0.50% 1/16W
R2	1-218-740-11	s	METAL, CHIP 100K 0.50% 1/16W
R3	1-218-740-11	s	METAL, CHIP 100K 0.50% 1/16W
R4	1-218-668-11	s	METAL, CHIP 100 0.50% 1/16W
R5	1-218-732-11	s	METAL, CHIP 47K 0.50% 1/16W
R6	1-218-676-11	s	METAL, CHIP 220 0.50% 1/16W
R7	1-216-864-11	s	METAL, CHIP 0 5% 1/16W
R8	1-216-864-11	s	METAL, CHIP 0 5% 1/16W
R9	1-216-864-11	s	METAL, CHIP 0 5% 1/16W

MB-811 BOARD

Note
*y : Serial No.10001 through 10010 (707 SY)
30001 through 30005 (707 J/709WS J/790WS J)
10001 through 10025 (709WS SY)
10001 through 10015 (790WS SY)
40001 through 40020 (707P)
40001 through 40070 (709WSP)
40001 through 40060 (790WSP)
*z : Serial No.10011 and higher (707 SY)
30006 and higher (707 J/709WS J/790WS J)
10026 and higher (709WS SY)
10016 and higher (790WS SY)
40021 and higher (707P)
40071 and higher (709WSP)
40061 and higher (790WSP)
*a': Serial No.10001 through 10020 (707 SY)
30001 through 30005 (707 J/709WS J/790WS J)
10001 through 10035 (709WS SY/790WS SY)
40001 through 40035 (707P)
40001 through 40100 (709WSP)
40001 through 40085 (790WSP)
*b': Serial No.10001 through 10055 (707 SY)
30001 through 30010 (707 J/709WS J/790WS J)
10001 through 10125 (709WS SY)
10001 through 10160 (790WS SY)
40001 through 40190 (707P)
40001 through 40255 (709WSP)
40001 through 40510 (790WSP)

Ref. No. or Q'ty	Part No.	SP	Description
1pc	A-8321-456-A	o	*MOUNTED CIRCUIT BOARD, MB-811*
15pcs*y	3-729-061-01	s	SCREW (M2X4.5) (TYPE 1)
12pcs*z	3-729-061-01	s	SCREW (M2X4.5) (TYPE 1)
C1	1-104-823-11	s	TANTALUM, CHIP 47uF 20% 16V
C2	1-164-156-11	s	CERAMIC, CHIP 0.1uF 25V
C3	1-107-826-91	s	CERAMIC 0.1uF 10% 16V
C4	1-107-826-91	s	CERAMIC 0.1uF 10% 16V
C5	1-107-826-91	s	CERAMIC 0.1uF 10% 16V
C6	1-107-826-91	s	CERAMIC 0.1uF 10% 16V
C7	1-107-826-91	s	CERAMIC 0.1uF 10% 16V
C8	1-107-826-91	s	CERAMIC 0.1uF 10% 16V
C9	1-107-826-91	s	CERAMIC 0.1uF 10% 16V
C10	1-162-995-11	s	CERAMIC, CHIP 0.022uF 50V
C11	1-107-826-91	s	CERAMIC 0.1uF 10% 16V
C12	1-107-826-91	s	CERAMIC 0.1uF 10% 16V
C13	1-107-826-91	s	CERAMIC 0.1uF 10% 16V
C14	1-107-826-91	s	CERAMIC 0.1uF 10% 16V
C15	1-107-826-91	s	CERAMIC 0.1uF 10% 16V
C16	1-107-826-91	s	CERAMIC 0.1uF 10% 16V
C17	1-107-826-91	s	CERAMIC 0.1uF 10% 16V
C18	1-162-921-11	s	CERAMIC, CHIP 33PF 5% 50V
C19	1-107-826-91	s	CERAMIC 0.1uF 10% 16V
C21	1-107-826-91	s	CERAMIC 0.1uF 10% 16V
C22	1-107-826-91	s	CERAMIC 0.1uF 10% 16V
C23	1-107-826-91	s	CERAMIC 0.1uF 10% 16V
C24	1-162-970-11	s	CERAMIC, CHIP 0.01uF 10% 25V
C25	1-104-913-11	s	TANTALUM, CHIP 10uF 20% 16V
C26	1-107-826-91	s	CERAMIC 0.1uF 10% 16V
C27	1-107-826-91	s	CERAMIC 0.1uF 10% 16V
C28	1-107-689-21	s	TANTALUM, CHIP 1uF 20% 35V
C29	1-162-995-11	s	CERAMIC, CHIP 0.022uF 50V
C30	1-107-826-91	s	CERAMIC 0.1uF 10% 16V
C31	1-164-156-11	s	CERAMIC, CHIP 0.1uF 25V
C32	1-164-156-11	s	CERAMIC, CHIP 0.1uF 25V
C33	1-128-394-11	s	ELECT 220uF 20% 10V

(MB-811 BOARD)

Ref. No. or Q'ty	Part No.	SP	Description
C50*a'	1-124-589-11	s	CAPACITOR, ELECT 47uF/16V
C201	1-107-826-91	s	CERAMIC 0.1uF 10% 16V
C202	1-107-826-91	s	CERAMIC 0.1uF 10% 16V
C203	1-107-826-91	s	CERAMIC 0.1uF 10% 16V
C204	1-107-826-91	s	CERAMIC 0.1uF 10% 16V
CN1	1-764-243-11	o	CONNECTOR (COAXIAL)
CN5	1-778-003-11	o	CONNECTOR, BOARD TO BOARD 80P
CN6	1-778-003-11	o	CONNECTOR, BOARD TO BOARD 80P
CN21	1-569-531-11	s	HOUSING, 20P
CN23	1-778-551-11	o	PIN, CONNECTOR 20P
CN31	1-695-223-21	s	PIN, CONNECTOR (SMD) 10P
CN32	1-580-056-21	o	PIN, CONNECTOR (SMD) 3P
CN33	1-580-057-11	o	PIN, CONNECTOR (SMD) 4P
CN40	1-691-551-11	o	PIN, CONNECTOR (SMD) 8P
CN51	1-695-320-21	s	PIN, CONNECTOR (1.5MM)(SMD) 2P
CN54	1-695-320-21	s	PIN, CONNECTOR (1.5MM)(SMD) 2P
CN55	1-580-055-21	o	PIN, CONNECTOR (SMD) 2P
CN109	1-750-933-21	o	PIN, CONNECTOR 12P
D1	8-719-941-86	s	DIODE DAN202U
D2	8-719-941-86	s	DIODE DAN202U
D3	8-719-404-35	s	DIODE MA141WK
D10	8-719-941-86	s	DIODE DAN202U
D11	8-719-980-38	s	DIODE SB07-03C-TB
D12	8-719-941-86	s	DIODE DAN202U
F101	1-576-122-21	s	LINK, IC
IC1*b'	8-759-175-57	s	IC CXD8820AR
IC2	8-759-173-16	s	IC TL062CPW
IC3	8-759-491-46	s	IC TC74VHCT04AFT(EL)
IC5	8-759-421-88	s	IC SN74LVC821APW-E05
IC6*b'	8-759-421-88	s	IC SN74LVC821APW-E05
IC7	8-759-588-98	s	IC SN74CBT16212ADGGR
IC10	8-759-523-81	s	IC TC74VHC08FT(EL)
IC11	8-759-523-78	s	IC TC74VHC00FT(EL)
IC101	8-759-175-04	s	IC PCF8574T-T
IC102	8-759-175-04	s	IC PCF8574T-T
IC103	8-759-175-04	s	IC PCF8574T-T
IC105	8-759-485-79	s	IC TC7SET08FU(TE85R)
Q1	8-729-028-91	s	TRANSISTOR DTA144EUA-T106
Q2	8-729-028-91	s	TRANSISTOR DTA144EUA-T106
Q3	8-729-028-91	s	TRANSISTOR DTA144EUA-T106
Q4	8-729-029-14	s	TRANSISTOR DTC144EUA-T106
Q5	8-729-029-14	s	TRANSISTOR DTC144EUA-T106
Q6	8-729-029-14	s	TRANSISTOR DTC144EUA-T106
Q7	8-729-029-14	s	TRANSISTOR DTC144EUA-T106
Q8	8-729-029-14	s	TRANSISTOR DTC144EUA-T106
Q9	8-729-029-14	s	TRANSISTOR DTC144EUA-T106
Q10	8-729-117-32	s	TRANSISTOR 2SC4177
Q11	8-729-043-74	s	TRANSISTOR SI4435DY-T1-REVA
Q12	8-729-043-74	s	TRANSISTOR SI4435DY-T1-REVA
Q13	8-729-029-14	s	TRANSISTOR DTC144EUA-T106
Q14	8-729-029-14	s	TRANSISTOR DTC144EUA-T106
Q15	8-729-029-14	s	TRANSISTOR DTC144EUA-T106
Q16	8-729-028-91	s	TRANSISTOR DTA144EUA-T106
Q20	8-729-101-07	s	TRANSISTOR 2SB798
Q21	8-729-029-14	s	TRANSISTOR DTC144EUA-T106
Q22	8-729-140-63	s	TRANSISTOR 2SA1611-M5M6
Q23	8-729-029-14	s	TRANSISTOR DTC144EUA-T106

(MB-811 BOARD)

Ref. No. or Q'ty	Part No.	SP	Description
Q24	8-729-101-07	s	TRANSISTOR 2SB798
Q25	8-729-029-14	s	TRANSISTOR DTC144EUA-T106
Q26	8-729-140-63	s	TRANSISTOR 2SA1611-M5M6
R1	1-218-692-11	s	METAL, CHIP 1K 0.50% 1/16W
R2	1-218-692-11	s	METAL, CHIP 1K 0.50% 1/16W
R3	1-218-752-11	s	METAL, CHIP 330K 0.50% 1/16W
R4	1-218-752-11	s	METAL, CHIP 330K 0.50% 1/16W
R5	1-218-692-11	s	METAL, CHIP 1K 0.50% 1/16W
R6	1-218-728-11	s	METAL, CHIP 33K 0.50% 1/16W
R7	1-216-687-11	s	METAL, CHIP 33K 0.5% 1/10W
R8	1-218-692-11	s	METAL, CHIP 1K 0.50% 1/16W
R9	1-218-748-11	s	METAL, CHIP 220K 0.50% 1/16W
R10	1-218-728-11	s	METAL, CHIP 33K 0.50% 1/16W
R11	1-216-857-11	s	METAL, CHIP 1M 5% 1/16W
R12	1-218-684-11	s	METAL, CHIP 470 0.50% 1/16W
R13	1-218-728-11	s	METAL, CHIP 33K 0.50% 1/16W
R14	1-218-728-11	s	METAL, CHIP 33K 0.50% 1/16W
R15	1-218-728-11	s	METAL, CHIP 33K 0.50% 1/16W
R16	1-218-704-11	s	METAL, CHIP 3.3K 0.50% 1/16W
R17	1-218-724-11	s	METAL, CHIP 22K 5% 1/16W
R18	1-216-857-11	s	METAL, CHIP 1M 5% 1/16W
R19	1-218-692-11	s	METAL, CHIP 1K 0.50% 1/16W
R20	1-218-748-11	s	METAL, CHIP 220K 0.50% 1/16W
R21	1-218-716-11	s	METAL, CHIP 10K 0.50% 1/16W
R22	1-216-857-11	s	METAL, CHIP 1M 5% 1/16W
R23	1-218-700-11	s	METAL, CHIP 2.2K 0.50% 1/16W
R24	1-218-680-11	s	METAL, CHIP 330 0.50% 1/16W
R25	1-218-748-11	s	METAL, CHIP 220K 0.50% 1/16W
R26	1-218-748-11	s	METAL, CHIP 220K 0.50% 1/16W
R27	1-218-748-11	s	METAL, CHIP 220K 0.50% 1/16W
R28	1-218-748-11	s	METAL, CHIP 220K 0.50% 1/16W
R29	1-218-748-11	s	METAL, CHIP 220K 0.50% 1/16W
R30	1-218-748-11	s	METAL, CHIP 220K 0.50% 1/16W
R31	1-218-748-11	s	METAL, CHIP 220K 0.50% 1/16W
R32	1-216-295-11	s	CONDUCTOR, CHIP 0
R33	1-218-668-11	s	METAL, CHIP 100 0.50% 1/16W
R34	1-218-740-11	s	METAL, CHIP 100K 0.50% 1/16W
R35	1-216-627-11	s	METAL, CHIP 100 0.50% 1/10W
R36	1-218-728-11	s	METAL, CHIP 33K 0.50% 1/16W
R37	1-218-728-11	s	METAL, CHIP 33K 0.50% 1/16W
R90	1-218-692-11	s	METAL, CHIP 1K 0.50% 1/16W
R100	1-218-700-11	s	METAL, CHIP 2.2K 0.50% 1/16W
R103	1-218-656-11	s	METAL, CHIP 33 0.50% 1/16W
R104	1-218-748-11	s	METAL, CHIP 220K 0.50% 1/16W
R111	1-218-740-11	s	METAL, CHIP 100K 0.50% 1/16W
R112	1-218-740-11	s	METAL, CHIP 100K 0.50% 1/16W
R113	1-218-740-11	s	METAL, CHIP 100K 0.50% 1/16W
R115	1-218-740-11	s	METAL, CHIP 100K 0.50% 1/16W
R116	1-216-857-11	s	METAL, CHIP 1M 5% 1/16W
R117	1-218-740-11	s	METAL, CHIP 100K 0.50% 1/16W
R118	1-218-740-11	s	METAL, CHIP 100K 0.50% 1/16W
R120	1-218-233-11	s	METAL, CHIP 47 5% 1/2W
R121	1-220-250-11	s	METAL, CHIP 10 5% 1/2W
R1114	1-218-740-11	s	METAL, CHIP 100K 0.50% 1/16W
RB18*b'	1-239-310-11	s	RESISTOR ARRAY, CHIP 220K
RB20	1-239-412-11	s	NETWORK RESISTOR (CHIP) 100
RB21	1-236-907-11	s	RESISTOR BLOCK, CHIP 100KX4
RB103	1-236-907-11	s	RESISTOR BLOCK, CHIP 100KX4
RB104	1-239-444-11	s	RESUSTIR BLOCK, CHIP 220K

(MB-811 BOARD)

Ref. No. or Q'ty	Part No.	SP	Description
RB105	1-239-412-11	s	NETWORK RESISTOR (CHIP) 100
RB106	1-239-412-11	s	NETWORK RESISTOR (CHIP) 100
RB107	1-239-412-11	s	NETWORK RESISTOR (CHIP) 100
RB108	1-239-412-11	s	NETWORK RESISTOR (CHIP) 100
RB109	1-239-444-11	s	RESUSTIR BLOCK, CHIP 220K
RB110	1-239-444-11	s	RESUSTIR BLOCK, CHIP 220K

PA-228 BOARD

Ref. No. or Q'ty	Part No.	SP	Description
C1	1-113-981-11	s	TANTALUM, CHIP 22uF 20% 20V
C2	1-164-156-11	s	CERAMIC, CHIP 0.1uF 25V
C3	1-113-981-11	s	TANTALUM, CHIP 22uF 20% 20V
C4	1-113-981-11	s	TANTALUM, CHIP 22uF 20% 20V
C5	1-107-686-11	s	TANTALUM, CHIP 4.7uF 20% 16V
C6	1-162-970-11	s	CERAMIC, CHIP 0.01uF 10% 25V
C7	1-162-964-11	s	CERAMIC, CHIP 0.001uF 10% 50V
C8	1-104-823-11	s	TANTALUM, CHIP 47uF 20% 16V
C9	1-107-686-11	s	TANTALUM, CHIP 4.7uF 20% 16V
C10	1-162-964-11	s	CERAMIC, CHIP 0.001uF 10% 50V
C11	1-162-970-11	s	CERAMIC, CHIP 0.01uF 10% 25V
C14	1-164-156-11	s	CERAMIC, CHIP 0.1uF 25V
C15	1-104-823-11	s	TANTALUM, CHIP 47uF 20% 16V
C16	1-113-981-11	s	TANTALUM, CHIP 22uF 20% 20V
C17	1-164-156-11	s	CERAMIC, CHIP 0.1uF 25V
C18	1-113-981-11	s	TANTALUM, CHIP 22uF 20% 20V
C19	1-113-981-11	s	TANTALUM, CHIP 22uF 20% 20V
C20	1-107-686-11	s	TANTALUM, CHIP 4.7uF 20% 16V
C21	1-162-970-11	s	CERAMIC, CHIP 0.01uF 10% 25V
C22	1-162-964-11	s	CERAMIC, CHIP 0.001uF 10% 50V
C23	1-162-964-11	s	CERAMIC, CHIP 0.001uF 10% 50V
C26	1-164-156-11	s	CERAMIC, CHIP 0.1uF 25V
C27	1-113-981-11	s	TANTALUM, CHIP 22uF 20% 20V
C28	1-164-156-11	s	CERAMIC, CHIP 0.1uF 25V
C29	1-113-981-11	s	TANTALUM, CHIP 22uF 20% 20V
C30	1-113-981-11	s	TANTALUM, CHIP 22uF 20% 20V
C31	1-107-686-11	s	TANTALUM, CHIP 4.7uF 20% 16V
C32	1-162-970-11	s	CERAMIC, CHIP 0.01uF 10% 25V
C33	1-113-981-11	s	TANTALUM, CHIP 22uF 20% 20V
C34	1-113-981-11	s	TANTALUM, CHIP 22uF 20% 20V
C35	1-162-964-11	s	CERAMIC, CHIP 0.001uF 10% 50V
C36	1-162-964-11	s	CERAMIC, CHIP 0.001uF 10% 50V
C39	1-164-156-11	s	CERAMIC, CHIP 0.1uF 25V
C47	1-164-156-11	s	CERAMIC, CHIP 0.1uF 25V
C48	1-164-156-11	s	CERAMIC, CHIP 0.1uF 25V
C50	1-162-915-11	s	CERAMIC, CHIP 10PF 50V
C57	1-113-981-11	s	TANTALUM, CHIP 22uF 20% 20V
C58	1-164-156-11	s	CERAMIC, CHIP 0.1uF 25V
C59	1-164-156-11	s	CERAMIC, CHIP 0.1uF 25V
C60	1-164-156-11	s	CERAMIC, CHIP 0.1uF 25V
C61	1-162-910-11	s	CERAMIC, CHIP 5PF 50V
C62	1-162-910-11	s	CERAMIC, CHIP 5PF 50V
C63	1-164-156-11	s	CERAMIC, CHIP 0.1uF 25V
C64	1-164-156-11	s	CERAMIC, CHIP 0.1uF 25V
C65	1-164-156-11	s	CERAMIC, CHIP 0.1uF 25V
C66	1-162-910-11	s	CERAMIC, CHIP 5PF 50V
C67	1-162-910-11	s	CERAMIC, CHIP 5PF 50V
C68	1-164-156-11	s	CERAMIC, CHIP 0.1uF 25V
C69	1-164-156-11	s	CERAMIC, CHIP 0.1uF 25V
C70	1-164-156-11	s	CERAMIC, CHIP 0.1uF 25V
C71	1-162-910-11	s	CERAMIC, CHIP 5PF 50V
C72	1-162-910-11	s	CERAMIC, CHIP 5PF 50V
C73	1-162-915-11	s	CERAMIC, CHIP 10PF 50V
C74	1-162-915-11	s	CERAMIC, CHIP 10PF 50V
C75	1-162-915-11	s	CERAMIC, CHIP 10PF 50V
CN1	1-506-467-11	o	CONNECTOR 2P, MALE
CN2	1-506-467-11	o	CONNECTOR 2P, MALE
CN3	1-506-467-11	o	CONNECTOR 2P, MALE
CN4	1-568-331-11	s	CONNECTOR, BOARD TO BOARD 10P

(PA-228 BOARD)

Ref. No. or Q'ty	Part No.	SP	Description
CN5	1-691-942-11	s	CONNECTOR, BOARD TO BOARD 30P
CN7	1-691-942-11	s	CONNECTOR, BOARD TO BOARD 30P
D1	8-719-041-68	s	DIODE RD3.3UH-T1
D2	8-719-029-57	s	DIODE RD2.4UH-T1
D3	8-719-041-68	s	DIODE RD3.3UH-T1
D4	8-719-041-68	s	DIODE RD3.3UH-T1
IC1	8-752-052-72	s	IC CXA1439M
IC2	8-759-082-53	s	IC TLC274CPW
IC3	8-759-196-96	s	IC TC7SH08FU-TE85R
IC4	8-759-196-96	s	IC TC7SH08FU-TE85R
IC5	8-759-337-40	s	IC NJM2904V(TE2)
IC6	8-759-392-01	s	IC TC7SH86FU-TE85R
IC7	8-759-447-77	s	IC TC7WH74FU(TE12R)
IC8	8-752-052-72	s	IC CXA1439M
IC9	8-759-196-96	s	IC TC7SH08FU-TE85R
IC10	8-759-196-96	s	IC TC7SH08FU-TE85R
IC11	8-759-392-01	s	IC TC7SH86FU-TE85R
IC12	8-759-447-77	s	IC TC7WH74FU(TE12R)
IC13	8-752-052-72	s	IC CXA1439M
IC14	8-759-196-96	s	IC TC7SH08FU-TE85R
IC15	8-759-196-96	s	IC TC7SH08FU-TE85R
IC16	8-759-392-01	s	IC TC7SH86FU-TE85R
IC17	8-759-447-77	s	IC TC7WH74FU(TE12R)
IC18	8-759-392-01	s	IC TC7SH86FU-TE85R
IC19	8-759-392-01	s	IC TC7SH86FU-TE85R
IC20	8-759-066-68	s	IC REF-03GS
IC21	8-759-392-01	s	IC TC7SH86FU-TE85R
IC22	8-759-196-96	s	IC TC7SH08FU-TE85R
IC23	8-759-196-96	s	IC TC7SH08FU-TE85R
IC25	8-759-082-61	s	IC TC4W53FU
IC26	8-759-082-61	s	IC TC4W53FU
IC27	8-759-082-61	s	IC TC4W53FU
L1	1-410-737-31	s	INDUCTOR CHIP 0.47uH
L2	1-410-737-31	s	INDUCTOR CHIP 0.47uH
L3	1-410-737-31	s	INDUCTOR CHIP 0.47uH
L4	1-410-737-31	s	INDUCTOR CHIP 0.47uH
L5	1-410-737-31	s	INDUCTOR CHIP 0.47uH
Q3	8-729-122-63	s	TRANSISTOR 2SA1226
Q4	8-729-216-22	s	TRANSISTOR 2SA1162
Q5	8-729-216-22	s	TRANSISTOR 2SA1162
Q8	8-729-122-63	s	TRANSISTOR 2SA1226
Q9	8-729-216-22	s	TRANSISTOR 2SA1162
Q12	8-729-122-63	s	TRANSISTOR 2SA1226
Q13	8-729-216-22	s	TRANSISTOR 2SA1162
R1	1-218-684-11	s	METAL, CHIP 470 0.50% 1/16W
R4	1-218-664-11	s	METAL, CHIP 68 0.50% 1/16W
R5	1-218-708-11	s	METAL, CHIP 4.7K 0.50% 1/16W
R6	1-218-700-11	s	METAL, CHIP 2.2K 0.50% 1/16W
R7	1-218-708-11	s	METAL, CHIP 4.7K 0.50% 1/16W
R9	1-218-668-11	s	METAL, CHIP 100 0.50% 1/16W
R13	1-218-724-11	s	METAL, CHIP 22K 5% 1/16W
R14	1-218-719-11	s	METAL, CHIP 13K 0.50% 1/16W
R15	1-218-716-11	s	METAL, CHIP 10K 0.50% 1/16W
R16	1-218-703-11	s	METAL, CHIP 3K 0.50% 1/16W
R17	1-218-716-11	s	METAL, CHIP 10K 0.50% 1/16W
R18	1-216-789-11	s	METAL, CHIP 2.2 5% 1/16W
R19	1-218-740-11	s	METAL, CHIP 100K 0.50% 1/16W

(PA-228 BOARD)

Ref. No. or Q'ty	Part No.	SP	Description
R20	1-218-644-11	s	METAL, CHIP 10 0.50% 1/16W
R21	1-218-692-11	s	METAL, CHIP 1K 0.50% 1/16W
R22	1-218-644-11	s	METAL, CHIP 10 0.50% 1/16W
R23	1-218-684-11	s	METAL, CHIP 470 0.50% 1/16W
R26	1-218-664-11	s	METAL, CHIP 68 0.50% 1/16W
R27	1-218-708-11	s	METAL, CHIP 4.7K 0.50% 1/16W
R28	1-218-700-11	s	METAL, CHIP 2.2K 0.50% 1/16W
R29	1-218-708-11	s	METAL, CHIP 4.7K 0.50% 1/16W
R31	1-218-668-11	s	METAL, CHIP 100 0.50% 1/16W
R35	1-218-724-11	s	METAL, CHIP 22K 5% 1/16W
R36	1-218-719-11	s	METAL, CHIP 13K 0.50% 1/16W
R37	1-218-740-11	s	METAL, CHIP 100K 0.50% 1/16W
R38	1-218-644-11	s	METAL, CHIP 10 0.50% 1/16W
R39	1-218-644-11	s	METAL, CHIP 10 0.50% 1/16W
R40	1-218-684-11	s	METAL, CHIP 470 0.50% 1/16W
R43	1-218-664-11	s	METAL, CHIP 68 0.50% 1/16W
R44	1-218-708-11	s	METAL, CHIP 4.7K 0.50% 1/16W
R45	1-218-700-11	s	METAL, CHIP 2.2K 0.50% 1/16W
R46	1-218-708-11	s	METAL, CHIP 4.7K 0.50% 1/16W
R50	1-218-668-11	s	METAL, CHIP 100 0.50% 1/16W
R52	1-218-724-11	s	METAL, CHIP 22K 5% 1/16W
R53	1-218-719-11	s	METAL, CHIP 13K 0.50% 1/16W
R54	1-218-740-11	s	METAL, CHIP 100K 0.50% 1/16W
R55	1-218-644-11	s	METAL, CHIP 10 0.50% 1/16W
R56	1-218-644-11	s	METAL, CHIP 10 0.50% 1/16W
R57	1-218-644-11	s	METAL, CHIP 10 0.50% 1/16W
R58	1-218-660-91	s	METAL, CHIP 47 0.50% 1/16W
R59	1-218-660-91	s	METAL, CHIP 47 0.50% 1/16W
R60	1-218-660-91	s	METAL, CHIP 47 0.50% 1/16W
R61	1-218-660-91	s	METAL, CHIP 47 0.50% 1/16W
R62	1-218-660-91	s	METAL, CHIP 47 0.50% 1/16W
R63	1-218-660-91	s	METAL, CHIP 47 0.50% 1/16W
R64	1-218-692-11	s	METAL, CHIP 1K 0.50% 1/16W
R65	1-218-668-11	s	METAL, CHIP 100 0.50% 1/16W
R68	1-218-668-11	s	METAL, CHIP 100 0.50% 1/16W
R70	1-218-740-11	s	METAL, CHIP 100K 0.50% 1/16W
R71	1-218-668-11	s	METAL, CHIP 100 0.50% 1/16W
R91	1-218-644-11	s	METAL, CHIP 10 0.50% 1/16W
R93	1-218-692-11	s	METAL, CHIP 1K 0.50% 1/16W
R94	1-218-692-11	s	METAL, CHIP 1K 0.50% 1/16W
R95	1-216-864-11	s	METAL, CHIP 0 5% 1/16W
R96	1-216-864-11	s	METAL, CHIP 0 5% 1/16W
R97	1-218-644-11	s	METAL, CHIP 10 0.50% 1/16W
R99	1-218-644-11	s	METAL, CHIP 10 0.50% 1/16W
R100	1-218-644-11	s	METAL, CHIP 10 0.50% 1/16W
R104	1-216-864-11	s	METAL, CHIP 0 5% 1/16W
R105	1-216-864-11	s	METAL, CHIP 0 5% 1/16W
R106	1-218-668-11	s	METAL, CHIP 100 0.50% 1/16W
R107	1-218-668-11	s	METAL, CHIP 100 0.50% 1/16W
R110	1-216-864-11	s	METAL, CHIP 0 5% 1/16W
R111	1-216-864-11	s	METAL, CHIP 0 5% 1/16W
R112	1-218-668-11	s	METAL, CHIP 100 0.50% 1/16W
R113	1-218-668-11	s	METAL, CHIP 100 0.50% 1/16W
R116	1-216-864-11	s	METAL, CHIP 0 5% 1/16W
R117	1-216-864-11	s	METAL, CHIP 0 5% 1/16W
R118	1-218-668-11	s	METAL, CHIP 100 0.50% 1/16W
R119	1-218-668-11	s	METAL, CHIP 100 0.50% 1/16W
RV1	1-237-034-11	s	RES, ADJ METAL 2K

(PA-228 BOARD)

Ref. No. or Q'ty	Part No.	SP	Description
RV2	1-237-034-11	s	RES, ADJ METAL 2K
RV3	1-237-034-11	s	RES, ADJ METAL 2K
RV4	1-237-034-11	s	RES, ADJ METAL 2K
RV5	1-237-034-11	s	RES, ADJ METAL 2K
RV6	1-237-034-11	s	RES, ADJ METAL 2K

PS-533 BOARD

Note
*c': Serial No.10056 and higher (707 SY)
30006 and higher (707 J/709WS J/790WS J)
10086 and higher (709WS SY)
10061 and higher (790WS SY)
40106 and higher (707P)
40176 and higher (709WSP)
40216 and higher (790WSP)
*d': Serial No.10001 through 10055 (707 SY)
30001 through 30005 (707 J/709WS J/790WS J)
10001 through 10085 (709WS SY)
10001 through 10060 (790WS SY)
40001 through 40105 (707P)
40001 through 40175 (709WSP)
40001 through 40215 (790WSP)

Ref. No. or Q'ty	Part No.	SP	Description
1pc	A-8321-474-A	o	MOUNTED CIRCUIT BOARD, PS-533
C101*c'	1-115-784-11	s	CAPACITOR, ELECT 270MF/25V
C101*d'	1-111-059-11	s	ELECT 220MF 20% 25V
C102	1-164-004-11	s	CERAMIC, CHIP 0.1uF 10% 25V
C103	1-164-004-11	s	CERAMIC, CHIP 0.1uF 10% 25V
C104	1-164-004-11	s	CERAMIC, CHIP 0.1uF 10% 25V
C105	1-164-004-11	s	CERAMIC, CHIP 0.1uF 10% 25V
C106	1-127-520-11	s	ELECT 68uF 20% 20V
C107	1-164-227-11	s	CERAMIC, CHIP 0.022uF 10% 25V
C108	1-163-009-11	s	CERAMIC, CHIP 0.001uF 10% 50V
C109	1-107-690-11	s	TANTALUM, CHIP 6.8uF 20% 35V
C110	1-164-227-11	s	CERAMIC, CHIP 0.022uF 10% 25V
C111	1-165-176-11	s	CERAMIC, CHIP 0.047uF 10% 16V
C112	1-107-686-11	s	TANTALUM, CHIP 4.7uF 20% 16V
C113	1-164-227-11	s	CERAMIC, CHIP 0.022uF 10% 25V
C114	1-164-004-11	s	CERAMIC, CHIP 0.1uF 10% 25V
C115	1-164-227-11	s	CERAMIC, CHIP 0.022uF 10% 25V
CN101	1-564-720-11	o	PIN HEADER, ANGLE 4P
CN102	1-564-722-11	o	CONNECTOR, 6P, MALE
D101	8-719-023-54	s	DIODE EA60QC06-F
D102	8-719-941-86	s	DIODE DAN202U
FL101	1-117-193-11	s	CERAMIC 1.5MF 50V
IC101	8-759-521-35	s	IC TL5001CD
IC102	8-759-701-36	s	IC NJM3403AM
IC103	8-729-043-74	s	TRANSISTOR SI4435DY-T1-REVA
IC104	8-729-045-16	s	TRANSISTOR SI4410DY-T1-REVA
IC105	8-729-043-74	s	TRANSISTOR SI4435DY-T1-REVA
L101	1-421-459-21	s	COIL, CHOKE
L102	1-411-968-11	s	COIL, CHOKE 33uH
Q101	8-729-029-14	s	TRANSISTOR DTC144EUA-T106
Q102	8-729-028-91	s	TRANSISTOR DTA144EUA-T106
Q103	8-729-117-32	s	TRANSISTOR 2SC4177
Q104	8-729-028-91	s	TRANSISTOR DTA144EUA-T106
Q105	8-729-141-75	s	TRANSISTOR 2SD596DV345
Q106	8-729-117-32	s	TRANSISTOR 2SC4177
Q107	8-729-140-63	s	TRANSISTOR 2SA1611-M5M6
R101	1-216-675-11	s	METAL, CHIP 10K 0.5% 1/10W
R102	1-216-675-11	s	METAL, CHIP 10K 0.5% 1/10W
R103	1-216-675-11	s	METAL, CHIP 10K 0.5% 1/10W
R104	1-218-656-11	s	METAL, CHIP 33 0.50% 1/16W
R105	1-219-684-11	s	METAL, CHIP 0.01 1% 1W
R106	1-218-740-11	s	METAL, CHIP 100K 0.50% 1/16W
R107	1-216-631-11	s	METAL, CHIP 150 0.50% 1/10W

(PS-533 BOARD)

Ref. No. or Q'ty	Part No.	SP	Description
R108	1-218-717-11	s	METAL, CHIP 11K 0.50% 1/16W
R109	1-218-740-11	s	METAL, CHIP 100K 0.50% 1/16W
R110	1-218-708-11	s	METAL, CHIP 4.7K 0.50% 1/16W
R111	1-218-692-11	s	METAL, CHIP 1K 0.50% 1/16W
R112	1-218-749-11	s	METAL, CHIP 240K 0.50% 1/16W
R113	1-218-740-11	s	METAL, CHIP 100K 0.50% 1/16W
R114	1-218-708-11	s	METAL, CHIP 4.7K 0.50% 1/16W
R115	1-218-748-11	s	METAL, CHIP 220K 0.50% 1/16W
R116	1-216-864-11	s	METAL, CHIP 0 5% 1/16W
R117	1-218-722-11	s	METAL, CHIP 18K 0.50% 1/16W
R118	1-218-692-11	s	METAL, CHIP 1K 0.50% 1/16W
R119	1-218-716-11	s	METAL, CHIP 10K 0.50% 1/16W
R120	1-216-699-11	s	METAL, CHIP 100K 0.50% 1/10W
R121	1-218-656-11	s	METAL, CHIP 33 0.50% 1/16W
R122	1-216-864-11	s	METAL, CHIP 0 5% 1/16W

RC-69 BOARD(for DVW-790WS/709WS)
----------(for DVW-709WSP/709WSP)

Ref. No. or Q'ty	Part No.	SP	Description
1pc	A-8321-706-A	o	MOUTED CIRCUIT BOARD, RC-69
C2	1-162-923-11	s	CERAMIC, CHIP 47PF 5% 50V
C3	1-104-851-11	s	TANTALUM, CHIP 10uF 20% 10V
C5	1-164-156-11	s	CERAMIC, CHIP 0.1uF 25V
C8	1-164-156-11	s	CERAMIC, CHIP 0.1uF 25V
C12	1-164-156-11	s	CERAMIC, CHIP 0.1uF 25V
C13	1-164-156-11	s	CERAMIC, CHIP 0.1uF 25V
C14	1-164-156-11	s	CERAMIC, CHIP 0.1uF 25V
C15	1-164-156-11	s	CERAMIC, CHIP 0.1uF 25V
C16	1-164-156-11	s	CERAMIC, CHIP 0.1uF 25V
C17	1-164-156-11	s	CERAMIC, CHIP 0.1uF 25V
C18	1-164-156-11	s	CERAMIC, CHIP 0.1uF 25V
C19	1-164-156-11	s	CERAMIC, CHIP 0.1uF 25V
C20	1-164-156-11	s	CERAMIC, CHIP 0.1uF 25V
C21	1-164-156-11	s	CERAMIC, CHIP 0.1uF 25V
C22	1-164-156-11	s	CERAMIC, CHIP 0.1uF 25V
C23	1-104-851-11	s	TANTALUM, CHIP 10uF 20% 10V
CN3	1-770-677-11	o	CONNECTOR, BOARD TO BOARD 50P
CN4	1-770-677-11	o	CONNECTOR, BOARD TO BOARD 50P
IC1	8-759-523-78	s	IC TC74VHC00FT(EL)
IC2	8-759-491-46	s	IC TC74VHCT04AFT(EL)
IC3	8-759-523-95	s	IC TC74VHC74FT(EL)
IC4	8-759-529-76	s	IC TC74VHC595FT(EL)
IC5	8-759-529-76	s	IC TC74VHC595FT(EL)
IC6	8-759-524-10	s	IC TC74VHC157FT(EL)
IC7	8-759-524-10	s	IC TC74VHC157FT(EL)
IC8	8-759-524-10	s	IC TC74VHC157FT(EL)
IC9	8-759-524-10	s	IC TC74VHC157FT(EL)
IC10	8-759-523-96	s	IC TC74VHC86FT(EL)
IC11	8-759-524-51	s	IC TC74VHC573FT(EL)
IC12	8-759-524-51	s	IC TC74VHC573FT(EL)
IC13	8-759-524-51	s	IC TC74VHC573FT(EL)
IC14	8-752-360-44	s	IC CXK1203AR-T4
IC15	8-752-360-44	s	IC CXK1203AR-T4
IC16	8-752-360-44	s	IC CXK1203AR-T4
IC17	8-752-360-44	s	IC CXK1203AR-T4
IC18	8-759-421-88	s	IC SN74LVC821APW-E05
IC19	8-759-421-88	s	IC SN74LVC821APW-E05
IC20	8-752-360-44	s	IC CXK1203AR-T4
IC21	8-752-360-44	s	IC CXK1203AR-T4
IC22	8-752-360-44	s	IC CXK1203AR-T4
IC23	8-752-360-44	s	IC CXK1203AR-T4
IC24	8-759-421-88	s	IC SN74LVC821APW-E05
IC25	8-759-421-88	s	IC SN74LVC821APW-E05
R1	1-216-864-11	s	METAL, CHIP 0 5% 1/16W
R2	1-218-692-11	s	METAL, CHIP 1K 0.50% 1/16W
R3	1-216-864-11	s	METAL, CHIP 0 5% 1/16W
R4	1-216-864-11	s	METAL, CHIP 0 5% 1/16W
R5	1-216-864-11	s	METAL, CHIP 0 5% 1/16W
R6	1-216-864-11	s	METAL, CHIP 0 5% 1/16W
R9	1-216-864-11	s	METAL, CHIP 0 5% 1/16W
R11	1-216-864-11	s	METAL, CHIP 0 5% 1/16W
R12	1-216-864-11	s	METAL, CHIP 0 5% 1/16W

RC-75 BOARD(for DVW-790WS/709WS)
----------(for DVW-709WSP/709WSP)

Ref. No. or Q'ty	Part No.	SP	Description
1pc	A-8321-707-A	o	MOUTED CIRCUIT BOARD, RC-75
C1	1-104-851-11	s	TANTALUM, CHIP 10uF 20% 10V
C2	1-164-156-11	s	CERAMIC, CHIP 0.1uF 25V
C3	1-164-156-11	s	CERAMIC, CHIP 0.1uF 25V
C4	1-164-156-11	s	CERAMIC, CHIP 0.1uF 25V
C5	1-164-156-11	s	CERAMIC, CHIP 0.1uF 25V
C6	1-164-156-11	s	CERAMIC, CHIP 0.1uF 25V
C7	1-164-156-11	s	CERAMIC, CHIP 0.1uF 25V
C8	1-164-156-11	s	CERAMIC, CHIP 0.1uF 25V
C9	1-164-156-11	s	CERAMIC, CHIP 0.1uF 25V
C10	1-164-156-11	s	CERAMIC, CHIP 0.1uF 25V
C11	1-164-156-11	s	CERAMIC, CHIP 0.1uF 25V
C12	1-164-156-11	s	CERAMIC, CHIP 0.1uF 25V
C13	1-164-156-11	s	CERAMIC, CHIP 0.1uF 25V
C14	1-104-851-11	s	TANTALUM, CHIP 10uF 20% 10V
C15	1-162-923-11	s	CERAMIC, CHIP 47PF 5% 50V
CN3	1-770-678-11	o	CONNECTOR, BOARD TO BOARD 50P
CN4	1-770-678-11	o	CONNECTOR, BOARD TO BOARD 50P
IC1	8-759-524-51	s	IC TC74VHC573FT(EL)
IC2	8-759-524-51	s	IC TC74VHC573FT(EL)
IC3	8-759-524-51	s	IC TC74VHC573FT(EL)
IC4	8-759-524-51	s	IC TC74VHC573FT(EL)
IC5	8-759-529-76	s	IC TC74VHC595FT(EL)
IC6	8-759-529-76	s	IC TC74VHC595FT(EL)
IC7	8-752-360-44	s	IC CXK1203AR-T4
IC8	8-752-360-44	s	IC CXK1203AR-T4
IC9	8-752-360-44	s	IC CXK1203AR-T4
IC10	8-752-360-44	s	IC CXK1203AR-T4
IC11	8-752-360-44	s	IC CXK1203AR-T4
IC12	8-752-360-44	s	IC CXK1203AR-T4
IC13	8-752-360-44	s	IC CXK1203AR-T4
IC14	8-752-360-44	s	IC CXK1203AR-T4
IC15	8-759-421-88	s	IC SN74LVC821APW-E05
IC16	8-759-421-88	s	IC SN74LVC821APW-E05
IC17	8-759-421-88	s	IC SN74LVC821APW-E05
IC18	8-759-421-88	s	IC SN74LVC821APW-E05
IC19	8-752-360-44	s	IC CXK1203AR-T4
IC20	8-752-360-44	s	IC CXK1203AR-T4
IC21	8-759-421-88	s	IC SN74LVC821APW-E05

RE-160 BOARD

Note

*e': Serial No.10056 and higher (707 SY)
30011 and higher (707 J/709WS J/790WS J)
10126 and higher (709WS SY)
10161 and higher (790WS SY)
40191 and higher (707P)
40256 and higher (709WSP)
40511 and higher (790WSP)

*f': Serial No.10001 through 10055 (707 SY)
30001 through 30010 (707 J/709WS J/790WS J)
10001 through 10125 (709WS SY)
10001 through 10160 (790WS SY)
40001 through 40190 (707P)
40001 through 40255 (709WSP)
40001 through 40510 (790WSP)

Ref. No. or Q'ty	Part No.	SP	Description
3pcs	3-729-061-01	s	SCREW (M2X4.5) (TYPE 1)
C1	1-115-339-11	s	CERAMIC 0.1uF 10% 50V
C2	1-126-399-11	s	ELECT, CHIP 10uF 20% 35V
C3	1-115-339-11	s	CERAMIC 0.1uF 10% 50V
C5	1-107-686-11	s	TANTALUM, CHIP 4.7uF 20% 16V
C7	1-127-513-00	s	ELECT 15uF 20% 25V
C8	1-115-339-11	s	CERAMIC 0.1uF 10% 50V
C101	1-115-339-11	s	CERAMIC 0.1uF 10% 50V
C102	1-127-530-11	s	ELECT 22uF 20% 20V
C103	1-115-339-11	s	CERAMIC 0.1uF 10% 50V
C104	1-117-154-11	s	ELECT 33uF 20% 16V
C105	1-115-339-11	s	CERAMIC 0.1uF 10% 50V
C106	1-111-008-11	s	ELECT 180uF 20% 10V
C201	1-115-339-11	s	CERAMIC 0.1uF 10% 50V
C202	1-127-530-11	s	ELECT 22uF 20% 20V
C203	1-115-339-11	s	CERAMIC 0.1uF 10% 50V
C204	1-117-154-11	s	ELECT 33uF 20% 16V
C205	1-115-339-11	s	CERAMIC 0.1uF 10% 50V
C206	1-111-008-11	s	ELECT 180uF 20% 10V
C300	1-115-339-11	s	CERAMIC 0.1uF 10% 50V
C301	1-163-037-11	s	CERAMIC, CHIP 0.022uF 10% 25V
C302	1-163-037-11	s	CERAMIC, CHIP 0.022uF 10% 25V
C303	1-115-339-11	s	CERAMIC 0.1uF 10% 50V
C304	1-113-577-11	s	ELECT 47uF 20% 16V
C305	1-115-339-11	s	CERAMIC 0.1uF 10% 50V
C306	1-111-034-11	s	ELECT 220uF 20% 6.3V
C307	1-127-513-00	s	ELECT 15uF 20% 25V
C400	1-115-339-11	s	CERAMIC 0.1uF 10% 50V
C401	1-163-037-11	s	CERAMIC, CHIP 0.022uF 10% 25V
C402	1-163-037-11	s	CERAMIC, CHIP 0.022uF 10% 25V
C403	1-115-339-11	s	CERAMIC 0.1uF 10% 50V
C404	1-113-577-11	s	ELECT 47uF 20% 16V
C405	1-115-339-11	s	CERAMIC 0.1uF 10% 50V
C406	1-111-034-11	s	ELECT 220uF 20% 6.3V
C407	1-127-513-00	s	ELECT 15uF 20% 25V
C700	1-115-339-11	s	CERAMIC 0.1uF 10% 50V
C701	1-163-037-11	s	CERAMIC, CHIP 0.022uF 10% 25V
C702	1-163-037-11	s	CERAMIC, CHIP 0.022uF 10% 25V
C703	1-115-339-11	s	CERAMIC 0.1uF 10% 50V
C704	1-113-577-11	s	ELECT 47uF 20% 16V
C705	1-115-339-11	s	CERAMIC 0.1uF 10% 50V
C706	1-111-034-11	s	ELECT 220uF 20% 6.3V
C707	1-127-513-00	s	ELECT 15uF 20% 25V
C800	1-115-339-11	s	CERAMIC 0.1uF 10% 50V
C801	1-163-037-11	s	CERAMIC, CHIP 0.022uF 10% 25V
C802	1-163-037-11	s	CERAMIC, CHIP 0.022uF 10% 25V

(RE-160 BOARD)

Ref. No. or Q'ty	Part No.	SP	Description
C803	1-115-339-11	s	CERAMIC 0.1uF 10% 50V
C804	1-113-577-11	s	ELECT 47uF 20% 16V
C805	1-115-339-11	s	CERAMIC 0.1uF 10% 50V
C806	1-111-034-11	s	ELECT 220uF 20% 6.3V
C807	1-127-513-00	s	ELECT 15uF 20% 25V
C901	1-115-339-11	s	CERAMIC 0.1uF 10% 50V
C902	1-127-530-11	s	ELECT 22uF 20% 20V
C903	1-115-339-11	s	CERAMIC 0.1uF 10% 50V
C904	1-111-110-11	s	ELECT 39uF 20% 50V
C905	1-115-339-11	s	CERAMIC 0.1uF 10% 50V
C906	1-111-110-11	s	ELECT 39uF 20% 50V
C907	1-115-339-11	s	CERAMIC 0.1uF 10% 50V
C908*e'	1-127-531-11	s	ELECT 33uF/20V
C908*f'	1-117-154-11	s	ELECT 33uF 20% 16V
C909	1-115-339-11	s	CERAMIC 0.1uF 10% 50V
C910	1-111-032-11	s	ELECT 120uF 20% 16V
C911	1-115-339-11	s	CERAMIC 0.1uF 10% 50V
C912	1-117-154-11	s	ELECT 33uF 20% 16V
C913	1-115-339-11	s	CERAMIC 0.1uF 10% 50V
C914	1-111-008-11	s	ELECT 180uF 20% 10V
C915	1-115-339-11	s	CERAMIC 0.1uF 10% 50V
C916	1-117-154-11	s	ELECT 33uF 20% 16V
C917	1-115-339-11	s	CERAMIC 0.1uF 10% 50V
C918	1-111-032-11	s	ELECT 120uF 20% 16V
CN1	1-573-310-11	s	CONNECTOR, BOARD TO BOARD 20P
CN2	1-573-310-11	s	CONNECTOR, BOARD TO BOARD 20P
CN4	1-695-223-21	s	PIN, CONNECTOR (SMD) 10P
D1	8-719-104-34	s	DIODE 1S2835
D2	8-719-104-34	s	DIODE 1S2835
D3	8-719-104-34	s	DIODE 1S2835
D4	8-719-104-34	s	DIODE 1S2835
D5	8-719-104-34	s	DIODE 1S2835
D6	8-719-104-34	s	DIODE 1S2835
D7	8-719-104-34	s	DIODE 1S2835
D8	8-719-104-34	s	DIODE 1S2835
D101	8-719-048-17	s	DIODE MBRS130LT3
D201	8-719-048-17	s	DIODE MBRS130LT3
D300	8-719-938-75	s	DIODE SB05-05CP
D301	8-719-938-75	s	DIODE SB05-05CP
D400	8-719-938-75	s	DIODE SB05-05CP
D401	8-719-938-75	s	DIODE SB05-05CP
D700	8-719-938-75	s	DIODE SB05-05CP
D701	8-719-938-75	s	DIODE SB05-05CP
D800	8-719-938-75	s	DIODE SB05-05CP
D801	8-719-938-75	s	DIODE SB05-05CP
D901	8-719-989-93	s	DIODE SB01-15CP-TB
D902	8-719-938-75	s	DIODE SB05-05CP
D903	8-719-980-38	s	DIODE SB07-03C-TB
D904	8-719-938-75	s	DIODE SB05-05CP
IC1	8-759-560-89	s	IC MB3761PF-ER
IC103	8-729-040-75	s	TRANSISTOR SI4953DY-T1
IC203	8-729-040-75	s	TRANSISTOR SI4953DY-T1
IC300	8-729-039-35	s	TRANSISTOR SI9435DY-T1
IC400	8-729-039-35	s	TRANSISTOR SI9435DY-T1
IC703	8-729-039-35	s	TRANSISTOR SI9435DY-T1
IC800	8-729-039-35	s	TRANSISTOR SI9435DY-T1
IC900	8-729-039-35	s	TRANSISTOR SI9435DY-T1

(RE-160 BOARD)

Ref. No. or Q'ty	Part No.	SP	Description
L101	1-409-579-11	s	INDUCTOR 8.2uH
L102	1-409-722-11	s	INDUCTOR 220uH
L103	1-409-579-11	s	INDUCTOR 8.2uH
L201	1-409-579-11	s	INDUCTOR 8.2uH
L202	1-409-722-11	s	INDUCTOR 220uH
L203	1-409-579-11	s	INDUCTOR 8.2uH
L300	1-409-579-11	s	INDUCTOR 8.2uH
L302	1-409-721-11	s	INDUCTOR 42uH
L303	1-409-579-11	s	INDUCTOR 8.2uH
L400	1-409-579-11	s	INDUCTOR 8.2uH
L402	1-409-721-11	s	INDUCTOR 42uH
L403	1-409-579-11	s	INDUCTOR 8.2uH
L701	1-409-579-11	s	INDUCTOR 8.2uH
L702	1-409-721-11	s	INDUCTOR 42uH
L703	1-409-579-11	s	INDUCTOR 8.2uH
L801	1-409-579-11	s	INDUCTOR 8.2uH
L802	1-409-721-11	s	INDUCTOR 42uH
L803	1-409-579-11	s	INDUCTOR 8.2uH
L901	1-409-579-11	s	INDUCTOR 8.2uH
L902	1-409-579-11	s	INDUCTOR 8.2uH
L903	1-409-579-11	s	INDUCTOR 8.2uH
L904	1-409-579-11	s	INDUCTOR 8.2uH
L905	1-409-579-11	s	INDUCTOR 8.2uH
Q1	8-729-027-38	s	TRANSISTOR DTA144EKA-T146
Q2	8-729-120-28	s	TRANSISTOR 2SC1623-L5L6
Q6	8-729-120-28	s	TRANSISTOR 2SC1623-L5L6
Q7	8-729-216-22	s	TRANSISTOR 2SA1162
Q8	8-729-120-28	s	TRANSISTOR 2SC1623-L5L6
Q12	8-729-120-28	s	TRANSISTOR 2SC1623-L5L6
Q101	8-729-120-28	s	TRANSISTOR 2SC1623-L5L6
Q102	8-729-112-65	s	TRANSISTOR 2SA1462
Q201	8-729-120-28	s	TRANSISTOR 2SC1623-L5L6
Q202	8-729-112-65	s	TRANSISTOR 2SA1462
Q300	8-729-012-35	s	TRANSISTOR 2SK711-BL
Q301	8-729-120-28	s	TRANSISTOR 2SC1623-L5L6
Q302	8-729-112-65	s	TRANSISTOR 2SA1462
Q303	8-729-031-39	s	TRANSISTOR MTD20N03HDL
Q400	8-729-012-35	s	TRANSISTOR 2SK711-BL
Q401	8-729-120-28	s	TRANSISTOR 2SC1623-L5L6
Q402	8-729-112-65	s	TRANSISTOR 2SA1462
Q403	8-729-031-39	s	TRANSISTOR MTD20N03HDL
Q700	8-729-012-35	s	TRANSISTOR 2SK711-BL
Q701	8-729-120-28	s	TRANSISTOR 2SC1623-L5L6
Q702	8-729-112-65	s	TRANSISTOR 2SA1462
Q704	8-729-031-39	s	TRANSISTOR MTD20N03HDL
Q800	8-729-012-35	s	TRANSISTOR 2SK711-BL
Q801	8-729-120-28	s	TRANSISTOR 2SC1623-L5L6
Q802	8-729-112-65	s	TRANSISTOR 2SA1462
Q803	8-729-031-39	s	TRANSISTOR MTD20N03HDL
Q900	8-729-012-35	s	TRANSISTOR 2SK711-BL
Q901	8-729-120-28	s	TRANSISTOR 2SC1623-L5L6
Q902	8-729-112-65	s	TRANSISTOR 2SA1462
R1	1-216-699-11	s	METAL, CHIP 100K 0.50% 1/10W
R2	1-216-686-11	s	METAL, CHIP 30K 0.50% 1/10W
R3	1-216-674-11	s	METAL, CHIP 9.1K 0.5% 1/10W
R4	1-216-696-11	s	METAL, CHIP 75K 0.50% 1/10W
R5	1-216-677-11	s	METAL, CHIP 12K 0.5% 1/10W
R6	1-216-655-11	s	METAL, CHIP 1.5K 0.50% 1/10W
R7	1-216-686-11	s	METAL, CHIP 30K 0.50% 1/10W

(RE-160 BOARD)

Ref. No. or Q'ty	Part No.	SP	Description
R8	1-216-089-91	s	METAL, CHIP 47k 5% 1/10W
R11	1-216-683-11	s	METAL, CHIP 22K 0.50% 1/10W
R12	1-216-679-11	s	METAL, CHIP 15K 0.5% 1/10W
R13	1-216-695-11	s	METAL, CHIP 68K 0.50% 1/10W
R14	1-216-691-11	s	METAL, CHIP 47K 0.50% 1/10W
R15	1-216-675-11	s	METAL, CHIP 10K 0.5% 1/10W
R20	1-216-683-11	s	METAL, CHIP 22K 0.50% 1/10W
R21	1-216-684-11	s	METAL, CHIP 24K 0.50% 1/10W
R22	1-216-089-91	s	METAL, CHIP 47k 5% 1/10W
R23	1-216-298-00	s	METAL, CHIP 2.2 5% 1/10W
R24	1-216-298-00	s	METAL, CHIP 2.2 5% 1/10W
R101	1-216-675-11	s	METAL, CHIP 10K 0.5% 1/10W
R102	1-216-001-00	s	METAL, CHIP 10 5% 1/10W
R201	1-216-675-11	s	METAL, CHIP 10K 0.5% 1/10W
R202	1-216-001-00	s	METAL, CHIP 10 5% 1/10W
R300	1-216-623-11	s	METAL, CHIP 68 0.50% 1/10W
R301	1-216-689-11	s	METAL, CHIP 39K 0.50% 1/10W
R302	1-216-675-11	s	METAL, CHIP 10K 0.5% 1/10W
R303	1-216-619-11	s	METAL, CHIP 47 0.50% 1/10W
R304	1-216-619-11	s	METAL, CHIP 47 0.50% 1/10W
R305	1-216-675-11	s	METAL, CHIP 10K 0.5% 1/10W
R306	1-216-675-11	s	METAL, CHIP 10K 0.5% 1/10W
R400	1-216-623-11	s	METAL, CHIP 68 0.50% 1/10W
R401	1-216-689-11	s	METAL, CHIP 39K 0.50% 1/10W
R402	1-216-675-11	s	METAL, CHIP 10K 0.5% 1/10W
R403	1-216-619-11	s	METAL, CHIP 47 0.50% 1/10W
R404	1-216-627-11	s	METAL, CHIP 100 0.50% 1/10W
R405	1-216-675-11	s	METAL, CHIP 10K 0.5% 1/10W
R406	1-216-675-11	s	METAL, CHIP 10K 0.5% 1/10W
R700	1-216-623-11	s	METAL, CHIP 68 0.50% 1/10W
R701	1-216-679-11	s	METAL, CHIP 15K 0.5% 1/10W
R702	1-216-675-11	s	METAL, CHIP 10K 0.5% 1/10W
R703	1-216-619-11	s	METAL, CHIP 47 0.50% 1/10W
R704	1-216-627-11	s	METAL, CHIP 100 0.50% 1/10W
R705	1-216-675-11	s	METAL, CHIP 10K 0.5% 1/10W
R706	1-216-675-11	s	METAL, CHIP 10K 0.5% 1/10W
R800	1-216-623-11	s	METAL, CHIP 68 0.50% 1/10W
R801	1-216-689-11	s	METAL, CHIP 39K 0.50% 1/10W
R802	1-216-683-11	s	METAL, CHIP 22K 0.50% 1/10W
R803	1-216-619-11	s	METAL, CHIP 47 0.50% 1/10W
R804	1-216-627-11	s	METAL, CHIP 100 0.50% 1/10W
R805	1-216-675-11	s	METAL, CHIP 10K 0.5% 1/10W
R806	1-216-675-11	s	METAL, CHIP 10K 0.5% 1/10W
R900	1-216-623-11	s	METAL, CHIP 68 0.50% 1/10W
R904	1-216-001-00	s	METAL, CHIP 10 5% 1/10W
R905	1-216-089-91	s	METAL, CHIP 47k 5% 1/10W
R906	1-216-603-11	s	METAL, CHIP 10 0.50% 1/10W
R907	1-216-603-11	s	METAL, CHIP 10 0.50% 1/10W
T901	1-431-714-11	s	TRANSFORMER, DC-DC CONVERTER

RE-161 BOARD

Ref. No. or Q'ty	Part No.	SP	Description
C1	1-126-399-11	s	ELECT, CHIP 10uF 20% 35V
C2	1-115-339-11	s	CERAMIC 0.1uF 10% 50V
C4	1-107-686-11	s	TANTALUM, CHIP 4.7uF 20% 16V
C5	1-115-339-11	s	CERAMIC 0.1uF 10% 50V
C6	1-163-133-00	s	CERAMIC, CHIP 470PF 5% 50V
C7	1-115-339-11	s	CERAMIC 0.1uF 10% 50V
C9	1-107-686-11	s	TANTALUM, CHIP 4.7uF 20% 16V
C10	1-115-339-11	s	CERAMIC 0.1uF 10% 50V
C11	1-115-339-11	s	CERAMIC 0.1uF 10% 50V
C17	1-107-686-11	s	TANTALUM, CHIP 4.7uF 20% 16V
C18	1-115-339-11	s	CERAMIC 0.1uF 10% 50V
C19	1-115-339-11	s	CERAMIC 0.1uF 10% 50V
C21	1-107-686-11	s	TANTALUM, CHIP 4.7uF 20% 16V
C22	1-115-339-11	s	CERAMIC 0.1uF 10% 50V
C23	1-115-339-11	s	CERAMIC 0.1uF 10% 50V
C101	1-107-687-11	s	TANTALUM, CHIP 3.3uF 20% 20V
C102	1-163-037-11	s	CERAMIC, CHIP 0.022uF 10% 25V
C201	1-107-687-11	s	TANTALUM, CHIP 3.3uF 20% 20V
C202	1-163-037-11	s	CERAMIC, CHIP 0.022uF 10% 25V
C301	1-107-687-11	s	TANTALUM, CHIP 3.3uF 20% 20V
C302	1-163-037-11	s	CERAMIC, CHIP 0.022uF 10% 25V
C401	1-107-687-11	s	TANTALUM, CHIP 3.3uF 20% 20V
C402	1-163-037-11	s	CERAMIC, CHIP 0.022uF 10% 25V
C701	1-107-687-11	s	TANTALUM, CHIP 3.3uF 20% 20V
C702	1-104-760-11	s	CERAMIC, CHIP 0.047uF 10% 50V
C801	1-107-687-11	s	TANTALUM, CHIP 3.3uF 20% 20V
C802	1-115-339-11	s	CERAMIC 0.1uF 10% 50V
C901	1-107-687-11	s	TANTALUM, CHIP 3.3uF 20% 20V
C902	1-163-037-11	s	CERAMIC, CHIP 0.022uF 10% 25V
CN1	1-573-338-11	s	CONNECTOR, BOARD TO BOARD 20P
CN2	1-573-338-11	s	CONNECTOR, BOARD TO BOARD 20P
IC1	8-759-066-68	s	IC REF-03GS
IC2	⚠ 8-759-260-57	s	IC TL1451ACPW-E05
IC3	8-759-260-57	s	IC TL1451ACPW-E05
IC5	8-759-260-57	s	IC TL1451ACPW-E05
IC6	8-759-260-57	s	IC TL1451ACPW-E05
Q1	8-729-027-41	s	TRANSISTOR DTA144WKA-T146
Q2	1-801-806-11	s	TRANSISTOR DTC144EKA-T146
Q3	8-729-027-44	s	TRANSISTOR DTC114TKA-T146
Q4	8-729-027-44	s	TRANSISTOR DTC114TKA-T146
Q6	8-729-027-44	s	TRANSISTOR DTC114TKA-T146
Q7	8-729-027-44	s	TRANSISTOR DTC114TKA-T146
R1	1-216-679-11	s	METAL, CHIP 15K 0.5% 1/10W
R9	1-216-041-00	s	METAL, CHIP 470 5% 1/10W
R101	1-216-667-11	s	METAL, CHIP 4.7K 0.5% 1/10W
R102	1-216-667-11	s	METAL, CHIP 4.7K 0.5% 1/10W
R103	1-216-691-11	s	METAL, CHIP 47K 0.50% 1/10W
R104	1-218-760-11	s	METAL, CHIP 220K 0.50% 1/10W
R105	1-216-684-11	s	METAL, CHIP 24K 0.50% 1/10W
R106	⚠ 1-216-684-11	s	METAL, CHIP 24K 0.50% 1/10W
R107	⚠ 1-216-664-11	s	METAL, CHIP 3.6K 0.50% 1/10W
R108	⚠ 1-216-629-11	s	METAL, CHIP 120 0.50% 1/10W
R201	1-216-667-11	s	METAL, CHIP 4.7K 0.5% 1/10W
R202	1-216-667-11	s	METAL, CHIP 4.7K 0.5% 1/10W
R203	1-216-691-11	s	METAL, CHIP 47K 0.50% 1/10W
R204	1-218-760-11	s	METAL, CHIP 220K 0.50% 1/10W
R205	1-216-684-11	s	METAL, CHIP 24K 0.50% 1/10W

(RE-161 BOARD)

Ref. No. or Q'ty	Part No.	SP	Description
R206	1-216-679-11	s	METAL, CHIP 15K 0.5% 1/10W
R207	1-216-662-11	s	METAL, CHIP 3K 0.50% 1/10W
R208	1-216-635-11	s	METAL, CHIP 220 0.5% 1/10W
R301	1-216-667-11	s	METAL, CHIP 4.7K 0.5% 1/10W
R302	1-216-667-11	s	METAL, CHIP 4.7K 0.5% 1/10W
R303	1-216-687-11	s	METAL, CHIP 33K 0.5% 1/10W
R304	1-216-691-11	s	METAL, CHIP 47K 0.50% 1/10W
R305	1-218-760-11	s	METAL, CHIP 220K 0.50% 1/10W
R306	1-216-667-11	s	METAL, CHIP 4.7K 0.5% 1/10W
R307	1-216-667-11	s	METAL, CHIP 4.7K 0.5% 1/10W
R308	1-216-629-11	s	METAL, CHIP 120 0.50% 1/10W
R309	1-216-667-11	s	METAL, CHIP 4.7K 0.5% 1/10W
R401	1-216-667-11	s	METAL, CHIP 4.7K 0.5% 1/10W
R402	1-216-667-11	s	METAL, CHIP 4.7K 0.5% 1/10W
R403	1-216-687-11	s	METAL, CHIP 33K 0.5% 1/10W
R404	1-216-691-11	s	METAL, CHIP 47K 0.50% 1/10W
R405	1-218-760-11	s	METAL, CHIP 220K 0.50% 1/10W
R406	1-216-667-11	s	METAL, CHIP 4.7K 0.5% 1/10W
R407	1-216-667-11	s	METAL, CHIP 4.7K 0.5% 1/10W
R408	1-216-662-11	s	METAL, CHIP 3K 0.50% 1/10W
R409	1-216-637-11	s	METAL, CHIP 270 0.5% 1/10W
R701	1-216-667-11	s	METAL, CHIP 4.7K 0.5% 1/10W
R702	1-216-667-11	s	METAL, CHIP 4.7K 0.5% 1/10W
R703	1-216-687-11	s	METAL, CHIP 33K 0.5% 1/10W
R704	1-216-689-11	s	METAL, CHIP 39K 0.50% 1/10W
R705	1-218-760-11	s	METAL, CHIP 220K 0.50% 1/10W
R706	1-216-675-11	s	METAL, CHIP 10K 0.5% 1/10W
R707	1-216-675-11	s	METAL, CHIP 10K 0.5% 1/10W
R708	1-216-662-11	s	METAL, CHIP 3K 0.50% 1/10W
R709	1-216-639-11	s	METAL, CHIP 330 0.5% 1/10W
R801	1-216-667-11	s	METAL, CHIP 4.7K 0.5% 1/10W
R802	1-216-667-11	s	METAL, CHIP 4.7K 0.5% 1/10W
R803	1-216-687-11	s	METAL, CHIP 33K 0.5% 1/10W
R804	1-216-689-11	s	METAL, CHIP 39K 0.50% 1/10W
R805	1-218-760-11	s	METAL, CHIP 220K 0.50% 1/10W
R806	1-216-655-11	s	METAL, CHIP 1.5K 0.50% 1/10W
R807	1-216-662-11	s	METAL, CHIP 3K 0.50% 1/10W
R808	1-216-679-11	s	METAL, CHIP 15K 0.5% 1/10W
R901	1-216-667-11	s	METAL, CHIP 4.7K 0.5% 1/10W
R902	1-216-667-11	s	METAL, CHIP 4.7K 0.5% 1/10W
R903	1-216-687-11	s	METAL, CHIP 33K 0.5% 1/10W
R904	1-216-691-11	s	METAL, CHIP 47K 0.50% 1/10W
R905	1-218-760-11	s	METAL, CHIP 220K 0.50% 1/10W
R906	1-216-684-11	s	METAL, CHIP 24K 0.50% 1/10W
R907	1-216-689-11	s	METAL, CHIP 39K 0.50% 1/10W
R908	1-216-663-11	s	METAL, CHIP 3.3K 0.5% 1/10W

RM-180 BOARD

Ref. No. or Q'ty	Part No.	SP	Description
1pc	1-672-906-11	o	PRINTED CIRCUIT BOARD, RM-180
CN6	1-691-551-11	o	PIN, CONNECTOR (SMD) 8P
CN7	1-766-696-11	o	CONNECTOR, 8P
FB1	1-543-622-11	s	FERRITE 0uH
FB2	1-543-622-11	s	FERRITE 0uH
FB3	1-543-622-11	s	FERRITE 0uH
FB4	1-543-622-11	s	FERRITE 0uH
FB5	1-543-622-11	s	FERRITE 0uH
FB6	1-543-622-11	s	FERRITE 0uH
FB7	1-543-622-11	s	FERRITE 0uH
FB8	1-543-622-11	s	FERRITE 0uH
FB9	1-543-622-11	s	FERRITE 0uH
FB10	1-543-622-11	s	FERRITE 0uH

SE-275 BOARD

Ref. No. or Q'ty	Part No.	SP	Description
1pc	A-8310-898-B	o	PRINTED CIRCUIT BOARD, SE-275
1pc	X-3678-171-1	o	PIN ASSY,DETECTION
1pc	X-3679-461-1	o	PIN ASSY(REC),DETECTION
1pc	3-679-714-02	o	HOLDER,SENSOR(A)
1pc	3-679-715-01	o	HOLDER,SENSOR(B)
5pcs	3-687-087-01	o	WASHER
C1	1-164-146-11	s	CERAMIC, CHIP 0.0033uF 10% 50V
C2	1-165-176-11	s	CERAMIC, CHIP 0.047uF 10% 16V
C3	1-164-156-11	s	CERAMIC, CHIP 0.1uF 25V
C4	1-165-176-11	s	CERAMIC, CHIP 0.047uF 10% 16V
C5	1-164-816-11	s	CERAMIC, CHIP 220PF 2% 50V
C6	1-164-146-11	s	CERAMIC, CHIP 0.0033uF 10% 50V
C7	1-164-156-11	s	CERAMIC, CHIP 0.1uF 25V
C8	1-162-927-11	s	CERAMIC, CHIP 100PF 5% 50V
CN1	1-764-007-11	o	PIN, CONNECTOR (SMD) 12P
CN2	1-580-789-21	o	PIN, CONNECTOR (SMD) 6P
CN3	1-695-320-21	s	PIN, CONNECTOR (1.5MM)(SMD) 2P
CN4	1-695-320-21	s	PIN, CONNECTOR (1.5MM)(SMD) 2P
CN5	1-695-320-21	s	PIN, CONNECTOR (1.5MM)(SMD) 2P
IC1	8-759-805-32	s	IC LA7205M
IC2	8-759-260-53	s	IC LM2903PW-E05
PD1	8-719-948-58	s	DIODE GP2S07B
PD2	8-719-948-58	s	DIODE GP2S07B
PD3	8-719-948-58	s	DIODE GP2S07B
PD4	8-719-948-58	s	DIODE GP2S07B
PD5	8-719-948-58	s	DIODE GP2S07B
PD6	8-719-948-58	s	DIODE GP2S07B
PD7	8-749-010-00	s	PHOTO INTERRUPTER GP1S33
Q1	8-729-117-32	s	TRANSISTOR 2SC4177
Q2	8-729-117-32	s	TRANSISTOR 2SC4177
Q3	8-729-117-32	s	TRANSISTOR 2SC4177
Q4	8-729-117-32	s	TRANSISTOR 2SC4177
Q5	8-729-117-32	s	TRANSISTOR 2SC4177
Q6	8-729-117-32	s	TRANSISTOR 2SC4177
Q7	8-729-117-32	s	TRANSISTOR 2SC4177
R1	1-216-818-11	s	METAL, CHIP 560 5% 1/16W
R2	1-216-818-11	s	METAL, CHIP 560 5% 1/16W
R3	1-216-814-11	s	METAL, CHIP 270 5% 1/16W
R4	1-216-841-11	s	METAL, CHIP 47K 5% 1/16W
R5	1-216-838-11	s	METAL, CHIP 27K 5% 1/16W
R6	1-216-838-11	s	METAL, CHIP 27K 5% 1/16W
R10	1-216-831-11	s	METAL, CHIP 6.8K 5% 1/16W
R11	1-216-829-11	s	METAL, CHIP 4.7K 5% 1/16W
R12	1-216-820-11	s	METAL, CHIP 820 5% 1/16W
R13	1-216-840-11	s	METAL, CHIP 39K 5% 1/16W
R14	1-218-852-11	s	METAL, CHIP 1.6K 5% 1/16W
R15	1-216-847-11	s	METAL, CHIP 150K 5% 1/16W
R16	1-216-833-91	s	METAL, CHIP 10K 5% 1/16W
RB1	1-239-446-11	s	NETWORK RESISTOR (CHIP) 330K
RB2	1-239-446-11	s	NETWORK RESISTOR (CHIP) 330K
S1	1-572-719-21	s	SWITCH, PUSH (1 KEY)
S2	1-572-719-21	s	SWITCH, PUSH (1 KEY)
S3	1-572-719-21	s	SWITCH, PUSH (1 KEY)
S4	1-572-719-21	s	SWITCH, PUSH (1 KEY)
S5	1-572-719-21	s	SWITCH, PUSH (1 KEY)

(SE-275 BOARD)

Ref. No. or Q'ty	Part No.	SP	Description
S6	1-572-719-21	s	SWITCH, PUSH (1 KEY)

SV-210 BOARD

Ref. No. or Q'ty	Part No.	SP	Description
1pc	A-8321-465-A	o	MOUNTED CIRCUIT BOARD, SV-210
1pc	X-3678-190-1	o	CASE ASSY SV,SHIELD
5pcs	3-729-061-01	s	SCREW (M2X4.5) (TYPE 1)
1pc	3-683-016-02	o	PLATE,SHIELD,SV
1pc	3-724-753-01	o	RING
1pc	3-680-060-01	o	PLATE(SV-148),ORNAMENTAL
1pc	3-729-061-01	s	SCREW (M2X4.5) (TYPE 1)
C1	1-126-391-11	s	ELECT 47uF 20% 6.3V
C2	1-107-417-11	s	ELECT 33uF 20% 25V
C3	1-107-417-11	s	ELECT 33uF 20% 25V
C4	1-162-964-11	s	CERAMIC, CHIP 0.001uF 10% 50V
C5	1-162-964-11	s	CERAMIC, CHIP 0.001uF 10% 50V
C6	1-164-245-11	s	CERAMIC, CHIP 0.015uF 10% 25V
C7	1-164-245-11	s	CERAMIC, CHIP 0.015uF 10% 25V
C8	1-164-227-11	s	CERAMIC, CHIP 0.022uF 10% 25V
C9	1-164-227-11	s	CERAMIC, CHIP 0.022uF 10% 25V
C10	1-164-227-11	s	CERAMIC, CHIP 0.022uF 10% 25V
C11	1-164-227-11	s	CERAMIC, CHIP 0.022uF 10% 25V
C12	1-164-227-11	s	CERAMIC, CHIP 0.022uF 10% 25V
C13	1-164-227-11	s	CERAMIC, CHIP 0.022uF 10% 25V
C14	1-164-227-11	s	CERAMIC, CHIP 0.022uF 10% 25V
C15	1-164-227-11	s	CERAMIC, CHIP 0.022uF 10% 25V
C16	1-164-677-11	s	CERAMIC, CHIP 0.033uF 10% 16V
C17	1-164-677-11	s	CERAMIC, CHIP 0.033uF 10% 16V
C18	1-162-927-11	s	CERAMIC, CHIP 100PF 5% 50V
C19	1-162-927-11	s	CERAMIC, CHIP 100PF 5% 50V
C20	1-164-677-11	s	CERAMIC, CHIP 0.033uF 10% 16V
C21	1-164-677-11	s	CERAMIC, CHIP 0.033uF 10% 16V
C22	1-164-227-11	s	CERAMIC, CHIP 0.022uF 10% 25V
C23	1-164-227-11	s	CERAMIC, CHIP 0.022uF 10% 25V
C24	1-164-227-11	s	CERAMIC, CHIP 0.022uF 10% 25V
C25	1-162-965-11	s	CERAMIC, CHIP 0.0015uF 10% 50V
C26	1-164-227-11	s	CERAMIC, CHIP 0.022uF 10% 25V
C27	1-164-227-11	s	CERAMIC, CHIP 0.022uF 10% 25V
C28	1-135-072-21	s	TANTALUM, CHIP 0.22uF 10% 35V
C29	1-164-227-11	s	CERAMIC, CHIP 0.022uF 10% 25V
C30	1-164-227-11	s	CERAMIC, CHIP 0.022uF 10% 25V
C31	1-135-177-21	s	TANTALUM, CHIP 1uF 10% 25V
C32	1-135-177-21	s	TANTALUM, CHIP 1uF 10% 25V
C33	1-164-677-11	s	CERAMIC, CHIP 0.033uF 10% 16V
C34	1-162-958-11	s	CERAMIC, CHIP 270PF 5% 50V
C35	1-162-966-11	s	CERAMIC, CHIP 0.0022uF 10% 50V
C36	1-164-227-11	s	CERAMIC, CHIP 0.022uF 10% 25V
C37	1-164-227-11	s	CERAMIC, CHIP 0.022uF 10% 25V
C38	1-162-923-11	s	CERAMIC, CHIP 47PF 5% 50V
C39	1-164-227-11	s	CERAMIC, CHIP 0.022uF 10% 25V
C40	1-164-156-11	s	CERAMIC, CHIP 0.1uF 25V
C41	1-162-913-11	s	CERAMIC, CHIP 8PF 50V
C42	1-162-913-11	s	CERAMIC, CHIP 8PF 50V
C43	1-164-227-11	s	CERAMIC, CHIP 0.022uF 10% 25V
C44	1-104-851-11	s	TANTALUM, CHIP 10uF 20% 10V
C45	1-164-227-11	s	CERAMIC, CHIP 0.022uF 10% 25V
C46	1-162-968-11	s	CERAMIC, CHIP 0.0047uF 10% 50V
C47	1-109-892-11	s	ELECT 47uF 20% 25V
C48	1-164-227-11	s	CERAMIC, CHIP 0.022uF 10% 25V
C49	1-164-227-11	s	CERAMIC, CHIP 0.022uF 10% 25V
C50	1-162-958-11	s	CERAMIC, CHIP 270PF 5% 50V
C51	1-164-227-11	s	CERAMIC, CHIP 0.022uF 10% 25V

(SV-210 BOARD)

Ref. No. or Q'ty	Part No.	SP	Description
C52	1-162-970-11	s	CERAMIC, CHIP 0.01uF 10% 25V
C53	1-162-966-11	s	CERAMIC, CHIP 0.0022uF 10% 50V
C54	1-164-227-11	s	CERAMIC, CHIP 0.022uF 10% 25V
C55	1-164-227-11	s	CERAMIC, CHIP 0.022uF 10% 25V
C56	1-164-677-11	s	CERAMIC, CHIP 0.033uF 10% 16V
C57	1-164-227-11	s	CERAMIC, CHIP 0.022uF 10% 25V
C58	1-162-913-11	s	CERAMIC, CHIP 8PF 50V
C59	1-162-913-11	s	CERAMIC, CHIP 8PF 50V
C60	1-162-968-11	s	CERAMIC, CHIP 0.0047uF 10% 50V
C61	1-109-892-11	s	ELECT 47uF 20% 25V
C62	1-164-227-11	s	CERAMIC, CHIP 0.022uF 10% 25V
C63	1-164-227-11	s	CERAMIC, CHIP 0.022uF 10% 25V
C64	1-164-677-11	s	CERAMIC, CHIP 0.033uF 10% 16V
C65	1-164-227-11	s	CERAMIC, CHIP 0.022uF 10% 25V
C66	1-164-227-11	s	CERAMIC, CHIP 0.022uF 10% 25V
C67	1-162-964-11	s	CERAMIC, CHIP 0.001uF 10% 50V
C68	1-164-227-11	s	CERAMIC, CHIP 0.022uF 10% 25V
C69	1-135-177-21	s	TANTALUM, CHIP 1uF 10% 25V
C70	1-162-970-11	s	CERAMIC, CHIP 0.01uF 10% 25V
C71	1-164-227-11	s	CERAMIC, CHIP 0.022uF 10% 25V
C72	1-115-340-11	s	CERAMIC 0.22uF 10% 25V
C73	1-115-340-11	s	CERAMIC 0.22uF 10% 25V
C74	1-115-340-11	s	CERAMIC 0.22uF 10% 25V
C75	1-115-340-11	s	CERAMIC 0.22uF 10% 25V
C80	1-164-227-11	s	CERAMIC, CHIP 0.022uF 10% 25V
C90	1-115-416-11	s	CERAMIC 1000PF 5% 25V
C91	1-162-927-11	s	CERAMIC, CHIP 100PF 5% 50V
C95	1-164-156-11	s	CERAMIC, CHIP 0.1uF 25V
CN2	1-580-789-21	o	PIN, CONNECTOR (SMD) 6P
D1	8-719-941-86	s	DIODE DAN202U
D2	8-719-941-86	s	DIODE DAN202U
D3	8-719-048-17	s	DIODE MBRS130LT3
D4	8-719-048-17	s	DIODE MBRS130LT3
D5	8-719-041-79	s	DIODE MA721WA-TX
D6	8-719-106-53	s	DIODE RD10M-B2
IC3	8-759-259-18	s	IC MB3793-42PNF
IC4	8-759-260-53	s	IC LM2903PW-E05
IC5	8-759-075-97	s	IC LM358PW
IC6	8-759-260-53	s	IC LM2903PW-E05
IC7	8-759-523-95	s	IC TC74VHC74FT(EL)
IC8	8-759-231-30	s	IC TC4S30F
IC9	8-759-075-97	s	IC LM358PW
IC10	8-759-260-53	s	IC LM2903PW-E05
IC11	8-759-075-97	s	IC LM358PW
IC12	8-759-260-53	s	IC LM2903PW-E05
IC13	8-759-075-97	s	IC LM358PW
IC14	8-759-276-89	s	IC BA6285FP-E2
IC15	8-759-051-48	s	IC SN74HCT541APW-E05
IC16	8-759-075-97	s	IC LM358PW
IC20	8-759-523-97	s	IC TC74VHC123AFT(EL)
IC21	8-759-196-96	s	IC TC7SH08FU-TE85R
IC22	8-759-075-97	s	IC LM358PW
L1	1-409-722-11	s	INDUCTOR 220uH
L2	1-409-722-11	s	INDUCTOR 220uH
L3	1-424-642-11	s	INDUCTOR 47uH
Q1	8-729-117-32	s	TRANSISTOR 2SC4177

(SV-210 BOARD)

Ref. No. or Q'ty	Part No.	SP	Description
Q2	8-729-140-63	s	TRANSISTOR 2SA1611-M5M6
Q3	8-729-040-75	s	TRANSISTOR SI4953DY-T1
Q4	8-729-140-63	s	TRANSISTOR 2SA1611-M5M6
Q5	8-729-120-21	s	TRANSISTOR 2SD1614-T1XL
Q6	8-729-117-32	s	TRANSISTOR 2SC4177
Q7	8-729-140-63	s	TRANSISTOR 2SA1611-M5M6
Q8	8-729-117-32	s	TRANSISTOR 2SC4177
Q9	8-729-117-32	s	TRANSISTOR 2SC4177
Q10	8-729-118-56	s	TRANSISTOR 2SK852-X2
R1	1-216-833-91	s	METAL, CHIP 10K 5% 1/16W
R2	1-216-833-91	s	METAL, CHIP 10K 5% 1/16W
R3	1-216-849-11	s	METAL, CHIP 220K 5% 1/16W
R4	1-216-837-11	s	METAL, CHIP 22K 5% 1/16W
R5	1-216-849-11	s	METAL, CHIP 220K 5% 1/16W
R6	1-216-837-11	s	METAL, CHIP 22K 5% 1/16W
R7	1-216-849-11	s	METAL, CHIP 220K 5% 1/16W
R8	1-216-848-11	s	METAL, CHIP 180K 5% 1/16W
R9	1-216-848-11	s	METAL, CHIP 180K 5% 1/16W
R10	1-216-837-11	s	METAL, CHIP 22K 5% 1/16W
R11	1-216-837-11	s	METAL, CHIP 22K 5% 1/16W
R12	1-216-839-11	s	METAL, CHIP 33K 5% 1/16W
R13	1-216-839-11	s	METAL, CHIP 33K 5% 1/16W
R14	1-216-853-11	s	METAL, CHIP 470K 5% 1/16W
R15	1-216-853-11	s	METAL, CHIP 470K 5% 1/16W
R16	1-216-857-11	s	METAL, CHIP 1M 5% 1/16W
R17	1-216-857-11	s	METAL, CHIP 1M 5% 1/16W
R18	1-216-839-11	s	METAL, CHIP 33K 5% 1/16W
R19	1-216-839-11	s	METAL, CHIP 33K 5% 1/16W
R20	1-216-833-91	s	METAL, CHIP 10K 5% 1/16W
R21	1-216-833-91	s	METAL, CHIP 10K 5% 1/16W
R22	1-216-821-11	s	METAL, CHIP 1K 5% 1/16W
R23	1-216-849-11	s	METAL, CHIP 220K 5% 1/16W
R24	1-216-833-91	s	METAL, CHIP 10K 5% 1/16W
R25	1-216-833-91	s	METAL, CHIP 10K 5% 1/16W
R26	1-216-849-11	s	METAL, CHIP 220K 5% 1/16W
R27	1-216-849-11	s	METAL, CHIP 220K 5% 1/16W
R28	1-216-833-91	s	METAL, CHIP 10K 5% 1/16W
R29	1-216-833-91	s	METAL, CHIP 10K 5% 1/16W
R30	1-218-708-11	s	METAL, CHIP 4.7K 0.50% 1/16W
R31	1-216-833-91	s	METAL, CHIP 10K 5% 1/16W
R32	1-216-845-11	s	METAL, CHIP 100K 5% 1/16W
R33	1-216-845-11	s	METAL, CHIP 100K 5% 1/16W
R34	1-216-833-91	s	METAL, CHIP 10K 5% 1/16W
R35	1-216-833-91	s	METAL, CHIP 10K 5% 1/16W
R36	1-216-845-11	s	METAL, CHIP 100K 5% 1/16W
R37	1-216-833-91	s	METAL, CHIP 10K 5% 1/16W
R38	1-216-844-11	s	METAL, CHIP 82K 5% 1/16W
R39	1-218-732-11	s	METAL, CHIP 47K 0.50% 1/16W
R40	1-218-723-91	s	METAL, CHIP 20K 0.50% 1/16W
R41	1-218-728-11	s	METAL, CHIP 33K 0.50% 1/16W
R42	1-216-853-11	s	METAL, CHIP 470K 5% 1/16W
R43	1-216-853-11	s	METAL, CHIP 470K 5% 1/16W
R44	1-218-738-11	s	METAL, CHIP 82K 0.50% 1/16W
R45	1-218-748-11	s	METAL, CHIP 220K 0.50% 1/16W
R46	1-216-854-11	s	METAL, CHIP 560K 5% 1/16W
R47	1-218-740-11	s	METAL, CHIP 100K 0.50% 1/16W
R48	1-216-829-11	s	METAL, CHIP 4.7K 5% 1/16W
R49	1-216-841-11	s	METAL, CHIP 47K 5% 1/16W
R50	1-216-829-11	s	METAL, CHIP 4.7K 5% 1/16W

(SV-210 BOARD)

Ref. No. or Q'ty	Part No.	SP	Description
R51	1-216-833-91	s	METAL, CHIP 10K 5% 1/16W
R52	1-218-724-11	s	METAL, CHIP 22K 5% 1/16W
R53	1-218-724-11	s	METAL, CHIP 22K 5% 1/16W
R54	1-216-797-11	s	METAL, CHIP 10 5% 1/16W
R55	1-216-821-11	s	METAL, CHIP 1K 5% 1/16W
R56	1-218-710-91	s	METAL 5.6K 0.50% 1/16W
R57	1-218-740-11	s	METAL, CHIP 100K 0.50% 1/16W
R58	1-218-700-11	s	METAL, CHIP 2.2K 0.50% 1/16W
R59	1-218-724-11	s	METAL, CHIP 22K 5% 1/16W
R60	1-216-847-11	s	METAL, CHIP 150K 5% 1/16W
R61	1-216-841-11	s	METAL, CHIP 47K 5% 1/16W
R62	1-218-236-91	s	METAL, CHIP 1 10% 1/4W
R63	1-218-236-91	s	METAL, CHIP 1 10% 1/4W
R64	1-218-236-91	s	METAL, CHIP 1 10% 1/4W
R65	1-218-716-11	s	METAL, CHIP 10K 0.50% 1/16W
R66	1-218-698-11	s	METAL, CHIP 1.8K 0.50% 1/16W
R67	1-218-728-11	s	METAL, CHIP 33K 0.50% 1/16W
R68	1-218-738-11	s	METAL, CHIP 82K 0.50% 1/16W
R69	1-218-748-11	s	METAL, CHIP 220K 0.50% 1/16W
R70	1-218-740-11	s	METAL, CHIP 100K 0.50% 1/16W
R71	1-216-847-11	s	METAL, CHIP 150K 5% 1/16W
R72	1-216-838-11	s	METAL, CHIP 27K 5% 1/16W
R73	1-216-829-11	s	METAL, CHIP 4.7K 5% 1/16W
R74	1-216-837-11	s	METAL, CHIP 22K 5% 1/16W
R75	1-216-845-11	s	METAL, CHIP 100K 5% 1/16W
R76	1-218-739-91	s	METAL 91K 0.50% 1/16W
R77	1-216-833-91	s	METAL, CHIP 10K 5% 1/16W
R78	1-216-797-11	s	METAL, CHIP 10 5% 1/16W
R79	1-216-833-91	s	METAL, CHIP 10K 5% 1/16W
R80	1-216-821-11	s	METAL, CHIP 1K 5% 1/16W
R81	1-218-716-11	s	METAL, CHIP 10K 0.50% 1/16W
R82	1-218-716-11	s	METAL, CHIP 10K 0.50% 1/16W
R83	1-218-716-11	s	METAL, CHIP 10K 0.50% 1/16W
R84	1-218-716-11	s	METAL, CHIP 10K 0.50% 1/16W
R85	1-216-847-11	s	METAL, CHIP 150K 5% 1/16W
R86	1-216-841-11	s	METAL, CHIP 47K 5% 1/16W
R87	1-216-833-91	s	METAL, CHIP 10K 5% 1/16W
R88	1-216-847-11	s	METAL, CHIP 150K 5% 1/16W
R89	1-216-841-11	s	METAL, CHIP 47K 5% 1/16W
R90	1-216-847-11	s	METAL, CHIP 150K 5% 1/16W
R91	1-216-841-11	s	METAL, CHIP 47K 5% 1/16W
R92	1-216-796-11	s	METAL, CHIP 8.2 5% 1/16W
R93	1-216-796-11	s	METAL, CHIP 8.2 5% 1/16W
R94	1-216-796-11	s	METAL, CHIP 8.2 5% 1/16W
R95	1-216-796-11	s	METAL, CHIP 8.2 5% 1/16W
R96	1-216-796-11	s	METAL, CHIP 8.2 5% 1/16W
R97	1-216-825-11	s	METAL, CHIP 2.2K 5% 1/16W
R98	1-216-833-91	s	METAL, CHIP 10K 5% 1/16W
R99	1-216-827-11	s	METAL, CHIP 3.3K 5% 1/16W
R100	1-216-827-11	s	METAL, CHIP 3.3K 5% 1/16W
R101	1-216-813-11	s	METAL, CHIP 220 5% 1/16W
R102	1-216-813-11	s	METAL, CHIP 220 5% 1/16W
R103	1-216-821-11	s	METAL, CHIP 1K 5% 1/16W
R104	1-216-821-11	s	METAL, CHIP 1K 5% 1/16W
R105	1-216-821-11	s	METAL, CHIP 1K 5% 1/16W
R106	1-216-821-11	s	METAL, CHIP 1K 5% 1/16W
R107	1-216-821-11	s	METAL, CHIP 1K 5% 1/16W
R108	1-216-801-11	s	METAL, CHIP 22 5% 1/16W
R109	1-216-849-11	s	METAL, CHIP 220K 5% 1/16W

(SV-210 BOARD)

Ref. No. or Q'ty	Part No.	SP	Description
R110	1-216-849-11	s	METAL, CHIP 220K 5% 1/16W
R111	1-216-849-11	s	METAL, CHIP 220K 5% 1/16W
R112	1-216-849-11	s	METAL, CHIP 220K 5% 1/16W
R113	1-216-849-11	s	METAL, CHIP 220K 5% 1/16W
R114	1-218-740-11	s	METAL, CHIP 100K 0.50% 1/16W
R115	1-216-833-91	s	METAL, CHIP 10K 5% 1/16W
R116	1-216-833-91	s	METAL, CHIP 10K 5% 1/16W
R120	1-218-738-11	s	METAL, CHIP 82K 0.50% 1/16W
R121	1-216-853-11	s	METAL, CHIP 470K 5% 1/16W
R122	1-218-748-11	s	METAL, CHIP 220K 0.50% 1/16W
R125	1-218-692-11	s	METAL, CHIP 1K 0.50% 1/16W
RB1	1-239-444-11	s	RESUSTIR BLOCK, CHIP 220K
RB2	1-236-904-11	s	RESISTOR BLOCK, CHIP 1KX4
RB3	1-239-444-11	s	RESUSTIR BLOCK, CHIP 220K
RB4	1-239-444-11	s	RESUSTIR BLOCK, CHIP 220K
RB5	1-239-444-11	s	RESUSTIR BLOCK, CHIP 220K
RB6	1-236-904-11	s	RESISTOR BLOCK, CHIP 1KX4
RB7	1-236-904-11	s	RESISTOR BLOCK, CHIP 1KX4
RB8	1-236-904-11	s	RESISTOR BLOCK, CHIP 1KX4
RB9	1-239-444-11	s	RESUSTIR BLOCK, CHIP 220K
RB10	1-239-444-11	s	RESUSTIR BLOCK, CHIP 220K
RB11	1-236-904-11	s	RESISTOR BLOCK, CHIP 1KX4
RB12	1-236-904-11	s	RESISTOR BLOCK, CHIP 1KX4
RB13	1-236-904-11	s	RESISTOR BLOCK, CHIP 1KX4
RB14	1-236-904-11	s	RESISTOR BLOCK, CHIP 1KX4
RB15	1-239-444-11	s	RESUSTIR BLOCK, CHIP 220K
RB16	1-236-904-11	s	RESISTOR BLOCK, CHIP 1KX4
RB17	1-236-904-11	s	RESISTOR BLOCK, CHIP 1KX4
RB18	1-236-904-11	s	RESISTOR BLOCK, CHIP 1KX4
RB19	1-239-444-11	s	RESUSTIR BLOCK, CHIP 220K
RB20	1-239-412-11	s	NETWORK RESISTOR (CHIP) 100
RB21	1-236-904-11	s	RESISTOR BLOCK, CHIP 1KX4
RB22	1-236-904-11	s	RESISTOR BLOCK, CHIP 1KX4
RB23	1-236-904-11	s	RESISTOR BLOCK, CHIP 1KX4
RB24	1-236-904-11	s	RESISTOR BLOCK, CHIP 1KX4
X1	1-760-271-11	s	VIBRATOR, CRYSTAL
X2	1-760-271-11	s	VIBRATOR, CRYSTAL

SW-971 BOARD

Ref. No. or Q'ty	Part No.	SP	Description
1pc	1-672-907-11	o	PRINTED CIRCUIT BOARD, SW-971
C201	1-163-251-11	s	CERAMIC, CHIP 100PF 5% 50V
C202	1-163-251-11	s	CERAMIC, CHIP 100PF 5% 50V
C203	1-163-251-11	s	CERAMIC, CHIP 100PF 5% 50V
C204	1-163-251-11	s	CERAMIC, CHIP 100PF 5% 50V
C205	1-163-251-11	s	CERAMIC, CHIP 100PF 5% 50V
C206	1-163-251-11	s	CERAMIC, CHIP 100PF 5% 50V
C207	1-163-251-11	s	CERAMIC, CHIP 100PF 5% 50V
C208	1-163-251-11	s	CERAMIC, CHIP 100PF 5% 50V
CN10	1-565-876-11	o	CONNECTOR 4P, MALE
CN20	1-580-857-11	o	CONNECTOR, BB 15P, MALE
RV201	1-223-686-11	s	RES, VAR, CARBON 5K/5K
S201	1-570-995-11	s	SWITCH, KEYBOARD
S202	1-571-679-11	s	SWITCH, TOGGLE
S203	1-571-416-11	s	SWITCH, TOGGLE

SW-972 BOARD

Ref. No. or Q'ty	Part No.	SP	Description
1pc	1-672-900-11	o	PRINTED CIRCUIT BOARD, SW-972
C1	1-163-038-00	s	CERAMIC, CHIP 0.1uF 25V
CN18	1-565-875-11	o	CONNECTOR 3P, MALE
S1	1-572-725-11	s	SWITCH, PUSH

SW-973 BOARD

Ref. No. or Q'ty	Part No.	SP	Description
1pc	1-672-927-11	o	PRINTED CIRCUIT BOARD, SW-973
CN1	1-564-718-11	o	CONNECTOR, 2P, MALE
CN3	1-565-875-11	o	CONNECTOR 3P, MALE
S1	1-762-002-11	s	SWITCH, TOGGLE

SW-983 BOARD

Ref. No. or Q'ty	Part No.	SP	Description
1pc	1-672-908-11	o	PRINTED CIRCUIT BOARD, SW-983
C1	1-163-251-11	s	CERAMIC, CHIP 100PF 5% 50V
C2	1-163-251-11	s	CERAMIC, CHIP 100PF 5% 50V
C3	1-163-251-11	s	CERAMIC, CHIP 100PF 5% 50V
CN1	1-566-759-11	o	CONNECTOR 4P, MALE
SW1	1-473-315-21	s	ENCODER, ROTARY

TC-101 BOARD

Note
*g': Serial No.10056 and higher (707 SY)
30011 and higher (707 J)
10106 and higher (709WS SY)
30006 and higher (709WS J/790WS J)
10091 and higher (790WS SY)
40121 and higher (707P)
40191 and higher (709WSP)
40336 and higher (790WSP)
*h': Serial No.10001 through 10055 (707 SY)
30001 through 30005 (707 J/709WS J/790WS J)
10001 through 10085 (709WS SY/790WS SY)
40001 through 40105 (707P)
40001 through 40175 (709WSP)
40001 through 40265 (790WSP)
*i': Serial No.10001 through 10055 (707 SY)
30001 through 30010 (707 J)
10001 through 10105 (709WS SY)
30001 through 30005 (709WS J/790WS J)
10001 through 10090 (790WS SY)
40001 through 40120 (707P)
40001 through 40190 (709WSP)
40001 through 40335 (790WSP)
*j': Serial No.10056 and higher (707 SY)
30006 and higher (707 J/709WS J/ 790WS J)
10086 and higher (709WS SY/790WS SY)
40106 and higher (707P)
40176 and higher (709WSP)
40266 and higher (790WSP)
*k': Serial No.10001 through 10055 (707 SY)
30001 through 30005 (707 J/709WS J/790WS J)
10001 through 10085 (709WS SY/790WS SY)
40001 through 40105 (707P)
40001 through 40175 (709WSP)
40001 through 40265 (790WSP)
*m': Serial No.10001 through 10055 (707 SY)
30001 through 30010 (707 J)
10001 through 10105 (709WS SY)
30001 through 30005 (709WS J/790WS J)
10001 through 10090 (790WS SY)
40001 through 40120 (707P)
40001 through 40190 (709WSP)
40001 through 40335 (790WSP)

Ref. No. or Q'ty	Part No.	SP	Description
1pc	A-8321-470-A	o	MOUNTED CIRCUIT BOARD, TC-101
1pc	3-680-207-01	o	SPERSER RUBBER2
1pc	4-937-336-61	o	HOLDER, LED
1pc	3-680-206-02	o	TC INSULATOR
1pc	3-616-674-01	o	TC INSULATOR(2)
BT801	1-528-229-11	o	BATTERY, LITHIUM CR-2450
C1	1-164-227-11	s	CERAMIC, CHIP 0.022uF 10% 25V
C2	1-164-227-11	s	CERAMIC, CHIP 0.022uF 10% 25V
C3	1-164-227-11	s	CERAMIC, CHIP 0.022uF 10% 25V
C4	1-164-227-11	s	CERAMIC, CHIP 0.022uF 10% 25V
C5	1-164-227-11	s	CERAMIC, CHIP 0.022uF 10% 25V
C6	1-104-913-11	s	TANTALUM, CHIP 10uF 20% 16V
C7	1-164-227-11	s	CERAMIC, CHIP 0.022uF 10% 25V
C8	1-104-913-11	s	TANTALUM, CHIP 10uF 20% 16V
C9	1-104-913-11	s	TANTALUM, CHIP 10uF 20% 16V
C10	1-164-227-11	s	CERAMIC, CHIP 0.022uF 10% 25V
C11	1-164-227-11	s	CERAMIC, CHIP 0.022uF 10% 25V
C12	1-135-177-21	s	TANTALUM, CHIP 1uF 10% 25V
C13	1-104-913-11	s	TANTALUM, CHIP 10uF 20% 16V
C14	1-104-823-11	s	TANTALUM, CHIP 47uF 20% 16V
C15	1-104-823-11	s	TANTALUM, CHIP 47uF 20% 16V
C16	1-164-227-11	s	CERAMIC, CHIP 0.022uF 10% 25V

(TC-101 BOARD)

Ref. No. or Q'ty	Part No.	SP	Description
C17	1-104-823-11	s	TANTALUM, CHIP 47uF 20% 16V
C18	1-107-826-91	s	CERAMIC 0.1uF 10% 16V
C19	1-128-394-11	s	ELECT 220uF 20% 10V
C20	1-107-826-91	s	CERAMIC 0.1uF 10% 16V
C21	1-107-826-91	s	CERAMIC 0.1uF 10% 16V
C22	1-107-826-91	s	CERAMIC 0.1uF 10% 16V
C23	1-107-826-91	s	CERAMIC 0.1uF 10% 16V
C24	1-107-826-91	s	CERAMIC 0.1uF 10% 16V
C25	1-107-826-91	s	CERAMIC 0.1uF 10% 16V
C26	1-162-927-11	s	CERAMIC, CHIP 100PF 5% 50V
C101	1-164-227-11	s	CERAMIC, CHIP 0.022uF 10% 25V
C102	1-111-253-11	s	TANTALUM 100uF 20% 6.3V
C103	1-164-227-11	s	CERAMIC, CHIP 0.022uF 10% 25V
C104	1-111-253-11	s	TANTALUM 100uF 20% 6.3V
C105	1-164-227-11	s	CERAMIC, CHIP 0.022uF 10% 25V
C106	1-164-227-11	s	CERAMIC, CHIP 0.022uF 10% 25V
C107	1-111-253-11	s	TANTALUM 100uF 20% 6.3V
C109	1-107-826-91	s	CERAMIC 0.1uF 10% 16V
C110	1-164-227-11	s	CERAMIC, CHIP 0.022uF 10% 25V
C111	1-164-227-11	s	CERAMIC, CHIP 0.022uF 10% 25V
C112	1-164-227-11	s	CERAMIC, CHIP 0.022uF 10% 25V
C113	1-164-227-11	s	CERAMIC, CHIP 0.022uF 10% 25V
C114	1-107-826-91	s	CERAMIC 0.1uF 10% 16V
C115	1-165-176-11	s	CERAMIC, CHIP 0.047uF 10% 16V
C116	1-165-176-11	s	CERAMIC, CHIP 0.047uF 10% 16V
C117	1-162-927-11	s	CERAMIC, CHIP 100PF 5% 50V
C118	1-162-927-11	s	CERAMIC, CHIP 100PF 5% 50V
C119	1-162-921-11	s	CERAMIC, CHIP 33PF 5% 50V
C120	1-162-921-11	s	CERAMIC, CHIP 33PF 5% 50V
C121	1-107-826-91	s	CERAMIC 0.1uF 10% 16V
C122	1-104-851-11	s	TANTALUM, CHIP 10uF 20% 10V
C123	1-104-851-11	s	TANTALUM, CHIP 10uF 20% 10V
C124	1-107-826-91	s	CERAMIC 0.1uF 10% 16V
C125	1-107-826-91	s	CERAMIC 0.1uF 10% 16V
C126	1-162-921-11	s	CERAMIC, CHIP 33PF 5% 50V
C127	1-162-923-11	s	CERAMIC, CHIP 47PF 5% 50V
C128	1-104-852-11	s	TANTALUM, CHIP 22uF 20% 10V
C129	1-162-923-11	s	CERAMIC, CHIP 47PF 5% 50V
C130	1-104-852-11	s	TANTALUM, CHIP 22uF 20% 10V
C131	1-135-259-11	s	TANTALUM, CHIP 10uF 20% 6.3V
C132	1-135-259-11	s	TANTALUM, CHIP 10uF 20% 6.3V
C133	1-107-826-91	s	CERAMIC 0.1uF 10% 16V
C134	1-135-210-11	s	TANTALUM, CHIP 4.7uF 20% 10V
C135	1-135-210-11	s	TANTALUM, CHIP 4.7uF 20% 10V
C136	1-135-259-11	s	TANTALUM, CHIP 10uF 20% 6.3V
C137	1-135-259-11	s	TANTALUM, CHIP 10uF 20% 6.3V
C138	1-113-642-11	s	TANTALUM, CHIP 47uF 20% 10V
C139	1-113-642-11	s	TANTALUM, CHIP 47uF 20% 10V
C140	1-104-752-11	s	TANTALUM, CHIP 33uF 20% 6.3V
C141	1-107-826-91	s	CERAMIC 0.1uF 10% 16V
C142	1-104-553-11	s	FILM, CHIP 0.015uF 5% 16V
C143	1-104-553-11	s	FILM, CHIP 0.015uF 5% 16V
C144	1-162-923-11	s	CERAMIC, CHIP 47PF 5% 50V
C145	1-162-923-11	s	CERAMIC, CHIP 47PF 5% 50V
C146	1-162-927-11	s	CERAMIC, CHIP 100PF 5% 50V
C147	1-164-227-11	s	CERAMIC, CHIP 0.022uF 10% 25V
C148	1-162-927-11	s	CERAMIC, CHIP 100PF 5% 50V
C149	1-164-227-11	s	CERAMIC, CHIP 0.022uF 10% 25V
C150	1-164-227-11	s	CERAMIC, CHIP 0.022uF 10% 25V
C151	1-164-227-11	s	CERAMIC, CHIP 0.022uF 10% 25V

(TC-101 BOARD)

Ref. No. or Q'ty	Part No.	SP	Description
C152	1-104-851-11	s	TANTALUM, CHIP 10uF 20% 10V
C153	1-104-851-11	s	TANTALUM, CHIP 10uF 20% 10V
C154	1-107-686-11	s	TANTALUM, CHIP 4.7uF 20% 16V
C155	1-107-686-11	s	TANTALUM, CHIP 4.7uF 20% 16V
C156	1-107-686-11	s	TANTALUM, CHIP 4.7uF 20% 16V
C157	1-107-686-11	s	TANTALUM, CHIP 4.7uF 20% 16V
C158	1-104-851-11	s	TANTALUM, CHIP 10uF 20% 10V
C159	1-107-826-91	s	CERAMIC 0.1uF 10% 16V
C160	1-162-969-11	s	CERAMIC, CHIP 0.0068uF 10% 25V
C161	1-162-969-11	s	CERAMIC, CHIP 0.0068uF 10% 25V
C162	1-162-964-11	s	CERAMIC, CHIP 0.001uF 10% 50V
C163	1-162-966-11	s	CERAMIC, CHIP 0.0022uF 10% 50V
C164	1-104-851-11	s	TANTALUM, CHIP 10uF 20% 10V
C165	1-107-826-91	s	CERAMIC 0.1uF 10% 16V
C166	1-162-964-11	s	CERAMIC, CHIP 0.001uF 10% 50V
C167	1-107-826-91	s	CERAMIC 0.1uF 10% 16V
C168	1-164-227-11	s	CERAMIC, CHIP 0.022uF 10% 25V
C169	1-104-851-11	s	TANTALUM, CHIP 10uF 20% 10V
C170	1-107-826-91	s	CERAMIC 0.1uF 10% 16V
C171	1-107-826-91	s	CERAMIC 0.1uF 10% 16V
C172	1-107-826-91	s	CERAMIC 0.1uF 10% 16V
C173	1-164-227-11	s	CERAMIC, CHIP 0.022uF 10% 25V
C174	1-107-826-91	s	CERAMIC 0.1uF 10% 16V
C175	1-162-927-11	s	CERAMIC, CHIP 100PF 5% 50V
C176	1-104-851-11	s	TANTALUM, CHIP 10uF 20% 10V
C177	1-162-927-11	s	CERAMIC, CHIP 100PF 5% 50V
C178	1-162-927-11	s	CERAMIC, CHIP 100PF 5% 50V
C179	1-162-927-11	s	CERAMIC, CHIP 100PF 5% 50V
C180	1-162-927-11	s	CERAMIC, CHIP 100PF 5% 50V
C181	1-162-927-11	s	CERAMIC, CHIP 100PF 5% 50V
C182	1-162-927-11	s	CERAMIC, CHIP 100PF 5% 50V
C183	1-162-927-11	s	CERAMIC, CHIP 100PF 5% 50V
C184	1-162-927-11	s	CERAMIC, CHIP 100PF 5% 50V
C185	1-162-927-11	s	CERAMIC, CHIP 100PF 5% 50V
C186	1-162-927-11	s	CERAMIC, CHIP 100PF 5% 50V
C210	1-162-927-11	s	CERAMIC, CHIP 100PF 5% 50V
C211	1-162-927-11	s	CERAMIC, CHIP 100PF 5% 50V
C401	1-164-227-11	s	CERAMIC, CHIP 0.022uF 10% 25V
C402	1-165-176-11	s	CERAMIC, CHIP 0.047uF 10% 16V
C403	1-165-176-11	s	CERAMIC, CHIP 0.047uF 10% 16V
C404	1-162-921-11	s	CERAMIC, CHIP 33PF 5% 50V
C405	1-162-921-11	s	CERAMIC, CHIP 33PF 5% 50V
C406	1-104-851-11	s	TANTALUM, CHIP 10uF 20% 10V
C407	1-104-851-11	s	TANTALUM, CHIP 10uF 20% 10V
C408	1-162-923-11	s	CERAMIC, CHIP 47PF 5% 50V
C409	1-162-923-11	s	CERAMIC, CHIP 47PF 5% 50V
C410	1-104-851-11	s	TANTALUM, CHIP 10uF 20% 10V
C411	1-104-851-11	s	TANTALUM, CHIP 10uF 20% 10V
C412	1-107-686-11	s	TANTALUM, CHIP 4.7uF 20% 16V
C413	1-107-686-11	s	TANTALUM, CHIP 4.7uF 20% 16V
C414	1-104-851-11	s	TANTALUM, CHIP 10uF 20% 10V
C415	1-104-851-11	s	TANTALUM, CHIP 10uF 20% 10V
C416	1-110-569-11	s	TANTALUM, CHIP 47uF 20% 6.3V
C417	1-110-569-11	s	TANTALUM, CHIP 47uF 20% 6.3V
C418	1-104-851-11	s	TANTALUM, CHIP 10uF 20% 10V
C419	1-104-851-11	s	TANTALUM, CHIP 10uF 20% 10V
C420	1-107-826-91	s	CERAMIC 0.1uF 10% 16V
C421	1-104-553-11	s	FILM, CHIP 0.015uF 5% 16V
C422	1-104-553-11	s	FILM, CHIP 0.015uF 5% 16V
C423	1-162-923-11	s	CERAMIC, CHIP 47PF 5% 50V

(TC-101 BOARD)

Ref. No. or Q'ty	Part No.	SP	Description
C424	1-162-923-11	s	CERAMIC, CHIP 47PF 5% 50V
C425	1-162-927-11	s	CERAMIC, CHIP 100PF 5% 50V
C426	1-162-927-11	s	CERAMIC, CHIP 100PF 5% 50V
C427	1-164-227-11	s	CERAMIC, CHIP 0.022uF 10% 25V
C428	1-164-227-11	s	CERAMIC, CHIP 0.022uF 10% 25V
C429	1-164-227-11	s	CERAMIC, CHIP 0.022uF 10% 25V
C430	1-164-227-11	s	CERAMIC, CHIP 0.022uF 10% 25V
C431	1-104-851-11	s	TANTALUM, CHIP 10uF 20% 10V
C432	1-104-851-11	s	TANTALUM, CHIP 10uF 20% 10V
C433	1-107-686-11	s	TANTALUM, CHIP 4.7uF 20% 16V
C434	1-107-686-11	s	TANTALUM, CHIP 4.7uF 20% 16V
C435	1-107-686-11	s	TANTALUM, CHIP 4.7uF 20% 16V
C436	1-107-686-11	s	TANTALUM, CHIP 4.7uF 20% 16V
C437	1-104-851-11	s	TANTALUM, CHIP 10uF 20% 10V
C438	1-107-826-91	s	CERAMIC 0.1uF 10% 16V
C439	1-104-851-11	s	TANTALUM, CHIP 10uF 20% 10V
C440	1-162-966-11	s	CERAMIC, CHIP 0.0022uF 10% 50V
C441	1-107-826-91	s	CERAMIC 0.1uF 10% 16V
C442	1-162-964-11	s	CERAMIC, CHIP 0.001uF 10% 50V
C443	1-162-969-11	s	CERAMIC, CHIP 0.0068uF 10% 25V
C444	1-162-969-11	s	CERAMIC, CHIP 0.0068uF 10% 25V
C445	1-162-964-11	s	CERAMIC, CHIP 0.001uF 10% 50V
C446	1-107-826-91	s	CERAMIC 0.1uF 10% 16V
C447	1-107-826-91	s	CERAMIC 0.1uF 10% 16V
C448	1-107-826-91	s	CERAMIC 0.1uF 10% 16V
C449	1-104-851-11	s	TANTALUM, CHIP 10uF 20% 10V
C450	1-164-227-11	s	CERAMIC, CHIP 0.022uF 10% 25V
C451	1-107-826-91	s	CERAMIC 0.1uF 10% 16V
C452	1-107-826-91	s	CERAMIC 0.1uF 10% 16V
C453	1-104-851-11	s	TANTALUM, CHIP 10uF 20% 10V
C454	1-104-851-11	s	TANTALUM, CHIP 10uF 20% 10V
C455	1-162-927-11	s	CERAMIC, CHIP 100PF 5% 50V
C456	1-162-927-11	s	CERAMIC, CHIP 100PF 5% 50V
C601	1-104-851-11	s	TANTALUM, CHIP 10uF 20% 10V
C602	1-104-851-11	s	TANTALUM, CHIP 10uF 20% 10V
C603	1-107-826-91	s	CERAMIC 0.1uF 10% 16V
C604	1-107-826-91	s	CERAMIC 0.1uF 10% 16V
C605	1-107-826-91	s	CERAMIC 0.1uF 10% 16V
C606	1-107-826-91	s	CERAMIC 0.1uF 10% 16V
C607	1-104-851-11	s	TANTALUM, CHIP 10uF 20% 10V
C608	1-104-851-11	s	TANTALUM, CHIP 10uF 20% 10V
C609	1-107-826-91	s	CERAMIC 0.1uF 10% 16V
C610	1-107-826-91	s	CERAMIC 0.1uF 10% 16V
C611	1-104-851-11	s	TANTALUM, CHIP 10uF 20% 10V
C612	1-104-851-11	s	TANTALUM, CHIP 10uF 20% 10V
C613	1-107-826-91	s	CERAMIC 0.1uF 10% 16V
C614	1-107-826-91	s	CERAMIC 0.1uF 10% 16V
C615	1-107-826-91	s	CERAMIC 0.1uF 10% 16V
C616	1-107-826-91	s	CERAMIC 0.1uF 10% 16V
C617	1-104-852-11	s	TANTALUM, CHIP 22uF 20% 10V
C618	1-104-852-11	s	TANTALUM, CHIP 22uF 20% 10V
C619	1-104-851-11	s	TANTALUM, CHIP 10uF 20% 10V
C620	1-104-851-11	s	TANTALUM, CHIP 10uF 20% 10V
C621	1-104-852-11	s	TANTALUM, CHIP 22uF 20% 10V
C622	1-104-852-11	s	TANTALUM, CHIP 22uF 20% 10V
C623	1-104-851-11	s	TANTALUM, CHIP 10uF 20% 10V
C624	1-104-851-11	s	TANTALUM, CHIP 10uF 20% 10V
C625	1-164-227-11	s	CERAMIC, CHIP 0.022uF 10% 25V
C626	1-162-927-11	s	CERAMIC, CHIP 100PF 5% 50V
C627	1-162-927-11	s	CERAMIC, CHIP 100PF 5% 50V

(TC-101 BOARD)

Ref. No. or Q'ty	Part No.	SP	Description
C628	1-162-927-11	s	CERAMIC, CHIP 100PF 5% 50V
C629	1-162-927-11	s	CERAMIC, CHIP 100PF 5% 50V
C630	1-104-851-11	s	TANTALUM, CHIP 10uF 20% 10V
C631	1-164-227-11	s	CERAMIC, CHIP 0.022uF 10% 25V
C632	1-164-227-11	s	CERAMIC, CHIP 0.022uF 10% 25V
C633	1-104-851-11	s	TANTALUM, CHIP 10uF 20% 10V
C634	1-164-227-11	s	CERAMIC, CHIP 0.022uF 10% 25V
C635	1-164-227-11	s	CERAMIC, CHIP 0.022uF 10% 25V
C636	1-104-851-11	s	TANTALUM, CHIP 10uF 20% 10V
C637	1-164-227-11	s	CERAMIC, CHIP 0.022uF 10% 25V
C638	1-164-227-11	s	CERAMIC, CHIP 0.022uF 10% 25V
C639	1-104-851-11	s	TANTALUM, CHIP 10uF 20% 10V
C640	1-104-851-11	s	TANTALUM, CHIP 10uF 20% 10V
C641	1-104-851-11	s	TANTALUM, CHIP 10uF 20% 10V
C642	1-104-543-11	s	FILM 0.0022uF 5% 50V
C643	1-104-539-11	s	FILM 0.001uF 5% 50V
C644	1-104-543-11	s	FILM 0.0022uF 5% 50V
C645	1-104-539-11	s	FILM 0.001uF 5% 50V
C646	1-104-851-11	s	TANTALUM, CHIP 10uF 20% 10V
C647	1-104-851-11	s	TANTALUM, CHIP 10uF 20% 10V
C648	1-162-966-11	s	CERAMIC, CHIP 0.0022uF 10% 50V
C649	1-162-966-11	s	CERAMIC, CHIP 0.0022uF 10% 50V
C650	1-104-852-11	s	TANTALUM, CHIP 22uF 20% 10V
C651	1-162-927-11	s	CERAMIC, CHIP 100PF 5% 50V
C652	1-162-927-11	s	CERAMIC, CHIP 100PF 5% 50V
C653	1-164-227-11	s	CERAMIC, CHIP 0.022uF 10% 25V
C654	1-162-919-11	s	CERAMIC, CHIP 22PF 5% 50V
C655	1-162-919-11	s	CERAMIC, CHIP 22PF 5% 50V
C656	1-164-227-11	s	CERAMIC, CHIP 0.022uF 10% 25V
C657	1-104-851-11	s	TANTALUM, CHIP 10uF 20% 10V
C658	1-104-851-11	s	TANTALUM, CHIP 10uF 20% 10V
C659	1-162-923-11	s	CERAMIC, CHIP 47PF 5% 50V
C660	1-162-923-11	s	CERAMIC, CHIP 47PF 5% 50V
C661	1-104-851-11	s	TANTALUM, CHIP 10uF 20% 10V
C662	1-104-851-11	s	TANTALUM, CHIP 10uF 20% 10V
C663	1-164-677-11	s	CERAMIC, CHIP 0.033uF 10% 16V
C664	1-164-677-11	s	CERAMIC, CHIP 0.033uF 10% 16V
C665	1-107-686-11	s	TANTALUM, CHIP 4.7uF 20% 16V
C666	1-107-686-11	s	TANTALUM, CHIP 4.7uF 20% 16V
C667	1-115-581-11	s	TANTALUM, CHIP 100uF 20% 16
C668	1-164-227-11	s	CERAMIC, CHIP 0.022uF 10% 25V
C669	1-115-581-11	s	TANTALUM, CHIP 100uF 20% 16
C670	1-165-176-11	s	CERAMIC, CHIP 0.047uF 10% 16V
C671	1-104-851-11	s	TANTALUM, CHIP 10uF 20% 10V
C672	1-104-851-11	s	TANTALUM, CHIP 10uF 20% 10V
C673	1-107-686-11	s	TANTALUM, CHIP 4.7uF 20% 16V
C674	1-115-581-11	s	TANTALUM, CHIP 100uF 20% 16
C675	1-115-581-11	s	TANTALUM, CHIP 100uF 20% 16
C677	1-128-391-11	s	ELECT 330uF 20% 6.3V
C678	1-164-227-11	s	CERAMIC, CHIP 0.022uF 10% 25V
C679	1-164-227-11	s	CERAMIC, CHIP 0.022uF 10% 25V
C680	1-164-227-11	s	CERAMIC, CHIP 0.022uF 10% 25V
C681	1-162-927-11	s	CERAMIC, CHIP 100PF 5% 50V
C682	1-162-927-11	s	CERAMIC, CHIP 100PF 5% 50V
C683	1-162-927-11	s	CERAMIC, CHIP 100PF 5% 50V
C684	1-162-927-11	s	CERAMIC, CHIP 100PF 5% 50V
C800	1-162-970-11	s	CERAMIC, CHIP 0.01uF 10% 25V
C801	1-107-826-91	s	CERAMIC 0.1uF 10% 16V
C802	1-104-913-11	s	TANTALUM, CHIP 10uF 20% 16V
C803	1-135-177-21	s	TANTALUM, CHIP 1uF 10% 25V

(TC-101 BOARD)

Ref. No. or Q'ty	Part No.	SP	Description
C804	1-164-227-11	s	CERAMIC, CHIP 0.022uF 10% 25V
C805	1-126-927-11	s	ELECT 2200uF 20% 10V
C806	1-107-826-91	s	CERAMIC 0.1uF 10% 16V
C807	1-107-826-91	s	CERAMIC 0.1uF 10% 16V
C808	1-107-826-91	s	CERAMIC 0.1uF 10% 16V
C809	1-104-913-11	s	TANTALUM, CHIP 10uF 20% 16V
C810	1-107-826-91	s	CERAMIC 0.1uF 10% 16V
C811	1-113-642-11	s	TANTALUM, CHIP 47uF 20% 10V
C812	1-107-826-91	s	CERAMIC 0.1uF 10% 16V
C813	1-104-913-11	s	TANTALUM, CHIP 10uF 20% 16V
C814	1-135-070-00	s	TANTALUM, CHIP 0.1uF 10% 35V
C815	1-104-913-11	s	TANTALUM, CHIP 10uF 20% 16V
C816	1-111-253-11	s	TANTALUM 100uF 20% 6.3V
C817	1-115-416-11	s	CERAMIC 1000PF 5% 25V
C818	1-164-227-11	s	CERAMIC, CHIP 0.022uF 10% 25V
C819	1-164-227-11	s	CERAMIC, CHIP 0.022uF 10% 25V
C820	1-113-642-11	s	TANTALUM, CHIP 47uF 20% 10V
C821	1-107-826-91	s	CERAMIC 0.1uF 10% 16V
C822	1-164-227-11	s	CERAMIC, CHIP 0.022uF 10% 25V
C823	1-164-227-11	s	CERAMIC, CHIP 0.022uF 10% 25V
C824	1-164-227-11	s	CERAMIC, CHIP 0.022uF 10% 25V
C825	1-162-919-11	s	CERAMIC, CHIP 22PF 5% 50V
C826	1-162-919-11	s	CERAMIC, CHIP 22PF 5% 50V
C827	1-107-826-91	s	CERAMIC 0.1uF 10% 16V
C828	1-135-177-21	s	TANTALUM, CHIP 1uF 10% 25V
C829	1-164-227-11	s	CERAMIC, CHIP 0.022uF 10% 25V
C830	1-104-913-11	s	TANTALUM, CHIP 10uF 20% 16V
C831	1-104-913-11	s	TANTALUM, CHIP 10uF 20% 16V
C832	1-135-177-21	s	TANTALUM, CHIP 1uF 10% 25V
C833	1-164-227-11	s	CERAMIC, CHIP 0.022uF 10% 25V
C834	1-164-227-11	s	CERAMIC, CHIP 0.022uF 10% 25V
C835	1-135-177-21	s	TANTALUM, CHIP 1uF 10% 25V
C836	1-164-227-11	s	CERAMIC, CHIP 0.022uF 10% 25V
C837	1-162-915-11	s	CERAMIC, CHIP 10PF 50V
C838	1-162-915-11	s	CERAMIC, CHIP 10PF 50V
C839	1-107-826-91	s	CERAMIC 0.1uF 10% 16V
C840	1-107-826-91	s	CERAMIC 0.1uF 10% 16V
C843	1-162-915-11	s	CERAMIC, CHIP 10PF 50V
C844	1-162-916-11	s	CERAMIC, CHIP 12PF 5% 50V
C845	1-164-227-11	s	CERAMIC, CHIP 0.022uF 10% 25V
C846	1-164-227-11	s	CERAMIC, CHIP 0.022uF 10% 25V
C847	1-164-227-11	s	CERAMIC, CHIP 0.022uF 10% 25V
C848	1-135-079-21	s	TANTALUM, CHIP 3.3uF 10% 35V
C849	1-164-227-11	s	CERAMIC, CHIP 0.022uF 10% 25V
C850	1-107-826-91	s	CERAMIC 0.1uF 10% 16V
C851	1-135-177-21	s	TANTALUM, CHIP 1uF 10% 25V
C852	1-164-227-11	s	CERAMIC, CHIP 0.022uF 10% 25V
C853	1-164-227-11	s	CERAMIC, CHIP 0.022uF 10% 25V
C854	1-104-913-11	s	TANTALUM, CHIP 10uF 20% 16V
C855	1-104-913-11	s	TANTALUM, CHIP 10uF 20% 16V
C856	1-162-920-11	s	CERAMIC, CHIP 27PF 5% 50V
C857	1-162-920-11	s	CERAMIC, CHIP 27PF 5% 50V
C858	1-164-227-11	s	CERAMIC, CHIP 0.022uF 10% 25V
C861	1-164-227-11	s	CERAMIC, CHIP 0.022uF 10% 25V
C862	1-164-227-11	s	CERAMIC, CHIP 0.022uF 10% 25V
C863	1-164-227-11	s	CERAMIC, CHIP 0.022uF 10% 25V
C864	1-164-227-11	s	CERAMIC, CHIP 0.022uF 10% 25V
C865	1-164-227-11	s	CERAMIC, CHIP 0.022uF 10% 25V
C866	1-164-227-11	s	CERAMIC, CHIP 0.022uF 10% 25V
C867	1-164-227-11	s	CERAMIC, CHIP 0.022uF 10% 25V

(TC-101 BOARD)

Ref. No. or Q'ty	Part No.	SP	Description
C868	1-107-826-91	s	CERAMIC 0.1uF 10% 16V
C869	1-164-227-11	s	CERAMIC, CHIP 0.022uF 10% 25V
C870*g'	1-162-970-11	s	CERAMIC, CHIP 0.01uF 10% 25V
C871*g'	1-162-970-11	s	CERAMIC, CHIP 0.01uF 10% 25V
CN5	1-573-768-21	o	PIN, CONNECTOR (1.5MM) (SMD)5P
CN6	1-764-177-11	o	PIN, CONNECTOR (SMD)(1.5MM) 7P
CN7	1-580-055-21	o	PIN, CONNECTOR (SMD) 2P
CN8	1-691-550-11	s	PIN, CONNECTOR (1.5MM)(SMD) 3P
CN10	1-691-551-11	o	PIN, CONNECTOR (SMD) 8P
CN121	1-569-531-11	s	HOUSING, 20P
CN122	1-569-532-11	s	HOUSING, 30P
CN123	1-569-532-11	s	HOUSING, 30P
CN150	1-695-223-21	s	PIN, CONNECTOR (SMD) 10P
CN503	1-580-057-11	o	PIN, CONNECTOR (SMD) 4P
D1	8-719-029-63	s	DIODE RD4.3UH-T1
D2	8-719-029-63	s	DIODE RD4.3UH-T1
D3	8-719-941-23	s	DIODE DA204U
D4	8-719-974-51	s	DIODE SB20-03P
D5	8-719-157-36	s	DIODE RD6.8M-B
D6	8-719-941-86	s	DIODE DAN202U
D7	8-719-941-86	s	DIODE DAN202U
D9	8-719-941-23	s	DIODE DA204U
D10	8-719-941-23	s	DIODE DA204U
D11	8-719-941-23	s	DIODE DA204U
D101	8-719-024-81	s	DIODE 1SS300-TE85L
D102	8-719-024-81	s	DIODE 1SS300-TE85L
D103	8-719-820-41	s	DIODE 1SS302
D104	8-719-820-41	s	DIODE 1SS302
D105	8-719-820-41	s	DIODE 1SS302
D106	8-719-820-41	s	DIODE 1SS302
D107	8-719-800-76	s	DIODE 1SS226
D108	8-719-800-76	s	DIODE 1SS226
D109	8-719-941-09	s	DIODE DAP202U
D110	8-719-941-09	s	DIODE DAP202U
D401	8-719-820-41	s	DIODE 1SS302
D402	8-719-820-41	s	DIODE 1SS302
D403	8-719-024-81	s	DIODE 1SS300-TE85L
D404	8-719-024-81	s	DIODE 1SS300-TE85L
D405	8-719-941-23	s	DIODE DA204U
D406	8-719-941-23	s	DIODE DA204U
D407	8-719-941-09	s	DIODE DAP202U
D408	8-719-941-09	s	DIODE DAP202U
D601	8-719-941-23	s	DIODE DA204U
D602	8-719-941-23	s	DIODE DA204U
D801	8-719-938-72	s	DIODE SB01-05CP
D802	8-719-941-86	s	DIODE DAN202U
D803	8-719-941-86	s	DIODE DAN202U
D804	8-719-941-86	s	DIODE DAN202U
D805	8-719-941-86	s	DIODE DAN202U
D806	8-719-941-23	s	DIODE DA204U
D807	8-719-941-23	s	DIODE DA204U
D808*h'	8-719-941-86	s	DIODE DAN202U
D809	8-719-105-28	s	DIODE RD2.4M-B
D810	8-719-105-28	s	DIODE RD2.4M-B
D811	8-719-941-86	s	DIODE DAN202U
D812*g'	8-719-041-79	s	DIODE MA721WA-TX
D812*i'	8-719-941-86	s	DIODE DAN202U
D813	8-719-941-86	s	DIODE DAN202U
D814	8-719-820-41	s	DIODE 1SS302

(TC-101 BOARD)

Ref. No. or Q'ty	Part No.	SP	Description
D815	8-719-938-72	s	DIODE SB01-05CP
D816	8-719-938-72	s	DIODE SB01-05CP
D817	8-719-941-86	s	DIODE DAN202U
D818	8-719-941-86	s	DIODE DAN202U
D819	8-719-820-41	s	DIODE 1SS302
D820	8-719-938-72	s	DIODE SB01-05CP
D821	8-719-938-72	s	DIODE SB01-05CP
D822	8-719-941-86	s	DIODE DAN202U
D823	8-719-032-78	s	DIODE GL3UR8
D824	8-719-989-22	s	DIODE CL-150R-CD-T
D825	8-719-989-22	s	DIODE CL-150R-CD-T
D830	8-719-941-23	s	DIODE DA204U
D831	8-719-941-23	s	DIODE DA204U
D832*g'	8-719-041-79	s	DIODE MA721WA-TX
IC1	8-759-710-88	s	IC NJM431U
IC2	8-759-710-88	s	IC NJM431U
IC3	8-759-710-78	s	IC NJM082BM
IC4	8-759-175-04	s	IC PCF8574T-T
IC5	8-759-189-47	s	IC MC34151DR2
IC10	8-759-196-96	s	IC TC7SH08FU-TE85R
IC100	8-759-700-84	s	IC NJM2041M-D
IC101	8-759-700-84	s	IC NJM2041M-D
IC102	8-759-700-84	s	IC NJM2041M-D
IC103	8-759-700-84	s	IC NJM2041M-D
IC104	8-759-700-84	s	IC NJM2041M-D
IC105	8-759-700-84	s	IC NJM2041M-D
IC106	8-759-700-84	s	IC NJM2041M-D
IC107	8-759-603-27	s	IC M5201FP
IC108	8-759-603-27	s	IC M5201FP
IC109	8-759-700-84	s	IC NJM2041M-D
IC110	8-759-700-84	s	IC NJM2041M-D
IC111	8-759-523-02	s	IC TC74HC4053AFT(EL)
IC112	8-759-908-16	s	IC TL072CPS
IC113	8-759-700-84	s	IC NJM2041M-D
IC114	8-759-700-84	s	IC NJM2041M-D
IC115	8-759-908-16	s	IC TL072CPS
IC116	8-759-908-16	s	IC TL072CPS
IC117	8-759-431-95	s	IC S-81230SGUP-DQB-T1
IC118	8-759-700-84	s	IC NJM2041M-D
IC119	8-759-700-84	s	IC NJM2041M-D
IC120	8-759-462-08	s	IC AK5352-VF-E2
IC122	8-759-523-95	s	IC TC74VHC74FT(EL)
IC123	8-759-196-96	s	IC TC7SH08FU-TE85R
IC401	8-759-927-46	s	IC SN74HC00ANS
IC402	8-759-700-84	s	IC NJM2041M-D
IC403	8-759-700-84	s	IC NJM2041M-D
IC404	8-759-700-84	s	IC NJM2041M-D
IC405	8-759-700-84	s	IC NJM2041M-D
IC406	8-759-359-66	s	IC TL082CPW-E05
IC407	8-759-359-66	s	IC TL082CPW-E05
IC408	8-759-700-84	s	IC NJM2041M-D
IC409	8-759-700-84	s	IC NJM2041M-D
IC410	8-759-462-08	s	IC AK5352-VF-E2
IC411	8-759-196-96	s	IC TC7SH08FU-TE85R
IC412	8-759-196-97	s	IC TC7SH32FU-TE85R
IC413	8-729-025-54	s	TRANSISTOR SI9958DY
IC601	8-759-051-48	s	IC SN74HCT541APW-E05
IC602	8-759-271-86	s	IC TC7SH04FU
IC603	8-759-531-50	s	IC PCM1716E-BT2

(TC-101 BOARD)

Ref. No. or Q'ty	Part No.	SP	Description
IC604	8-759-531-50	s	IC PCM1716E-BT2
IC605	8-759-271-86	s	IC TC7SH04FU
IC606	8-759-523-02	s	IC TC74HC4053AFT(EL)
IC607	8-759-700-84	s	IC NJM2041M-D
IC608	8-759-700-84	s	IC NJM2041M-D
IC609	8-759-700-84	s	IC NJM2041M-D
IC610	8-759-603-27	s	IC M5201FP
IC611	8-759-603-27	s	IC M5201FP
IC612	8-759-523-01	s	IC TC74HC4052AFT(EL)
IC613	8-759-603-27	s	IC M5201FP
IC614	8-759-603-27	s	IC M5201FP
IC615	8-759-523-01	s	IC TC74HC4052AFT(EL)
IC616	8-759-700-84	s	IC NJM2041M-D
IC617	8-759-700-84	s	IC NJM2041M-D
IC618	8-759-359-66	s	IC TL082CPW-E05
IC619	8-759-359-66	s	IC TL082CPW-E05
IC620	8-759-431-97	s	IC NJM386M(TE2)
IC621	8-759-700-84	s	IC NJM2041M-D
IC622	8-759-700-84	s	IC NJM2041M-D
IC630	8-759-525-10	s	IC TC7SET08F(TE85L)
IC800	8-759-082-61	s	IC TC4W53FU
IC802	8-759-461-86	s	IC RH5VL40AA-T1
IC803	8-759-431-94	s	IC S-81240SGUP-DQJ-T1
IC804	8-759-431-95	s	IC S-81230SGUP-DQB-T1
IC805	8-759-173-16	s	IC TL062CPW
IC806*j'	8-759-493-53	s	IC S-81233SGUP-DQF-T1
IC806*k'	8-759-431-95	s	IC S-81230SGUP-DQB-T1
IC807	8-759-710-28	s	IC NJM4565M-A
IC808	8-759-337-40	s	IC NJM2904V(TE2)
IC809	8-759-491-46	s	IC TC74VHCT04AFT(EL)
IC810	8-759-491-46	s	IC TC74VHCT04AFT(EL)
IC811	8-759-548-97	s	IC SN74LV04APWR
IC812	8-759-234-77	s	IC TC4S66F
IC813	8-759-557-12	s	IC IC S-875045CUP-ACA-T2
IC814	8-759-485-79	s	IC TC7SET08FU(TE85R)
IC815	8-759-523-95	s	IC TC74VHC74FT(EL)
IC816	8-759-196-96	s	IC TC7SH08FU-TE85R
IC817	8-759-490-41	s	IC TC74VHCT541AFT(EL)
IC818	8-759-490-41	s	IC TC74VHCT541AFT(EL)
IC819	8-759-485-79	s	IC TC7SET08FU(TE85R)
IC820	8-759-196-96	s	IC TC7SH08FU-TE85R
IC821	8-759-349-55	s	IC RH5VL25AA-T1
IC822	8-759-175-77	s	IC CXD8384Q
IC823	8-759-431-95	s	IC S-81230SGUP-DQB-T1
IC824	8-759-337-40	s	IC NJM2904V(TE2)
IC825	8-759-337-40	s	IC NJM2904V(TE2)
IC826	8-759-343-88	s	IC DS1302Z
IC827	8-759-071-01	s	IC UPD4991AGS
IC828	8-759-491-46	s	IC TC74VHCT04AFT(EL)
IC829	8-759-491-46	s	IC TC74VHCT04AFT(EL)
IC830	8-759-431-98	s	IC BR9020
IC831	8-752-381-56	s	IC CXD1095AR
IC832	8-752-381-56	s	IC CXD1095AR
IC833	8-759-491-46	s	IC TC74VHCT04AFT(EL)
IC834	8-759-081-96	s	IC UPD6456GS-620
IC835	8-759-485-79	s	IC TC7SET08FU(TE85R)
IC836	8-759-485-79	s	IC TC7SET08FU(TE85R)
IC837	8-759-196-96	s	IC TC7SH08FU-TE85R
IC838	8-759-271-86	s	IC TC7SH04FU
IC839	8-759-485-79	s	IC TC7SET08FU(TE85R)

(TC-101 BOARD)

Ref. No. or Q'ty	Part No.	SP	Description
IC840	8-759-485-79	s	IC TC7SET08FU(TE85R)
IC900	8-759-271-86	s	IC TC7SH04FU
IC901*g'	8-759-395-07	s	IC RH5VL20AA-T1
IS801	1-251-819-11	o	SOCKET, IC (QFP) 80P
IS802*m'	1-526-652-21	o	SOCKET, IC 8P
IS830*g'	1-526-652-21	o	SOCKET, IC 8P
L1	1-412-170-11	s	INDUCTOR 0.47uH
L2	1-412-170-11	s	INDUCTOR 0.47uH
L3	1-412-170-11	s	INDUCTOR 0.47uH
L4	1-412-170-11	s	INDUCTOR 0.47uH
L101	1-412-170-11	s	INDUCTOR 0.47uH
L601	1-408-798-00	s	INDUCTOR, CHIP 1mH
L801	1-410-389-31	s	INDUCTOR, CHIP 47uH
LCD801*m'	1-810-586-11	s	LCD MODULE
ND801*g'	1-810-586-11	s	LCD MODULE
PH101	1-808-252-11	s	PHOTOCOUPLER M-30
Q1	8-729-808-42	s	TRANSISTOR 2SD1624-T
Q2	8-729-020-94	s	TRANSISTOR 2SA1314C-TE12L
Q3	8-729-808-42	s	TRANSISTOR 2SD1624-T
Q4	8-729-140-63	s	TRANSISTOR 2SA1611-M5M6
Q5	8-729-028-91	s	TRANSISTOR DTA144EUA-T106
Q101*g'	8-729-402-84	s	TRANSISTOR XN4601
Q102*g'	8-729-402-84	s	TRANSISTOR XN4601
Q103	8-729-029-14	s	TRANSISTOR DTC144EUA-T106
Q104	8-729-029-14	s	TRANSISTOR DTC144EUA-T106
Q105	8-729-140-63	s	TRANSISTOR 2SA1611-M5M6
Q106	8-729-140-63	s	TRANSISTOR 2SA1611-M5M6
Q107	8-729-036-56	s	TRANSISTOR 2SK208-GR-TE85L
Q108	8-729-203-30	s	TRANSISTOR 2SJ106Y
Q109	8-729-036-56	s	TRANSISTOR 2SK208-GR-TE85L
Q110	8-729-203-30	s	TRANSISTOR 2SJ106Y
Q111	8-729-036-56	s	TRANSISTOR 2SK208-GR-TE85L
Q112	8-729-203-30	s	TRANSISTOR 2SJ106Y
Q113	8-729-036-56	s	TRANSISTOR 2SK208-GR-TE85L
Q114	8-729-203-30	s	TRANSISTOR 2SJ106Y
Q115	8-729-014-86	s	TRANSISTOR 2SC4207-YGRTE85L
Q116	8-729-014-86	s	TRANSISTOR 2SC4207-YGRTE85L
Q117	8-729-230-63	s	TRANSISTOR 2SC4116YG
Q118*g'	8-729-402-84	s	TRANSISTOR XN4601
Q119*g'	8-729-402-84	s	TRANSISTOR XN4601
Q120*g'	8-729-402-84	s	TRANSISTOR XN4601
Q121*g'	8-729-402-84	s	TRANSISTOR XN4601
Q122	8-729-230-63	s	TRANSISTOR 2SC4116YG
Q123	8-729-140-63	s	TRANSISTOR 2SA1611-M5M6
Q124	8-729-140-63	s	TRANSISTOR 2SA1611-M5M6
Q125	8-729-230-63	s	TRANSISTOR 2SC4116YG
Q126	8-729-230-63	s	TRANSISTOR 2SC4116YG
Q127	8-729-230-63	s	TRANSISTOR 2SC4116YG
Q128	8-729-230-63	s	TRANSISTOR 2SC4116YG
Q129	8-729-230-63	s	TRANSISTOR 2SC4116YG
Q130	8-729-230-63	s	TRANSISTOR 2SC4116YG
Q131	8-729-230-63	s	TRANSISTOR 2SC4116YG
Q132	8-729-230-63	s	TRANSISTOR 2SC4116YG
Q133	8-729-230-63	s	TRANSISTOR 2SC4116YG
Q134	8-729-230-63	s	TRANSISTOR 2SC4116YG
Q135	8-729-140-63	s	TRANSISTOR 2SA1611-M5M6

(TC-101 BOARD)

Ref. No. or Q'ty	Part No.	SP	Description
Q136	8-729-012-35	s	TRANSISTOR 2SK711-BL
Q137	8-729-012-35	s	TRANSISTOR 2SK711-BL
Q140*g'	8-729-402-84	s	TRANSISTOR XN4601
Q141*g'	8-729-402-84	s	TRANSISTOR XN4601
Q401	8-729-036-56	s	TRANSISTOR 2SK208-GR-TE85L
Q402	8-729-203-30	s	TRANSISTOR 2SJ106Y
Q403	8-729-036-56	s	TRANSISTOR 2SK208-GR-TE85L
Q404	8-729-203-30	s	TRANSISTOR 2SJ106Y
Q405	8-729-029-14	s	TRANSISTOR DTC144EUA-T106
Q406	8-729-029-14	s	TRANSISTOR DTC144EUA-T106
Q407	8-729-140-63	s	TRANSISTOR 2SA1611-M5M6
Q408	8-729-140-63	s	TRANSISTOR 2SA1611-M5M6
Q409	8-729-014-86	s	TRANSISTOR 2SC4207-YGRTE85L
Q410	8-729-014-86	s	TRANSISTOR 2SC4207-YGRTE85L
Q411	8-729-230-63	s	TRANSISTOR 2SC4116YG
Q412	8-729-230-63	s	TRANSISTOR 2SC4116YG
Q413	8-729-230-63	s	TRANSISTOR 2SC4116YG
Q414	8-729-230-63	s	TRANSISTOR 2SC4116YG
Q415	8-729-230-63	s	TRANSISTOR 2SC4116YG
Q416	8-729-230-63	s	TRANSISTOR 2SC4116YG
Q417*g'	8-729-402-84	s	TRANSISTOR XN4601
Q418*g'	8-729-402-84	s	TRANSISTOR XN4601
Q419*g'	8-729-402-84	s	TRANSISTOR XN4601
Q420*g'	8-729-402-84	s	TRANSISTOR XN4601
Q421	8-729-140-63	s	TRANSISTOR 2SA1611-M5M6
Q422	8-729-012-35	s	TRANSISTOR 2SK711-BL
Q423	8-729-012-35	s	TRANSISTOR 2SK711-BL
Q424	8-729-029-14	s	TRANSISTOR DTC144EUA-T106
Q425	8-729-028-91	s	TRANSISTOR DTA144EUA-T106
Q426	8-729-029-14	s	TRANSISTOR DTC144EUA-T106
Q601	8-729-014-86	s	TRANSISTOR 2SC4207-YGRTE85L
Q602	8-729-014-86	s	TRANSISTOR 2SC4207-YGRTE85L
Q603	8-729-209-07	s	TRANSISTOR 2SC4213-B
Q604	8-729-230-63	s	TRANSISTOR 2SC4116YG
Q605	8-729-230-63	s	TRANSISTOR 2SC4116YG
Q606	8-729-230-63	s	TRANSISTOR 2SC4116YG
Q607	8-729-230-63	s	TRANSISTOR 2SC4116YG
Q608	8-729-230-63	s	TRANSISTOR 2SC4116YG
Q609	8-729-230-63	s	TRANSISTOR 2SC4116YG
Q610*g'	8-729-402-84	s	TRANSISTOR XN4601
Q611*g'	8-729-402-84	s	TRANSISTOR XN4601
Q612*g'	8-729-402-84	s	TRANSISTOR XN4601
Q613*g'	8-729-402-84	s	TRANSISTOR XN4601
Q614*g'	8-729-402-84	s	TRANSISTOR XN4601
Q615*g'	8-729-402-84	s	TRANSISTOR XN4601
Q800	8-729-809-73	s	TRANSISTOR 2SK536-TB
Q801	8-729-809-73	s	TRANSISTOR 2SK536-TB
Q802	8-729-209-07	s	TRANSISTOR 2SC4213-B
Q803	8-729-029-14	s	TRANSISTOR DTC144EUA-T106
Q804*g'	8-729-041-24	s	TRANSISTOR NDS355AN
R1	1-218-704-11	s	METAL, CHIP 3.3K 0.50% 1/16W
R2	1-218-728-11	s	METAL, CHIP 33K 0.50% 1/16W
R3	1-218-728-11	s	METAL, CHIP 33K 0.50% 1/16W
R4	1-218-688-11	s	METAL, CHIP 680 0.50% 1/16W
R5	1-218-724-11	s	METAL, CHIP 22K 5% 1/16W
R6	1-218-702-11	s	METAL, CHIP 2.7K 0.50% 1/16W
R7	1-218-724-11	s	METAL, CHIP 22K 5% 1/16W
R8	1-218-732-11	s	METAL, CHIP 47K 0.50% 1/16W
R9	1-218-732-11	s	METAL, CHIP 47K 0.50% 1/16W
R10	1-216-864-11	s	METAL, CHIP 0 5% 1/16W

(TC-101 BOARD)

Ref. No. or Q'ty	Part No.	SP	Description
R11	1-216-864-11	s	METAL, CHIP 0 5% 1/16W
R12	1-216-864-11	s	METAL, CHIP 0 5% 1/16W
R13	1-218-668-11	s	METAL, CHIP 100 0.50% 1/16W
R14	1-216-864-11	s	METAL, CHIP 0 5% 1/16W
R15	1-218-700-11	s	METAL, CHIP 2.2K 0.50% 1/16W
R16	1-218-692-11	s	METAL, CHIP 1K 0.50% 1/16W
R17	1-218-692-11	s	METAL, CHIP 1K 0.50% 1/16W
R18	1-218-740-11	s	METAL, CHIP 100K 0.50% 1/16W
R19	1-218-716-11	s	METAL, CHIP 10K 0.50% 1/16W
R100	1-216-296-00	s	RESISTOR, CHIP 0 1/8W (3216)
R101	1-220-751-11	s	METAL 2.2K 0.10% 1/10W
R102	1-220-751-11	s	METAL 2.2K 0.10% 1/10W
R103	1-220-751-11	s	METAL 2.2K 0.10% 1/10W
R104	1-220-751-11	s	METAL 2.2K 0.10% 1/10W
R105	1-220-751-11	s	METAL 2.2K 0.10% 1/10W
R106	1-220-751-11	s	METAL 2.2K 0.10% 1/10W
R107	1-220-751-11	s	METAL 2.2K 0.10% 1/10W
R108	1-220-751-11	s	METAL 2.2K 0.10% 1/10W
R109	1-220-751-11	s	METAL 2.2K 0.10% 1/10W
R110	1-220-751-11	s	METAL 2.2K 0.10% 1/10W
R111	1-218-700-11	s	METAL, CHIP 2.2K 0.50% 1/16W
R112	1-218-700-11	s	METAL, CHIP 2.2K 0.50% 1/16W
R113	1-218-706-11	s	METAL, CHIP 3.9K 0.50% 1/16W
R114	1-218-851-11	s	METAL, CHIP 1.5K 0.50% 1/16W
R115	1-218-706-11	s	METAL, CHIP 3.9K 0.50% 1/16W
R116	1-218-851-11	s	METAL, CHIP 1.5K 0.50% 1/16W
R117	1-220-751-11	s	METAL 2.2K 0.10% 1/10W
R118	1-218-706-11	s	METAL, CHIP 3.9K 0.50% 1/16W
R119	1-218-708-11	s	METAL, CHIP 4.7K 0.50% 1/16W
R120	1-218-706-11	s	METAL, CHIP 3.9K 0.50% 1/16W
R121	1-220-751-11	s	METAL 2.2K 0.10% 1/10W
R122	1-218-700-11	s	METAL, CHIP 2.2K 0.50% 1/16W
R123	1-218-700-11	s	METAL, CHIP 2.2K 0.50% 1/16W
R124	1-218-708-11	s	METAL, CHIP 4.7K 0.50% 1/16W
R125	1-218-706-11	s	METAL, CHIP 3.9K 0.50% 1/16W
R126*g'	1-218-708-11	s	METAL, CHIP 4.7K 0.50% 1/16W
R127	1-218-851-11	s	METAL, CHIP 1.5K 0.50% 1/16W
R128	1-218-668-11	s	METAL, CHIP 100 0.50% 1/16W
R129*g'	1-218-708-11	s	METAL, CHIP 4.7K 0.50% 1/16W
R130*g'	1-218-708-11	s	METAL, CHIP 4.7K 0.50% 1/16W
R131	1-218-700-11	s	METAL, CHIP 2.2K 0.50% 1/16W
R132	1-218-700-11	s	METAL, CHIP 2.2K 0.50% 1/16W
R133	1-218-870-11	s	METAL, CHIP 9.1K 0.50% 1/16W
R134	1-218-707-11	s	METAL, CHIP 4.3K 0.50% 1/16W
R135	1-218-870-11	s	METAL, CHIP 9.1K 0.50% 1/16W
R136	1-218-707-11	s	METAL, CHIP 4.3K 0.50% 1/16W
R137	1-216-864-11	s	METAL, CHIP 0 5% 1/16W
R138	1-218-727-11	s	METAL, CHIP 30K 0.50% 1/16W
R139	1-216-864-11	s	METAL, CHIP 0 5% 1/16W
R140	1-218-727-11	s	METAL, CHIP 30K 0.50% 1/16W
R141	1-216-864-11	s	METAL, CHIP 0 5% 1/16W
R143	1-218-703-11	s	METAL, CHIP 3K 0.50% 1/16W
R145	1-218-703-11	s	METAL, CHIP 3K 0.50% 1/16W
R146	1-218-732-11	s	METAL, CHIP 47K 0.50% 1/16W
R147*g'	1-218-708-11	s	METAL, CHIP 4.7K 0.50% 1/16W
R148	1-218-732-11	s	METAL, CHIP 47K 0.50% 1/16W
R149	1-216-857-11	s	METAL, CHIP 1M 5% 1/16W
R150	1-216-857-11	s	METAL, CHIP 1M 5% 1/16W
R151	1-218-700-11	s	METAL, CHIP 2.2K 0.50% 1/16W
R152	1-218-700-11	s	METAL, CHIP 2.2K 0.50% 1/16W

(TC-101 BOARD)

Ref. No. or Q'ty	Part No.	SP	Description
R153	1-218-740-11	s	METAL, CHIP 100K 0.50% 1/16W
R154	1-218-724-11	s	METAL, CHIP 22K 5% 1/16W
R155	1-216-864-11	s	METAL, CHIP 0 5% 1/16W
R156	1-218-692-11	s	METAL, CHIP 1K 0.50% 1/16W
R157	1-218-716-11	s	METAL, CHIP 10K 0.50% 1/16W
R158	1-218-692-11	s	METAL, CHIP 1K 0.50% 1/16W
R159	1-216-864-11	s	METAL, CHIP 0 5% 1/16W
R160	1-216-864-11	s	METAL, CHIP 0 5% 1/16W
R161	1-218-716-11	s	METAL, CHIP 10K 0.50% 1/16W
R162	1-216-864-11	s	METAL, CHIP 0 5% 1/16W
R163	1-216-864-11	s	METAL, CHIP 0 5% 1/16W
R164	1-218-724-11	s	METAL, CHIP 22K 5% 1/16W
R165	1-218-708-11	s	METAL, CHIP 4.7K 0.50% 1/16W
R166	1-218-724-11	s	METAL, CHIP 22K 5% 1/16W
R167	1-218-708-11	s	METAL, CHIP 4.7K 0.50% 1/16W
R168	1-218-732-11	s	METAL, CHIP 47K 0.50% 1/16W
R169	1-218-740-11	s	METAL, CHIP 100K 0.50% 1/16W
R170	1-216-864-11	s	METAL, CHIP 0 5% 1/16W
R171	1-216-864-11	s	METAL, CHIP 0 5% 1/16W
R172	1-216-864-11	s	METAL, CHIP 0 5% 1/16W
R173	1-216-864-11	s	METAL, CHIP 0 5% 1/16W
R176	1-216-857-11	s	METAL, CHIP 1M 5% 1/16W
R177	1-216-857-11	s	METAL, CHIP 1M 5% 1/16W
R178	1-216-857-11	s	METAL, CHIP 1M 5% 1/16W
R179	1-216-857-11	s	METAL, CHIP 1M 5% 1/16W
R180	1-216-857-11	s	METAL, CHIP 1M 5% 1/16W
R181	1-216-857-11	s	METAL, CHIP 1M 5% 1/16W
R182	1-216-857-11	s	METAL, CHIP 1M 5% 1/16W
R183	1-216-857-11	s	METAL, CHIP 1M 5% 1/16W
R184	1-218-716-11	s	METAL, CHIP 10K 0.50% 1/16W
R185	1-218-716-11	s	METAL, CHIP 10K 0.50% 1/16W
R186	1-218-716-11	s	METAL, CHIP 10K 0.50% 1/16W
R187	1-218-716-11	s	METAL, CHIP 10K 0.50% 1/16W
R188	1-218-716-11	s	METAL, CHIP 10K 0.50% 1/16W
R189	1-218-716-11	s	METAL, CHIP 10K 0.50% 1/16W
R190	1-218-716-11	s	METAL, CHIP 10K 0.50% 1/16W
R191	1-218-716-11	s	METAL, CHIP 10K 0.50% 1/16W
R192	1-218-728-11	s	METAL, CHIP 33K 0.50% 1/16W
R193	1-218-728-11	s	METAL, CHIP 33K 0.50% 1/16W
R194	1-218-728-11	s	METAL, CHIP 33K 0.50% 1/16W
R195	1-218-728-11	s	METAL, CHIP 33K 0.50% 1/16W
R196	1-218-732-11	s	METAL, CHIP 47K 0.50% 1/16W
R197	1-218-732-11	s	METAL, CHIP 47K 0.50% 1/16W
R198	1-216-864-11	s	METAL, CHIP 0 5% 1/16W
R199	1-216-864-11	s	METAL, CHIP 0 5% 1/16W
R200	1-218-692-11	s	METAL, CHIP 1K 0.50% 1/16W
R201	1-216-864-11	s	METAL, CHIP 0 5% 1/16W
R202	1-218-692-11	s	METAL, CHIP 1K 0.50% 1/16W
R203	1-218-716-11	s	METAL, CHIP 10K 0.50% 1/16W
R204	1-218-716-11	s	METAL, CHIP 10K 0.50% 1/16W
R205	1-218-708-11	s	METAL, CHIP 4.7K 0.50% 1/16W
R206	1-218-708-11	s	METAL, CHIP 4.7K 0.50% 1/16W
R207	1-218-684-11	s	METAL, CHIP 470 0.50% 1/16W
R208*g'	1-218-684-11	s	METAL, CHIP 470 0.50% 1/16W
R208*i'	1-218-683-11	s	METAL, CHIP 430 0.50% 1/16W
R209	1-218-652-11	s	METAL, CHIP 22 0.50% 1/16W
R210	1-218-652-11	s	METAL, CHIP 22 0.50% 1/16W
R211	1-218-724-11	s	METAL, CHIP 22K 5% 1/16W
R212	1-218-713-11	s	METAL, CHIP 7.5K 0.50% 1/16W
R213	1-218-716-11	s	METAL, CHIP 10K 0.50% 1/16W

(TC-101 BOARD)

Ref. No. or Q'ty	Part No.	SP	Description
R214	1-218-713-11	s	METAL, CHIP 7.5K 0.50% 1/16W
R215	1-218-716-11	s	METAL, CHIP 10K 0.50% 1/16W
R216	1-218-722-11	s	METAL, CHIP 18K 0.50% 1/16W
R217	1-218-722-11	s	METAL, CHIP 18K 0.50% 1/16W
R218	1-218-684-11	s	METAL, CHIP 470 0.50% 1/16W
R219	1-218-716-11	s	METAL, CHIP 10K 0.50% 1/16W
R220	1-218-730-11	s	METAL, CHIP 39K 0.50% 1/16W
R221	1-218-684-11	s	METAL, CHIP 470 0.50% 1/16W
R222	1-218-716-11	s	METAL, CHIP 10K 0.50% 1/16W
R223	1-218-700-11	s	METAL, CHIP 2.2K 0.50% 1/16W
R224	1-218-700-11	s	METAL, CHIP 2.2K 0.50% 1/16W
R225	1-216-864-11	s	METAL, CHIP 0 5% 1/16W
R226	1-218-689-11	s	METAL, CHIP 750 0.50% 1/16W
R227	1-216-864-11	s	METAL, CHIP 0 5% 1/16W
R228	1-218-689-11	s	METAL, CHIP 750 0.50% 1/16W
R229	1-218-742-11	s	METAL, CHIP 120K 0.50% 1/16W
R230	1-218-750-11	s	METAL, CHIP 270K 0.50% 1/16W
R231*g'	1-218-708-11	s	METAL, CHIP 4.7K 0.50% 1/16W
R232*g'	1-218-708-11	s	METAL, CHIP 4.7K 0.50% 1/16W
R233	1-218-680-11	s	METAL, CHIP 330 0.50% 1/16W
R234	1-216-864-11	s	METAL, CHIP 0 5% 1/16W
R235	1-218-680-11	s	METAL, CHIP 330 0.50% 1/16W
R236	1-218-714-11	s	METAL, CHIP 8.2K 0.50% 1/16W
R237	1-218-703-11	s	METAL, CHIP 3K 0.50% 1/16W
R238	1-218-714-11	s	METAL, CHIP 8.2K 0.50% 1/16W
R239	1-218-703-11	s	METAL, CHIP 3K 0.50% 1/16W
R240	1-218-707-11	s	METAL, CHIP 4.3K 0.50% 1/16W
R241	1-218-707-11	s	METAL, CHIP 4.3K 0.50% 1/16W
R242	1-218-727-11	s	METAL, CHIP 30K 0.50% 1/16W
R243	1-218-727-11	s	METAL, CHIP 30K 0.50% 1/16W
R244	1-216-864-11	s	METAL, CHIP 0 5% 1/16W
R245*g'	1-218-692-11	s	METAL, CHIP 1K 0.50% 1/16W
R246*g'	1-218-692-11	s	METAL, CHIP 1K 0.50% 1/16W
R247*g'	1-218-708-11	s	METAL, CHIP 4.7K 0.50% 1/16W
R248*g'	1-218-708-11	s	METAL, CHIP 4.7K 0.50% 1/16W
R249*g'	1-218-732-11	s	METAL, CHIP 47K 0.50% 1/16W
R249*i'	1-218-703-11	s	METAL, CHIP 3K 0.50% 1/16W
R250*g'	1-218-732-11	s	METAL, CHIP 47K 0.50% 1/16W
R250*i'	1-218-703-11	s	METAL, CHIP 3K 0.50% 1/16W
R251	1-218-700-11	s	METAL, CHIP 2.2K 0.50% 1/16W
R252*m'	1-218-732-11	s	METAL, CHIP 47K 0.50% 1/16W
R252*g'	1-218-692-11	s	METAL, CHIP 1K 0.50% 1/16W
R253*m'	1-218-732-11	s	METAL, CHIP 47K 0.50% 1/16W
R253*g'	1-218-692-11	s	METAL, CHIP 1K 0.50% 1/16W
R254	1-218-700-11	s	METAL, CHIP 2.2K 0.50% 1/16W
R255	1-218-692-11	s	METAL, CHIP 1K 0.50% 1/16W
R256	1-218-692-11	s	METAL, CHIP 1K 0.50% 1/16W
R257	1-218-716-11	s	METAL, CHIP 10K 0.50% 1/16W
R258	1-218-716-11	s	METAL, CHIP 10K 0.50% 1/16W
R259*m'	1-218-851-11	s	METAL, CHIP 1.5K 0.50% 1/16W
R259*g'	1-218-692-11	s	METAL, CHIP 1K 0.50% 1/16W
R260*m'	1-218-851-11	s	METAL, CHIP 1.5K 0.50% 1/16W
R260*g'	1-218-692-11	s	METAL, CHIP 1K 0.50% 1/16W
R261*g'	1-218-732-11	s	METAL, CHIP 47K 0.50% 1/16W
R261*i'	1-218-692-11	s	METAL, CHIP 1K 0.50% 1/16W
R262	1-218-732-11	s	METAL, CHIP 47K 0.50% 1/16W
R263*g'	1-218-732-11	s	METAL, CHIP 47K 0.50% 1/16W
R263*i'	1-218-692-11	s	METAL, CHIP 1K 0.50% 1/16W
R264	1-218-732-11	s	METAL, CHIP 47K 0.50% 1/16W
R265*g'	1-218-732-11	s	METAL, CHIP 47K 0.50% 1/16W

(TC-101 BOARD)

Ref. No. or Q'ty	Part No.	SP	Description
R265*i'	1-218-711-11	s	METAL, CHIP 6.2K 0.50% 1/16W
R267*g'	1-218-732-11	s	METAL, CHIP 47K 0.50% 1/16W
R267*i'	1-218-711-11	s	METAL, CHIP 6.2K 0.50% 1/16W
R269*g'	1-218-692-11	s	METAL, CHIP 1K 0.50% 1/16W
R270*g'	1-218-692-11	s	METAL, CHIP 1K 0.50% 1/16W
R271	1-218-732-11	s	METAL, CHIP 47K 0.50% 1/16W
R272	1-218-732-11	s	METAL, CHIP 47K 0.50% 1/16W
R273	1-218-716-11	s	METAL, CHIP 10K 0.50% 1/16W
R274	1-218-700-11	s	METAL, CHIP 2.2K 0.50% 1/16W
R275	1-218-700-11	s	METAL, CHIP 2.2K 0.50% 1/16W
R276	1-218-716-11	s	METAL, CHIP 10K 0.50% 1/16W
R277	1-218-716-11	s	METAL, CHIP 10K 0.50% 1/16W
R278	1-218-689-11	s	METAL, CHIP 750 0.50% 1/16W
R279	1-218-716-11	s	METAL, CHIP 10K 0.50% 1/16W
R280	1-218-716-11	s	METAL, CHIP 10K 0.50% 1/16W
R281	1-218-706-11	s	METAL, CHIP 3.9K 0.50% 1/16W
R282	1-218-723-91	s	METAL, CHIP 20K 0.50% 1/16W
R283	1-218-708-11	s	METAL, CHIP 4.7K 0.50% 1/16W
R284	1-218-723-91	s	METAL, CHIP 20K 0.50% 1/16W
R285	1-218-708-11	s	METAL, CHIP 4.7K 0.50% 1/16W
R286	1-218-700-11	s	METAL, CHIP 2.2K 0.50% 1/16W
R287	1-218-700-11	s	METAL, CHIP 2.2K 0.50% 1/16W
R288	1-218-750-11	s	METAL, CHIP 270K 0.50% 1/16W
R289	1-218-723-91	s	METAL, CHIP 20K 0.50% 1/16W
R290	1-218-702-11	s	METAL, CHIP 2.7K 0.50% 1/16W
R291	1-218-716-11	s	METAL, CHIP 10K 0.50% 1/16W
R292	1-218-723-91	s	METAL, CHIP 20K 0.50% 1/16W
R293	1-218-702-11	s	METAL, CHIP 2.7K 0.50% 1/16W
R294	1-218-716-11	s	METAL, CHIP 10K 0.50% 1/16W
R295	1-218-716-11	s	METAL, CHIP 10K 0.50% 1/16W
R296	1-218-716-11	s	METAL, CHIP 10K 0.50% 1/16W
R297	1-218-724-11	s	METAL, CHIP 22K 5% 1/16W
R298	1-218-730-11	s	METAL, CHIP 39K 0.50% 1/16W
R299	1-218-716-11	s	METAL, CHIP 10K 0.50% 1/16W
R300	1-218-716-11	s	METAL, CHIP 10K 0.50% 1/16W
R301	1-218-748-11	s	METAL, CHIP 220K 0.50% 1/16W
R302	1-218-748-11	s	METAL, CHIP 220K 0.50% 1/16W
R303	1-218-742-11	s	METAL, CHIP 120K 0.50% 1/16W
R304	1-218-684-11	s	METAL, CHIP 470 0.50% 1/16W
R305	1-218-684-11	s	METAL, CHIP 470 0.50% 1/16W
R306	1-218-708-11	s	METAL, CHIP 4.7K 0.50% 1/16W
R307	1-218-708-11	s	METAL, CHIP 4.7K 0.50% 1/16W
R308	1-218-668-11	s	METAL, CHIP 100 0.50% 1/16W
R309	1-216-864-11	s	METAL, CHIP 0 5% 1/16W
R310	1-216-864-11	s	METAL, CHIP 0 5% 1/16W
R312	1-218-724-11	s	METAL, CHIP 22K 5% 1/16W
R314	1-218-724-11	s	METAL, CHIP 22K 5% 1/16W
R315	1-218-724-11	s	METAL, CHIP 22K 5% 1/16W
R316	1-218-716-11	s	METAL, CHIP 10K 0.50% 1/16W
R317	1-218-716-11	s	METAL, CHIP 10K 0.50% 1/16W
R318	1-218-716-11	s	METAL, CHIP 10K 0.50% 1/16W
R319	1-218-720-11	s	METAL, CHIP 15K 0.50% 1/16W
R320	1-218-692-11	s	METAL, CHIP 1K 0.50% 1/16W
R321	1-216-857-11	s	METAL, CHIP 1M 5% 1/16W
R322	1-218-704-11	s	METAL, CHIP 3.3K 0.50% 1/16W
R323	1-218-692-11	s	METAL, CHIP 1K 0.50% 1/16W
R324	1-216-857-11	s	METAL, CHIP 1M 5% 1/16W
R325	1-218-734-11	s	METAL, CHIP 56K 5% 1/16W
R326	1-218-704-11	s	METAL, CHIP 3.3K 0.50% 1/16W

(TC-101 BOARD)

Ref. No. or Q'ty	Part No.	SP	Description
R327	1-218-734-11	s	METAL, CHIP 56K 5% 1/16W
R328	1-218-734-11	s	METAL, CHIP 56K 5% 1/16W
R329	1-218-740-11	s	METAL, CHIP 100K 0.50% 1/16W
R330	1-218-734-11	s	METAL, CHIP 56K 5% 1/16W
R331	1-218-740-11	s	METAL, CHIP 100K 0.50% 1/16W
R332	1-218-704-11	s	METAL, CHIP 3.3K 0.50% 1/16W
R333	1-218-712-11	s	METAL, CHIP 6.8K 0.50% 1/16W
R334	1-218-704-11	s	METAL, CHIP 3.3K 0.50% 1/16W
R335	1-218-712-11	s	METAL, CHIP 6.8K 0.50% 1/16W
R336	1-218-729-11	s	METAL, CHIP 36K 0.50% 1/16W
R337	1-218-724-11	s	METAL, CHIP 22K 5% 1/16W
R338	1-218-729-11	s	METAL, CHIP 36K 0.50% 1/16W
R339	1-218-724-11	s	METAL, CHIP 22K 5% 1/16W
R340	1-218-732-11	s	METAL, CHIP 47K 0.50% 1/16W
R341	1-218-732-11	s	METAL, CHIP 47K 0.50% 1/16W
R342	1-218-732-11	s	METAL, CHIP 47K 0.50% 1/16W
R343	1-218-732-11	s	METAL, CHIP 47K 0.50% 1/16W
R344	1-218-666-11	s	METAL, CHIP 82 0.50% 1/16W
R345	1-218-666-11	s	METAL, CHIP 82 0.50% 1/16W
R346	1-218-666-11	s	METAL, CHIP 82 0.50% 1/16W
R347	1-218-666-11	s	METAL, CHIP 82 0.50% 1/16W
R348	1-216-864-11	s	METAL, CHIP 0 5% 1/16W
R349	1-218-740-11	s	METAL, CHIP 100K 0.50% 1/16W
R352	1-218-652-11	s	METAL, CHIP 22 0.50% 1/16W
R353	1-218-740-11	s	METAL, CHIP 100K 0.50% 1/16W
R354	1-218-740-11	s	METAL, CHIP 100K 0.50% 1/16W
R355	1-216-864-11	s	METAL, CHIP 0 5% 1/16W
R357	1-218-692-11	s	METAL, CHIP 1K 0.50% 1/16W
R358	1-218-692-11	s	METAL, CHIP 1K 0.50% 1/16W
R359	1-218-692-11	s	METAL, CHIP 1K 0.50% 1/16W
R360	1-218-692-11	s	METAL, CHIP 1K 0.50% 1/16W
R401	1-216-857-11	s	METAL, CHIP 1M 5% 1/16W
R402	1-216-857-11	s	METAL, CHIP 1M 5% 1/16W
R403	1-216-857-11	s	METAL, CHIP 1M 5% 1/16W
R404	1-216-857-11	s	METAL, CHIP 1M 5% 1/16W
R405	1-218-716-11	s	METAL, CHIP 10K 0.50% 1/16W
R406	1-218-716-11	s	METAL, CHIP 10K 0.50% 1/16W
R407	1-218-716-11	s	METAL, CHIP 10K 0.50% 1/16W
R408	1-218-716-11	s	METAL, CHIP 10K 0.50% 1/16W
R409	1-216-864-11	s	METAL, CHIP 0 5% 1/16W
R410	1-216-864-11	s	METAL, CHIP 0 5% 1/16W
R411	1-216-864-11	s	METAL, CHIP 0 5% 1/16W
R412	1-216-864-11	s	METAL, CHIP 0 5% 1/16W
R413	1-218-724-11	s	METAL, CHIP 22K 5% 1/16W
R414	1-218-724-11	s	METAL, CHIP 22K 5% 1/16W
R415	1-218-708-11	s	METAL, CHIP 4.7K 0.50% 1/16W
R416	1-218-708-11	s	METAL, CHIP 4.7K 0.50% 1/16W
R417	1-218-740-11	s	METAL, CHIP 100K 0.50% 1/16W
R418	1-218-740-11	s	METAL, CHIP 100K 0.50% 1/16W
R419	1-218-728-11	s	METAL, CHIP 33K 0.50% 1/16W
R420	1-218-728-11	s	METAL, CHIP 33K 0.50% 1/16W
R421	1-218-716-11	s	METAL, CHIP 10K 0.50% 1/16W
R422	1-218-708-11	s	METAL, CHIP 4.7K 0.50% 1/16W
R423	1-218-716-11	s	METAL, CHIP 10K 0.50% 1/16W
R424	1-218-708-11	s	METAL, CHIP 4.7K 0.50% 1/16W
R425	1-218-652-11	s	METAL, CHIP 22 0.50% 1/16W
R426	1-218-652-11	s	METAL, CHIP 22 0.50% 1/16W
R427	1-218-684-11	s	METAL, CHIP 470 0.50% 1/16W
R428	1-218-722-11	s	METAL, CHIP 18K 0.50% 1/16W
R429	1-218-722-11	s	METAL, CHIP 18K 0.50% 1/16W

(TC-101 BOARD)

Ref. No. or Q'ty	Part No.	SP	Description
R430	1-218-700-11	s	METAL, CHIP 2.2K 0.50% 1/16W
R431	1-216-864-11	s	METAL, CHIP 0 5% 1/16W
R432	1-218-689-11	s	METAL, CHIP 750 0.50% 1/16W
R433	1-218-684-11	s	METAL, CHIP 470 0.50% 1/16W
R434	1-218-700-11	s	METAL, CHIP 2.2K 0.50% 1/16W
R435	1-216-864-11	s	METAL, CHIP 0 5% 1/16W
R436	1-218-689-11	s	METAL, CHIP 750 0.50% 1/16W
R437	1-218-732-11	s	METAL, CHIP 47K 0.50% 1/16W
R438	1-218-732-11	s	METAL, CHIP 47K 0.50% 1/16W
R439	1-218-716-11	s	METAL, CHIP 10K 0.50% 1/16W
R440	1-218-716-11	s	METAL, CHIP 10K 0.50% 1/16W
R441	1-218-716-11	s	METAL, CHIP 10K 0.50% 1/16W
R442	1-218-716-11	s	METAL, CHIP 10K 0.50% 1/16W
R443	1-218-723-91	s	METAL, CHIP 20K 0.50% 1/16W
R444	1-218-708-11	s	METAL, CHIP 4.7K 0.50% 1/16W
R445	1-218-723-91	s	METAL, CHIP 20K 0.50% 1/16W
R446	1-218-708-11	s	METAL, CHIP 4.7K 0.50% 1/16W
R447	1-218-723-91	s	METAL, CHIP 20K 0.50% 1/16W
R448	1-218-723-91	s	METAL, CHIP 20K 0.50% 1/16W
R449	1-218-716-11	s	METAL, CHIP 10K 0.50% 1/16W
R450	1-218-716-11	s	METAL, CHIP 10K 0.50% 1/16W
R451	1-218-716-11	s	METAL, CHIP 10K 0.50% 1/16W
R452	1-218-716-11	s	METAL, CHIP 10K 0.50% 1/16W
R453	1-218-748-11	s	METAL, CHIP 220K 0.50% 1/16W
R454	1-218-748-11	s	METAL, CHIP 220K 0.50% 1/16W
R455	1-218-684-11	s	METAL, CHIP 470 0.50% 1/16W
R456	1-218-684-11	s	METAL, CHIP 470 0.50% 1/16W
R457	1-218-708-11	s	METAL, CHIP 4.7K 0.50% 1/16W
R458	1-218-708-11	s	METAL, CHIP 4.7K 0.50% 1/16W
R459	1-218-668-11	s	METAL, CHIP 100 0.50% 1/16W
R460	1-218-668-11	s	METAL, CHIP 100 0.50% 1/16W
R461*g'	1-218-708-11	s	METAL, CHIP 4.7K 0.50% 1/16W
R462*g'	1-218-708-11	s	METAL, CHIP 4.7K 0.50% 1/16W
R463	1-218-680-11	s	METAL, CHIP 330 0.50% 1/16W
R464	1-218-680-11	s	METAL, CHIP 330 0.50% 1/16W
R465	1-218-714-11	s	METAL, CHIP 8.2K 0.50% 1/16W
R466	1-218-703-11	s	METAL, CHIP 3K 0.50% 1/16W
R467	1-218-714-11	s	METAL, CHIP 8.2K 0.50% 1/16W
R468	1-218-703-11	s	METAL, CHIP 3K 0.50% 1/16W
R469	1-218-707-11	s	METAL, CHIP 4.3K 0.50% 1/16W
R470	1-218-707-11	s	METAL, CHIP 4.3K 0.50% 1/16W
R471	1-218-727-11	s	METAL, CHIP 30K 0.50% 1/16W
R472	1-218-727-11	s	METAL, CHIP 30K 0.50% 1/16W
R473	1-216-864-11	s	METAL, CHIP 0 5% 1/16W
R474	1-216-864-11	s	METAL, CHIP 0 5% 1/16W
R475*g'	1-218-692-11	s	METAL, CHIP 1K 0.50% 1/16W
R476*g'	1-218-692-11	s	METAL, CHIP 1K 0.50% 1/16W
R477*g'	1-218-708-11	s	METAL, CHIP 4.7K 0.50% 1/16W
R478*g'	1-218-708-11	s	METAL, CHIP 4.7K 0.50% 1/16W
R479*m'	1-218-703-11	s	METAL, CHIP 3K 0.50% 1/16W
R480*m'	1-218-703-11	s	METAL, CHIP 3K 0.50% 1/16W
R481*m'	1-218-732-11	s	METAL, CHIP 47K 0.50% 1/16W
R482*m'	1-218-732-11	s	METAL, CHIP 47K 0.50% 1/16W
R483	1-218-700-11	s	METAL, CHIP 2.2K 0.50% 1/16W
R484	1-218-700-11	s	METAL, CHIP 2.2K 0.50% 1/16W
R485*m'	1-218-851-11	s	METAL, CHIP 1.5K 0.50% 1/16W
R486*m'	1-218-851-11	s	METAL, CHIP 1.5K 0.50% 1/16W
R487*g'	1-218-732-11	s	METAL, CHIP 47K 0.50% 1/16W
R487*i'	1-218-692-11	s	METAL, CHIP 1K 0.50% 1/16W
R488*m'	1-218-732-11	s	METAL, CHIP 47K 0.50% 1/16W

(TC-101 BOARD)

Ref. No. or Q'ty	Part No.	SP	Description
R489*g'	1-218-732-11	s	METAL, CHIP 47K 0.50% 1/16W
R489*i'	1-218-692-11	s	METAL, CHIP 1K 0.50% 1/16W
R490*m'	1-218-732-11	s	METAL, CHIP 47K 0.50% 1/16W
R491*g'	1-218-732-11	s	METAL, CHIP 47K 0.50% 1/16W
R491*i'	1-218-711-11	s	METAL, CHIP 6.2K 0.50% 1/16W
R493*g'	1-218-732-11	s	METAL, CHIP 47K 0.50% 1/16W
R493*i'	1-218-711-11	s	METAL, CHIP 6.2K 0.50% 1/16W
R495*g'	1-218-692-11	s	METAL, CHIP 1K 0.50% 1/16W
R496*g'	1-218-692-11	s	METAL, CHIP 1K 0.50% 1/16W
R497	1-218-724-11	s	METAL, CHIP 22K 5% 1/16W
R498	1-218-724-11	s	METAL, CHIP 22K 5% 1/16W
R499	1-218-716-11	s	METAL, CHIP 10K 0.50% 1/16W
R500	1-218-720-11	s	METAL, CHIP 15K 0.50% 1/16W
R501	1-218-724-11	s	METAL, CHIP 22K 5% 1/16W
R502	1-218-716-11	s	METAL, CHIP 10K 0.50% 1/16W
R503	1-218-716-11	s	METAL, CHIP 10K 0.50% 1/16W
R504	1-218-692-11	s	METAL, CHIP 1K 0.50% 1/16W
R505	1-218-692-11	s	METAL, CHIP 1K 0.50% 1/16W
R506	1-216-857-11	s	METAL, CHIP 1M 5% 1/16W
R507	1-216-857-11	s	METAL, CHIP 1M 5% 1/16W
R508	1-218-704-11	s	METAL, CHIP 3.3K 0.50% 1/16W
R509	1-218-704-11	s	METAL, CHIP 3.3K 0.50% 1/16W
R510	1-218-734-11	s	METAL, CHIP 56K 5% 1/16W
R511	1-218-734-11	s	METAL, CHIP 56K 5% 1/16W
R512	1-218-734-11	s	METAL, CHIP 56K 5% 1/16W
R513	1-218-740-11	s	METAL, CHIP 100K 0.50% 1/16W
R514	1-218-734-11	s	METAL, CHIP 56K 5% 1/16W
R515	1-218-740-11	s	METAL, CHIP 100K 0.50% 1/16W
R516	1-218-704-11	s	METAL, CHIP 3.3K 0.50% 1/16W
R517	1-218-712-11	s	METAL, CHIP 6.8K 0.50% 1/16W
R518	1-218-704-11	s	METAL, CHIP 3.3K 0.50% 1/16W
R519	1-218-712-11	s	METAL, CHIP 6.8K 0.50% 1/16W
R520	1-218-729-11	s	METAL, CHIP 36K 0.50% 1/16W
R521	1-218-724-11	s	METAL, CHIP 22K 5% 1/16W
R522	1-218-729-11	s	METAL, CHIP 36K 0.50% 1/16W
R523	1-218-724-11	s	METAL, CHIP 22K 5% 1/16W
R524	1-218-732-11	s	METAL, CHIP 47K 0.50% 1/16W
R525	1-218-732-11	s	METAL, CHIP 47K 0.50% 1/16W
R526	1-218-732-11	s	METAL, CHIP 47K 0.50% 1/16W
R527	1-218-732-11	s	METAL, CHIP 47K 0.50% 1/16W
R528	1-218-666-11	s	METAL, CHIP 82 0.50% 1/16W
R529	1-218-666-11	s	METAL, CHIP 82 0.50% 1/16W
R530	1-218-666-11	s	METAL, CHIP 82 0.50% 1/16W
R531	1-218-666-11	s	METAL, CHIP 82 0.50% 1/16W
R532	1-216-864-11	s	METAL, CHIP 0 5% 1/16W
R534	1-216-864-11	s	METAL, CHIP 0 5% 1/16W
R535	1-218-652-11	s	METAL, CHIP 22 0.50% 1/16W
R536	1-218-740-11	s	METAL, CHIP 100K 0.50% 1/16W
R537	1-218-740-11	s	METAL, CHIP 100K 0.50% 1/16W
R538	1-216-864-11	s	METAL, CHIP 0 5% 1/16W
R539	1-218-740-11	s	METAL, CHIP 100K 0.50% 1/16W
R540	1-218-740-11	s	METAL, CHIP 100K 0.50% 1/16W
R541	1-218-716-11	s	METAL, CHIP 10K 0.50% 1/16W
R542	1-218-716-11	s	METAL, CHIP 10K 0.50% 1/16W
R601	1-218-668-11	s	METAL, CHIP 100 0.50% 1/16W
R602	1-216-864-11	s	METAL, CHIP 0 5% 1/16W
R603	1-218-668-11	s	METAL, CHIP 100 0.50% 1/16W
R604	1-218-668-11	s	METAL, CHIP 100 0.50% 1/16W
R605	1-218-668-11	s	METAL, CHIP 100 0.50% 1/16W
R606	1-218-668-11	s	METAL, CHIP 100 0.50% 1/16W

(TC-101 BOARD)

Ref. No. or Q'ty	Part No.	SP	Description
R608	1-218-668-11	s	METAL, CHIP 100 0.50% 1/16W
R609	1-218-668-11	s	METAL, CHIP 100 0.50% 1/16W
R610	1-218-668-11	s	METAL, CHIP 100 0.50% 1/16W
R611	1-218-668-11	s	METAL, CHIP 100 0.50% 1/16W
R612	1-218-740-11	s	METAL, CHIP 100K 0.50% 1/16W
R613	1-218-740-11	s	METAL, CHIP 100K 0.50% 1/16W
R614	1-218-648-11	s	METAL, CHIP 15 0.50% 1/16W
R615	1-218-648-11	s	METAL, CHIP 15 0.50% 1/16W
R618	1-218-644-11	s	METAL, CHIP 10 0.50% 1/16W
R619	1-218-644-11	s	METAL, CHIP 10 0.50% 1/16W
R620	1-218-668-11	s	METAL, CHIP 100 0.50% 1/16W
R621	1-218-668-11	s	METAL, CHIP 100 0.50% 1/16W
R622	1-218-668-11	s	METAL, CHIP 100 0.50% 1/16W
R623	1-218-668-11	s	METAL, CHIP 100 0.50% 1/16W
R625	1-218-740-11	s	METAL, CHIP 100K 0.50% 1/16W
R636	1-216-864-11	s	METAL, CHIP 0 5% 1/16W
R637	1-218-707-11	s	METAL, CHIP 4.3K 0.50% 1/16W
R638	1-218-707-11	s	METAL, CHIP 4.3K 0.50% 1/16W
R639	1-216-864-11	s	METAL, CHIP 0 5% 1/16W
R644	1-218-881-11	s	METAL, CHIP 27K 0.50% 1/16W
R645	1-218-881-11	s	METAL, CHIP 27K 0.50% 1/16W
R646	1-218-711-11	s	METAL, CHIP 6.2K 0.50% 1/16W
R647	1-218-711-11	s	METAL, CHIP 6.2K 0.50% 1/16W
R648	1-218-700-11	s	METAL, CHIP 2.2K 0.50% 1/16W
R649	1-218-700-11	s	METAL, CHIP 2.2K 0.50% 1/16W
R650	1-218-707-11	s	METAL, CHIP 4.3K 0.50% 1/16W
R651	1-218-707-11	s	METAL, CHIP 4.3K 0.50% 1/16W
R652	1-218-851-11	s	METAL, CHIP 1.5K 0.50% 1/16W
R653	1-218-851-11	s	METAL, CHIP 1.5K 0.50% 1/16W
R654	1-218-732-11	s	METAL, CHIP 47K 0.50% 1/16W
R655	1-218-851-11	s	METAL, CHIP 1.5K 0.50% 1/16W
R657	1-218-851-11	s	METAL, CHIP 1.5K 0.50% 1/16W
R658*m'	1-216-864-11	s	METAL, CHIP 0 5% 1/16W
R659*m'	1-216-864-11	s	METAL, CHIP 0 5% 1/16W
R660	1-218-881-11	s	METAL, CHIP 27K 0.50% 1/16W
R661	1-218-881-11	s	METAL, CHIP 27K 0.50% 1/16W
R662	1-218-676-11	s	METAL, CHIP 220 0.50% 1/16W
R663	1-218-676-11	s	METAL, CHIP 220 0.50% 1/16W
R664	1-218-851-11	s	METAL, CHIP 1.5K 0.50% 1/16W
R665	1-218-851-11	s	METAL, CHIP 1.5K 0.50% 1/16W
R666	1-218-712-11	s	METAL, CHIP 6.8K 0.50% 1/16W
R667	1-218-712-11	s	METAL, CHIP 6.8K 0.50% 1/16W
R668	1-218-703-11	s	METAL, CHIP 3K 0.50% 1/16W
R669	1-218-703-11	s	METAL, CHIP 3K 0.50% 1/16W
R670	1-218-700-11	s	METAL, CHIP 2.2K 0.50% 1/16W
R671	1-218-700-11	s	METAL, CHIP 2.2K 0.50% 1/16W
R672	1-218-703-11	s	METAL, CHIP 3K 0.50% 1/16W
R673	1-218-700-11	s	METAL, CHIP 2.2K 0.50% 1/16W
R675	1-218-684-11	s	METAL, CHIP 470 0.50% 1/16W
R676	1-218-684-11	s	METAL, CHIP 470 0.50% 1/16W
R677	1-218-700-11	s	METAL, CHIP 2.2K 0.50% 1/16W
R678	1-218-700-11	s	METAL, CHIP 2.2K 0.50% 1/16W
R679	1-218-716-11	s	METAL, CHIP 10K 0.50% 1/16W
R680*m'	1-218-716-11	s	METAL, CHIP 10K 0.50% 1/16W
R681	1-218-732-11	s	METAL, CHIP 47K 0.50% 1/16W
R682	1-218-716-11	s	METAL, CHIP 10K 0.50% 1/16W
R683	1-216-864-11	s	METAL, CHIP 0 5% 1/16W
R685	1-218-705-11	s	METAL, CHIP 3.6K 0.50% 1/16W
R687	1-218-705-11	s	METAL, CHIP 3.6K 0.50% 1/16W

(TC-101 BOARD)

Ref. No. or Q'ty	Part No.	SP	Description
R689	1-218-713-11	s	METAL, CHIP 7.5K 0.50% 1/16W
R690	1-218-680-11	s	METAL, CHIP 330 0.50% 1/16W
R691	1-218-692-11	s	METAL, CHIP 1K 0.50% 1/16W
R692	1-218-692-11	s	METAL, CHIP 1K 0.50% 1/16W
R693	1-216-864-11	s	METAL, CHIP 0 5% 1/16W
R694	1-218-740-11	s	METAL, CHIP 100K 0.50% 1/16W
R695	1-218-713-11	s	METAL, CHIP 7.5K 0.50% 1/16W
R696	1-218-713-11	s	METAL, CHIP 7.5K 0.50% 1/16W
R697	1-218-716-11	s	METAL, CHIP 10K 0.50% 1/16W
R698	1-218-713-11	s	METAL, CHIP 7.5K 0.50% 1/16W
R699	1-218-680-11	s	METAL, CHIP 330 0.50% 1/16W
R700	1-218-732-11	s	METAL, CHIP 47K 0.50% 1/16W
R701	1-218-740-11	s	METAL, CHIP 100K 0.50% 1/16W
R702	1-218-740-11	s	METAL, CHIP 100K 0.50% 1/16W
R703	1-218-680-11	s	METAL, CHIP 330 0.50% 1/16W
R704	1-216-864-11	s	METAL, CHIP 0 5% 1/16W
R705	1-218-698-11	s	METAL, CHIP 1.8K 0.50% 1/16W
R707	1-218-698-11	s	METAL, CHIP 1.8K 0.50% 1/16W
R709	1-218-732-11	s	METAL, CHIP 47K 0.50% 1/16W
R710	1-218-716-11	s	METAL, CHIP 10K 0.50% 1/16W
R711	1-218-716-11	s	METAL, CHIP 10K 0.50% 1/16W
R712	1-218-700-11	s	METAL, CHIP 2.2K 0.50% 1/16W
R713	1-218-700-11	s	METAL, CHIP 2.2K 0.50% 1/16W
R714	1-218-644-11	s	METAL, CHIP 10 0.50% 1/16W
R715	1-218-644-11	s	METAL, CHIP 10 0.50% 1/16W
R716	1-218-683-11	s	METAL, CHIP 430 0.50% 1/16W
R717	1-218-683-11	s	METAL, CHIP 430 0.50% 1/16W
R718	1-218-722-11	s	METAL, CHIP 18K 0.50% 1/16W
R719	1-218-722-11	s	METAL, CHIP 18K 0.50% 1/16W
R720	1-218-677-11	s	METAL, CHIP 240 0.50% 1/16W
R721	1-218-677-11	s	METAL, CHIP 240 0.50% 1/16W
R722	1-218-703-11	s	METAL, CHIP 3K 0.50% 1/16W
R723	1-218-703-11	s	METAL, CHIP 3K 0.50% 1/16W
R724	1-218-708-11	s	METAL, CHIP 4.7K 0.50% 1/16W
R725	1-218-708-11	s	METAL, CHIP 4.7K 0.50% 1/16W
R726	1-218-851-11	s	METAL, CHIP 1.5K 0.50% 1/16W
R727	1-218-716-11	s	METAL, CHIP 10K 0.50% 1/16W
R728	1-218-740-11	s	METAL, CHIP 100K 0.50% 1/16W
R729	1-218-746-11	s	METAL, CHIP 180K 0.50% 1/16W
R730	1-218-700-11	s	METAL, CHIP 2.2K 0.50% 1/16W
R731	1-218-732-11	s	METAL, CHIP 47K 0.50% 1/16W
R732	1-218-732-11	s	METAL, CHIP 47K 0.50% 1/16W
R733	1-218-692-11	s	METAL, CHIP 1K 0.50% 1/16W
R734	1-218-716-11	s	METAL, CHIP 10K 0.50% 1/16W
R735	1-218-716-11	s	METAL, CHIP 10K 0.50% 1/16W
R736	1-218-716-11	s	METAL, CHIP 10K 0.50% 1/16W
R737	1-218-716-11	s	METAL, CHIP 10K 0.50% 1/16W
R738	1-218-723-91	s	METAL, CHIP 20K 0.50% 1/16W
R739	1-218-723-91	s	METAL, CHIP 20K 0.50% 1/16W
R740	1-218-700-11	s	METAL, CHIP 2.2K 0.50% 1/16W
R741	1-218-700-11	s	METAL, CHIP 2.2K 0.50% 1/16W
R742	1-218-723-91	s	METAL, CHIP 20K 0.50% 1/16W
R743	1-218-723-91	s	METAL, CHIP 20K 0.50% 1/16W
R744	1-218-702-11	s	METAL, CHIP 2.7K 0.50% 1/16W
R745	1-218-702-11	s	METAL, CHIP 2.7K 0.50% 1/16W
R746	1-218-692-11	s	METAL, CHIP 1K 0.50% 1/16W
R747	1-218-716-11	s	METAL, CHIP 10K 0.50% 1/16W
R748	1-218-716-11	s	METAL, CHIP 10K 0.50% 1/16W
R749	1-218-748-11	s	METAL, CHIP 220K 0.50% 1/16W
R750	1-218-748-11	s	METAL, CHIP 220K 0.50% 1/16W

(TC-101 BOARD)

Ref. No. or Q'ty	Part No.	SP	Description
R751	1-218-716-11	s	METAL, CHIP 10K 0.50% 1/16W
R753	1-218-668-11	s	METAL, CHIP 100 0.50% 1/16W
R754	1-218-668-11	s	METAL, CHIP 100 0.50% 1/16W
R755	1-218-700-11	s	METAL, CHIP 2.2K 0.50% 1/16W
R756*g'	1-218-708-11	s	METAL, CHIP 4.7K 0.50% 1/16W
R757*g'	1-218-708-11	s	METAL, CHIP 4.7K 0.50% 1/16W
R758	1-218-700-11	s	METAL, CHIP 2.2K 0.50% 1/16W
R759	1-218-708-11	s	METAL, CHIP 4.7K 0.50% 1/16W
R760	1-218-687-11	s	METAL, CHIP 620 0.50% 1/16W
R761*g'	1-218-732-11	s	METAL, CHIP 47K 0.50% 1/16W
R761*i'	1-218-722-11	s	METAL, CHIP 18K 0.50% 1/16W
R762	1-218-708-11	s	METAL, CHIP 4.7K 0.50% 1/16W
R763	1-218-687-11	s	METAL, CHIP 620 0.50% 1/16W
R764*g'	1-218-692-11	s	METAL, CHIP 1K 0.50% 1/16W
R765*g'	1-218-732-11	s	METAL, CHIP 47K 0.50% 1/16W
R765*i'	1-218-722-11	s	METAL, CHIP 18K 0.50% 1/16W
R766*g'	1-218-692-11	s	METAL, CHIP 1K 0.50% 1/16W
R769	1-218-644-11	s	METAL, CHIP 10 0.50% 1/16W
R770	1-218-710-91	s	METAL 5.6K 0.50% 1/16W
R771	1-218-710-91	s	METAL 5.6K 0.50% 1/16W
R772*g'	1-218-708-11	s	METAL, CHIP 4.7K 0.50% 1/16W
R772*i'	1-216-864-11	s	METAL, CHIP 0 5% 1/16W
R773	1-218-732-11	s	METAL, CHIP 47K 0.50% 1/16W
R774	1-218-692-11	s	METAL, CHIP 1K 0.50% 1/16W
R775*g'	1-218-708-11	s	METAL, CHIP 4.7K 0.50% 1/16W
R775*i'	1-216-864-11	s	METAL, CHIP 0 5% 1/16W
R776	1-218-732-11	s	METAL, CHIP 47K 0.50% 1/16W
R777	1-218-692-11	s	METAL, CHIP 1K 0.50% 1/16W
R778*m'	1-218-698-11	s	METAL, CHIP 1.8K 0.50% 1/16W
R779*m'	1-218-728-11	s	METAL, CHIP 33K 0.50% 1/16W
R780*m'	1-218-698-11	s	METAL, CHIP 1.8K 0.50% 1/16W
R781*g'	1-218-716-11	s	METAL, CHIP 10K 0.50% 1/16W
R781*i'	1-218-728-11	s	METAL, CHIP 33K 0.50% 1/16W
R782	1-218-700-11	s	METAL, CHIP 2.2K 0.50% 1/16W
R783*g'	1-218-692-11	s	METAL, CHIP 1K 0.50% 1/16W
R784	1-218-700-11	s	METAL, CHIP 2.2K 0.50% 1/16W
R785*g'	1-218-716-11	s	METAL, CHIP 10K 0.50% 1/16W
R786	1-218-692-11	s	METAL, CHIP 1K 0.50% 1/16W
R787	1-218-692-11	s	METAL, CHIP 1K 0.50% 1/16W
R788	1-218-692-11	s	METAL, CHIP 1K 0.50% 1/16W
R790*g'	1-218-732-11	s	METAL, CHIP 47K 0.50% 1/16W
R790*i'	1-218-716-11	s	METAL, CHIP 10K 0.50% 1/16W
R791*m'	1-218-716-11	s	METAL, CHIP 10K 0.50% 1/16W
R792*g'	1-218-732-11	s	METAL, CHIP 47K 0.50% 1/16W
R793*g'	1-218-692-11	s	METAL, CHIP 1K 0.50% 1/16W
R794*g'	1-218-708-11	s	METAL, CHIP 4.7K 0.50% 1/16W
R795*g'	1-218-708-11	s	METAL, CHIP 4.7K 0.50% 1/16W
R796*g'	1-218-732-11	s	METAL, CHIP 47K 0.50% 1/16W
R797*g'	1-218-692-11	s	METAL, CHIP 1K 0.50% 1/16W
R798*g'	1-218-692-11	s	METAL, CHIP 1K 0.50% 1/16W
R799*g'	1-218-728-11	s	METAL, CHIP 33K 0.50% 1/16W
R800	1-218-740-11	s	METAL, CHIP 100K 0.50% 1/16W
R801	1-218-740-11	s	METAL, CHIP 100K 0.50% 1/16W
R802	1-218-716-11	s	METAL, CHIP 10K 0.50% 1/16W
R803	1-218-665-11	s	METAL, CHIP 75 0.50% 1/16W
R804	1-218-728-11	s	METAL, CHIP 33K 0.50% 1/16W
R805	1-216-864-11	s	METAL, CHIP 0 5% 1/16W
R806	1-218-732-11	s	METAL, CHIP 47K 0.50% 1/16W
R807	1-218-740-11	s	METAL, CHIP 100K 0.50% 1/16W
R808	1-218-740-11	s	METAL, CHIP 100K 0.50% 1/16W
R809	1-218-851-11	s	METAL, CHIP 1.5K 0.50% 1/16W

(TC-101 BOARD)

Ref. No. or Q'ty	Part No.	SP	Description
R810	1-218-748-11	s	METAL, CHIP 220K 0.50% 1/16W
R811	1-218-748-11	s	METAL, CHIP 220K 0.50% 1/16W
R812	1-218-748-11	s	METAL, CHIP 220K 0.50% 1/16W
R813	1-218-748-11	s	METAL, CHIP 220K 0.50% 1/16W
R814	1-218-748-11	s	METAL, CHIP 220K 0.50% 1/16W
R815	1-218-724-11	s	METAL, CHIP 22K 5% 1/16W
R816	1-218-718-11	s	METAL, CHIP 12K 0.50% 1/16W
R817	1-218-740-11	s	METAL, CHIP 100K 0.50% 1/16W
R818	1-218-732-11	s	METAL, CHIP 47K 0.50% 1/16W
R819	1-218-703-11	s	METAL, CHIP 3K 0.50% 1/16W
R820	1-218-716-11	s	METAL, CHIP 10K 0.50% 1/16W
R821	1-218-716-11	s	METAL, CHIP 10K 0.50% 1/16W
R822	1-218-748-11	s	METAL, CHIP 220K 0.50% 1/16W
R823	1-218-716-11	s	METAL, CHIP 10K 0.50% 1/16W
R824	1-218-716-11	s	METAL, CHIP 10K 0.50% 1/16W
R825	1-218-716-11	s	METAL, CHIP 10K 0.50% 1/16W
R826	1-218-716-11	s	METAL, CHIP 10K 0.50% 1/16W
R827	1-218-692-11	s	METAL, CHIP 1K 0.50% 1/16W
R828	1-218-748-11	s	METAL, CHIP 220K 0.50% 1/16W
R829	1-216-857-11	s	METAL, CHIP 1M 5% 1/16W
R830	1-218-668-11	s	METAL, CHIP 100 0.50% 1/16W
R831	1-218-736-11	s	METAL, CHIP 68K 0.50% 1/16W
R832	1-218-748-11	s	METAL, CHIP 220K 0.50% 1/16W
R833	1-218-752-11	s	METAL, CHIP 330K 0.50% 1/16W
R834	1-218-734-11	s	METAL, CHIP 56K 5% 1/16W
R835	1-216-864-11	s	METAL, CHIP 0 5% 1/16W
R836	1-218-724-11	s	METAL, CHIP 22K 5% 1/16W
R837	1-218-740-11	s	METAL, CHIP 100K 0.50% 1/16W
R838	1-218-748-11	s	METAL, CHIP 220K 0.50% 1/16W
R839	1-218-748-11	s	METAL, CHIP 220K 0.50% 1/16W
R840	1-218-716-11	s	METAL, CHIP 10K 0.50% 1/16W
R841	1-218-716-11	s	METAL, CHIP 10K 0.50% 1/16W
R842	1-218-740-11	s	METAL, CHIP 100K 0.50% 1/16W
R843	1-218-740-11	s	METAL, CHIP 100K 0.50% 1/16W
R844	1-218-748-11	s	METAL, CHIP 220K 0.50% 1/16W
R845	1-218-748-11	s	METAL, CHIP 220K 0.50% 1/16W
R846	1-218-686-11	s	METAL, CHIP 560 0.50% 1/16W
R847	1-216-861-11	s	METAL, CHIP 2.2M 5% 1/16W
R848	1-218-700-11	s	METAL, CHIP 2.2K 0.50% 1/16W
R849	1-218-700-11	s	METAL, CHIP 2.2K 0.50% 1/16W
R850	1-218-748-11	s	METAL, CHIP 220K 0.50% 1/16W
R851	1-218-700-11	s	METAL, CHIP 2.2K 0.50% 1/16W
R852	1-218-700-11	s	METAL, CHIP 2.2K 0.50% 1/16W
R853	1-218-700-11	s	METAL, CHIP 2.2K 0.50% 1/16W
R854	1-218-700-11	s	METAL, CHIP 2.2K 0.50% 1/16W
R855	1-218-748-11	s	METAL, CHIP 220K 0.50% 1/16W
R856	1-218-748-11	s	METAL, CHIP 220K 0.50% 1/16W
R857	1-218-748-11	s	METAL, CHIP 220K 0.50% 1/16W
R858	1-218-748-11	s	METAL, CHIP 220K 0.50% 1/16W
R859	1-218-748-11	s	METAL, CHIP 220K 0.50% 1/16W
R860	1-218-716-11	s	METAL, CHIP 10K 0.50% 1/16W
R861	1-218-748-11	s	METAL, CHIP 220K 0.50% 1/16W
R862	1-218-748-11	s	METAL, CHIP 220K 0.50% 1/16W
R863	1-218-748-11	s	METAL, CHIP 220K 0.50% 1/16W
R864	1-218-692-11	s	METAL, CHIP 1K 0.50% 1/16W
R865	1-218-713-11	s	METAL, CHIP 7.5K 0.50% 1/16W
R866	1-218-720-11	s	METAL, CHIP 15K 0.50% 1/16W
R867	1-218-740-11	s	METAL, CHIP 100K 0.50% 1/16W
R868	1-218-720-11	s	METAL, CHIP 15K 0.50% 1/16W
R869	1-218-740-11	s	METAL, CHIP 100K 0.50% 1/16W

(TC-101 BOARD)

Ref. No. or Q'ty	Part No.	SP	Description
R870	1-218-692-11	s	METAL, CHIP 1K 0.50% 1/16W
R871	1-218-716-11	s	METAL, CHIP 10K 0.50% 1/16W
R872	1-218-716-11	s	METAL, CHIP 10K 0.50% 1/16W
R873	1-218-748-11	s	METAL, CHIP 220K 0.50% 1/16W
R874	1-218-748-11	s	METAL, CHIP 220K 0.50% 1/16W
R875	1-218-692-11	s	METAL, CHIP 1K 0.50% 1/16W
R876	1-218-692-11	s	METAL, CHIP 1K 0.50% 1/16W
R877	1-218-692-11	s	METAL, CHIP 1K 0.50% 1/16W
R878	1-218-692-11	s	METAL, CHIP 1K 0.50% 1/16W
R879	1-218-692-11	s	METAL, CHIP 1K 0.50% 1/16W
R881	1-218-748-11	s	METAL, CHIP 220K 0.50% 1/16W
R882	1-218-700-11	s	METAL, CHIP 2.2K 0.50% 1/16W
R883	1-218-716-11	s	METAL, CHIP 10K 0.50% 1/16W
R884	1-218-748-11	s	METAL, CHIP 220K 0.50% 1/16W
R885	1-218-732-11	s	METAL, CHIP 47K 0.50% 1/16W
R886	1-218-700-11	s	METAL, CHIP 2.2K 0.50% 1/16W
R887	1-218-748-11	s	METAL, CHIP 220K 0.50% 1/16W
R888	1-218-748-11	s	METAL, CHIP 220K 0.50% 1/16W
R889	1-218-748-11	s	METAL, CHIP 220K 0.50% 1/16W
R890	1-218-692-11	s	METAL, CHIP 1K 0.50% 1/16W
R891	1-218-748-11	s	METAL, CHIP 220K 0.50% 1/16W
R892	1-218-748-11	s	METAL, CHIP 220K 0.50% 1/16W
R893	1-218-748-11	s	METAL, CHIP 220K 0.50% 1/16W
R894	1-218-748-11	s	METAL, CHIP 220K 0.50% 1/16W
R895	1-218-748-11	s	METAL, CHIP 220K 0.50% 1/16W
R896	1-218-748-11	s	METAL, CHIP 220K 0.50% 1/16W
R897	1-218-740-11	s	METAL, CHIP 100K 0.50% 1/16W
R898	1-218-728-11	s	METAL, CHIP 33K 0.50% 1/16W
R899	1-218-724-11	s	METAL, CHIP 22K 5% 1/16W
R900	1-216-864-11	s	METAL, CHIP 0 5% 1/16W
R901	1-218-732-11	s	METAL, CHIP 47K 0.50% 1/16W
R902	1-218-724-11	s	METAL, CHIP 22K 5% 1/16W
R903	1-218-732-11	s	METAL, CHIP 47K 0.50% 1/16W
R904	1-218-748-11	s	METAL, CHIP 220K 0.50% 1/16W
R905	1-218-692-11	s	METAL, CHIP 1K 0.50% 1/16W
R907	1-218-748-11	s	METAL, CHIP 220K 0.50% 1/16W
R908	1-218-748-11	s	METAL, CHIP 220K 0.50% 1/16W
R909	1-218-680-11	s	METAL, CHIP 330 0.50% 1/16W
R910	1-218-680-11	s	METAL, CHIP 330 0.50% 1/16W
R911	1-218-700-11	s	METAL, CHIP 2.2K 0.50% 1/16W
R912	1-218-732-11	s	METAL, CHIP 47K 0.50% 1/16W
R913	1-218-732-11	s	METAL, CHIP 47K 0.50% 1/16W
R914	1-218-732-11	s	METAL, CHIP 47K 0.50% 1/16W
R915	1-218-732-11	s	METAL, CHIP 47K 0.50% 1/16W
R916	1-218-732-11	s	METAL, CHIP 47K 0.50% 1/16W
R917	1-218-732-11	s	METAL, CHIP 47K 0.50% 1/16W
R918	1-218-732-11	s	METAL, CHIP 47K 0.50% 1/16W
R919	1-218-732-11	s	METAL, CHIP 47K 0.50% 1/16W
R920	1-218-668-11	s	METAL, CHIP 100 0.50% 1/16W
R921	1-218-692-11	s	METAL, CHIP 1K 0.50% 1/16W
R922	1-218-748-11	s	METAL, CHIP 220K 0.50% 1/16W
R923	1-218-748-11	s	METAL, CHIP 220K 0.50% 1/16W
R924	1-218-748-11	s	METAL, CHIP 220K 0.50% 1/16W
R925	1-218-748-11	s	METAL, CHIP 220K 0.50% 1/16W
R926	1-218-668-11	s	METAL, CHIP 100 0.50% 1/16W
R927	1-218-748-11	s	METAL, CHIP 220K 0.50% 1/16W
R928	1-218-748-11	s	METAL, CHIP 220K 0.50% 1/16W
R929	1-218-668-11	s	METAL, CHIP 100 0.50% 1/16W
R930	1-218-748-11	s	METAL, CHIP 220K 0.50% 1/16W
R931	1-218-732-11	s	METAL, CHIP 47K 0.50% 1/16W

(TC-101 BOARD)

Ref. No. or Q'ty	Part No.	SP	Description
R932	1-218-732-11	s	METAL, CHIP 47K 0.50% 1/16W
R933	1-218-732-11	s	METAL, CHIP 47K 0.50% 1/16W
R934	1-218-732-11	s	METAL, CHIP 47K 0.50% 1/16W
R935	1-218-732-11	s	METAL, CHIP 47K 0.50% 1/16W
R936	1-218-732-11	s	METAL, CHIP 47K 0.50% 1/16W
R937	1-218-748-11	s	METAL, CHIP 220K 0.50% 1/16W
R938	1-218-716-11	s	METAL, CHIP 10K 0.50% 1/16W
R939	1-218-716-11	s	METAL, CHIP 10K 0.50% 1/16W
R940	1-218-748-11	s	METAL, CHIP 220K 0.50% 1/16W
R941	1-218-748-11	s	METAL, CHIP 220K 0.50% 1/16W
R942	1-218-716-11	s	METAL, CHIP 10K 0.50% 1/16W
R943	1-218-716-11	s	METAL, CHIP 10K 0.50% 1/16W
R944	1-218-692-11	s	METAL, CHIP 1K 0.50% 1/16W
R945	1-218-692-11	s	METAL, CHIP 1K 0.50% 1/16W
R946	1-218-692-11	s	METAL, CHIP 1K 0.50% 1/16W
R947	1-218-692-11	s	METAL, CHIP 1K 0.50% 1/16W
R948	1-218-692-11	s	METAL, CHIP 1K 0.50% 1/16W
R949	1-218-748-11	s	METAL, CHIP 220K 0.50% 1/16W
R950	1-218-748-11	s	METAL, CHIP 220K 0.50% 1/16W
R951	1-218-748-11	s	METAL, CHIP 220K 0.50% 1/16W
R952	1-218-748-11	s	METAL, CHIP 220K 0.50% 1/16W
R953	1-218-716-11	s	METAL, CHIP 10K 0.50% 1/16W
R954	1-218-740-11	s	METAL, CHIP 100K 0.50% 1/16W
R955	1-216-864-11	s	METAL, CHIP 0 5% 1/16W
R956	1-216-864-11	s	METAL, CHIP 0 5% 1/16W
R960	1-218-668-11	s	METAL, CHIP 100 0.50% 1/16W
R961	1-218-668-11	s	METAL, CHIP 100 0.50% 1/16W
R962*g'	1-216-864-11	s	METAL, CHIP 0 5% 1/16W
R965*g'	1-218-708-11	s	METAL, CHIP 4.7K 0.50% 1/16W
R966*g'	1-218-748-11	s	METAL, CHIP 220K 0.50% 1/16W
R967*g'	1-218-746-11	s	METAL, CHIP 180K 0.50% 1/16W
R968*g'	1-216-864-11	s	METAL, CHIP 0 5% 1/16W
R969*g'	1-218-748-11	s	METAL, CHIP 220K 0.50% 1/16W
R972*j'	1-216-864-11	s	METAL, CHIP 0 5% 1/16W
RB101	1-236-907-11	s	RESISTOR BLOCK, CHIP 100KX4
RB601	1-239-436-11	s	RESISTOR BLOCK, CHIP 33KX4
RB802	1-239-444-11	s	RESUSTIR BLOCK, CHIP 220K
RB803	1-239-436-11	s	RESISTOR BLOCK, CHIP 33KX4
RB805	1-239-444-11	s	RESUSTIR BLOCK, CHIP 220K
RB806	1-239-444-11	s	RESUSTIR BLOCK, CHIP 220K
RB808	1-239-444-11	s	RESUSTIR BLOCK, CHIP 220K
RB809	1-239-444-11	s	RESUSTIR BLOCK, CHIP 220K
RB811	1-239-444-11	s	RESUSTIR BLOCK, CHIP 220K
RB812	1-239-444-11	s	RESUSTIR BLOCK, CHIP 220K
RB813	1-239-426-11	s	NETWORK RESISTOR (CHIP) 2.2K
RB814	1-239-430-11	s	NETWORK RESISTOR (CHIP) 4.7K
RB815	1-239-430-11	s	NETWORK RESISTOR (CHIP) 4.7K
RB816	1-239-444-11	s	RESUSTIR BLOCK, CHIP 220K
RB817	1-239-426-11	s	NETWORK RESISTOR (CHIP) 2.2K
RB818	1-239-444-11	s	RESUSTIR BLOCK, CHIP 220K
RB819	1-239-444-11	s	RESUSTIR BLOCK, CHIP 220K
RB820	1-236-904-11	s	RESISTOR BLOCK, CHIP 1KX4
RB821	1-239-444-11	s	RESUSTIR BLOCK, CHIP 220K
RB822	1-239-444-11	s	RESUSTIR BLOCK, CHIP 220K
RB823	1-239-444-11	s	RESUSTIR BLOCK, CHIP 220K
RB824	1-239-426-11	s	NETWORK RESISTOR (CHIP) 2.2K
RB825	1-239-444-11	s	RESUSTIR BLOCK, CHIP 220K
RV101	1-223-684-11	s	RES, VAR, CARBON 5K
RV102	1-223-684-11	s	RES, VAR, CARBON 5K

(TC-101 BOARD)

Ref. No. or Q'ty	Part No.	SP	Description
RV103	1-237-039-11	s	RES, ADJ METAL 100K
RV104	1-237-039-11	s	RES, ADJ METAL 100K
RV601	1-237-033-11	s	RES, ADJ METAL 1K
RV602	1-237-033-11	s	RES, ADJ METAL 1K
S101	1-571-277-31	s	SWITCH, SLIDE
S102	1-570-860-11	s	SWITCH, SLIDE
S103	1-570-860-11	s	SWITCH, SLIDE
S104	1-570-842-11	s	SWITCH, SLIDE
S105	1-570-842-11	s	SWITCH, SLIDE
S106	1-571-277-31	s	SWITCH, SLIDE
S107	1-571-277-31	s	SWITCH, SLIDE
S108	1-570-852-11	s	SWITCH, SLIDE
S601	1-571-275-31	s	SWITCH, SLIDE
S602	1-571-275-31	s	SWITCH, SLIDE
S603	1-571-275-31	s	SWITCH, SLIDE
S801	1-570-860-11	s	SWITCH, SLIDE
S802	1-692-881-41	s	SWITCH, SLIDE
S803	1-570-852-11	s	SWITCH, SLIDE
S804	1-570-852-11	s	SWITCH, SLIDE
S805	1-570-852-11	s	SWITCH, SLIDE
S806	1-570-852-11	s	SWITCH, SLIDE
S807	1-572-725-11	s	SWITCH, PUSH
S808	1-572-725-11	s	SWITCH, PUSH
S809	1-570-860-11	s	SWITCH, SLIDE
S810	1-572-725-11	s	SWITCH, PUSH
S811	1-572-725-11	s	SWITCH, PUSH
S812	1-572-725-11	s	SWITCH, PUSH
X801	1-760-272-11	s	VIBRATOR, CRYSTAL
X802	1-767-347-11	s	VIBRATOR, CRYSTAL
X804	1-760-622-21	s	VIBRATOR, CRYSTAL 32.76800kHz

TG-206/206P BOARD

Note
*5: for DVW-707
*6: for DVW-707P

*n': Serial No.40106 and higher (707P)
*p': Serial No.10056 and higher (707 SY)
30006 and higher (707 J)
40001 through 40105 (707P)
*q': Serial No.40166 and higher (707P)
*r': Serial No.10001 through 10020 (707 SY)
10056 and higher (707 SY)
30001 and higher (707 J)
40001 through 40165 (707P)
*s': Serial No.10021 through 10055 (707SY)

Ref. No. or Q'ty	Part No.	SP	Description
1pc	A-8321-731-A	o	MOUNTED CIRCUIT BOARD, TG-206 [for *5]
1pc	A-8321-732-A	o	MOUNTED CIRCUIT BAORD, TG-206P [for *6]
C1	1-113-985-11	s	TANTALUM, CHIP 10uF 20% 20V
C2	1-164-156-11	s	CERAMIC, CHIP 0.1uF 25V
C3*n'	1-162-919-11	s	CERAMIC, CHIP 22PF 5% 50V
C3*p'	1-162-915-11	s	CAPACITOR, CERAMIC 10PF/50V CH
C4	1-162-919-11	s	CERAMIC, CHIP 22PF 5% 50V
C5	1-164-156-11	s	CERAMIC, CHIP 0.1uF 25V
C7	1-162-919-11	s	CERAMIC, CHIP 22PF 5% 50V
C9	1-113-985-11	s	TANTALUM, CHIP 10uF 20% 20V
C10	1-164-156-11	s	CERAMIC, CHIP 0.1uF 25V
C11	1-164-156-11	s	CERAMIC, CHIP 0.1uF 25V
C12	1-164-156-11	s	CERAMIC, CHIP 0.1uF 25V
C14	1-162-915-11	s	CERAMIC, CHIP 10PF 50V
C15	1-162-915-11	s	CERAMIC, CHIP 10PF 50V
C16	1-164-156-11	s	CERAMIC, CHIP 0.1uF 25V
C17	1-164-156-11	s	CERAMIC, CHIP 0.1uF 25V
C18	1-113-985-11	s	TANTALUM, CHIP 10uF 20% 20V
C20	1-104-851-11	s	TANTALUM, CHIP 10uF 20% 10V
C21	1-113-985-11	s	TANTALUM, CHIP 10uF 20% 20V
C22	1-164-156-11	s	CERAMIC, CHIP 0.1uF 25V
C23	1-162-927-11	s	CERAMIC, CHIP 100PF 5% 50V
C24	1-164-156-11	s	CERAMIC, CHIP 0.1uF 25V
C25	1-164-156-11	s	CERAMIC, CHIP 0.1uF 25V
C27	1-164-156-11	s	CERAMIC, CHIP 0.1uF 25V
C28	1-164-156-11	s	CERAMIC, CHIP 0.1uF 25V
C31	1-162-919-11	s	CERAMIC, CHIP 22PF 5% 50V
C32	1-162-917-11	s	CERAMIC, CHIP 15PF 5% 50V
C35	1-162-919-11	s	CERAMIC, CHIP 22PF 5% 50V
C36	1-162-915-11	s	CERAMIC, CHIP 10PF 50V
C38	1-162-915-11	s	CERAMIC, CHIP 10PF 50V
C39	1-162-919-11	s	CERAMIC, CHIP 22PF 5% 50V
C43	1-164-156-11	s	CERAMIC, CHIP 0.1uF 25V
C44	1-104-851-11	s	TANTALUM, CHIP 10uF 20% 10V
C45	1-107-686-11	s	TANTALUM, CHIP 4.7uF 20% 16V
CN1	1-691-943-21	o	CONNECTOR, BOARD TO BOARD 30P
CN2	1-568-367-11	s	CONNECTOR, BOARD TO BOARD 18P
CN3	1-568-367-11	s	CONNECTOR, BOARD TO BOARD 18P
D1	8-719-029-57	s	DIODE RD2.4UH-T1
D3	8-719-948-48	s	DIODE HSM88AS-TL
D4	8-719-948-48	s	DIODE HSM88AS-TL
IC1	8-752-353-25	s	IC CXD1265R-T6
IC2	8-759-523-94	s	IC TC74VHC32FT(EL)
IC3	8-759-523-94	s	IC TC74VHC32FT(EL)

(TG-206/206P BOARD)

Ref. No. or Q'ty	Part No.	SP	Description
IC4	8-759-491-46	s	IC TC74VHCT04AFT(EL)
IC5	8-759-523-95	s	IC TC74VHC74FT(EL)
IC6	8-759-491-46	s	IC TC74VHCT04AFT(EL)
IC7	8-759-523-78	s	IC TC74VHC00FT(EL)
IC8	8-759-337-40	s	IC NJM2904V(TE2)
IC9	8-759-058-55	s	IC TC7S02FU-TE85L
IC10	8-759-196-93	s	IC TC7SH00FU-TE85R
IC11	8-759-196-96	s	IC TC7SH08FU-TE85R
IC12	8-759-196-96	s	IC TC7SH08FU-TE85R
IC13	8-759-050-92	s	IC SN74HC164APW-E05
IC14	8-759-392-01	s	IC TC7SH86FU-TE85R
IC16	8-759-196-97	s	IC TC7SH32FU-TE85R
IC17	8-759-196-93	s	IC TC7SH00FU-TE85R
IC18	8-759-049-60	s	IC SN74HC08APW-E05
Q1	8-729-141-48	s	TRANSISTOR 2SB624-BV345
R1	1-218-652-11	s	METAL, CHIP 22 0.50% 1/16W [for *6]
R1	1-218-664-11	s	RESISTOR, CHIP 68 1/16W (1608) [for *5]
R2	1-218-652-11	s	METAL, CHIP 22 0.50% 1/16W
R3	1-218-644-11	s	METAL, CHIP 10 0.50% 1/16W
R4	1-218-644-11	s	METAL, CHIP 10 0.50% 1/16W
R5*q'	1-218-671-11	s	RESISTOR, CHIP 130 1/16W (1608)
R5*r'	1-218-667-11	s	METAL, CHIP 91 0.50% 1/16W
R5*s'	1-216-864-11	s	RESISTOR, CHIP 1.1K 1/10W (2012)
R6	1-218-652-11	s	METAL, CHIP 22 0.50% 1/16W
R7	1-218-668-11	s	METAL, CHIP 100 0.50% 1/16W
R8	1-218-668-11	s	METAL, CHIP 100 0.50% 1/16W
R9	1-218-644-11	s	METAL, CHIP 10 0.50% 1/16W
R10	1-218-644-11	s	METAL, CHIP 10 0.50% 1/16W
R12	1-218-644-11	s	METAL, CHIP 10 0.50% 1/16W
R14	1-218-660-91	s	METAL, CHIP 47 0.50% 1/16W
R15	1-218-674-11	s	METAL, CHIP 180 0.50% 1/16W
R16	1-218-676-11	s	METAL, CHIP 220 0.50% 1/16W
R17	1-218-676-11	s	METAL, CHIP 220 0.50% 1/16W
R18	1-218-656-11	s	METAL, CHIP 33 0.50% 1/16W
R19	1-218-656-11	s	METAL, CHIP 33 0.50% 1/16W
R21	1-218-644-11	s	METAL, CHIP 10 0.50% 1/16W
R22	1-218-644-11	s	METAL, CHIP 10 0.50% 1/16W
R23	1-218-644-11	s	METAL, CHIP 10 0.50% 1/16W
R24	1-218-644-11	s	METAL, CHIP 10 0.50% 1/16W
R26	1-218-644-11	s	METAL, CHIP 10 0.50% 1/16W
R27	1-216-864-11	s	METAL, CHIP 0 5% 1/16W
R28	1-218-716-11	s	METAL, CHIP 10K 0.50% 1/16W
R29	1-218-703-11	s	METAL, CHIP 3K 0.50% 1/16W
R30	1-218-716-11	s	METAL, CHIP 10K 0.50% 1/16W
R31	1-218-672-11	s	METAL, CHIP 150 0.50% 1/16W
R32	1-218-741-11	s	METAL, CHIP 110K 0.5% 1/16W
R33	1-216-791-11	s	METAL, CHIP 3.3 5% 1/16W
R34	1-216-791-11	s	METAL, CHIP 3.3 5% 1/16W
R35	1-218-692-11	s	METAL, CHIP 1K 0.50% 1/16W
R36	1-218-734-11	s	METAL, CHIP 56K 5% 1/16W
R37	1-218-734-11	s	METAL, CHIP 56K 5% 1/16W
R38	1-218-881-11	s	METAL, CHIP 27K 0.50% 1/16W
R39	1-218-881-11	s	METAL, CHIP 27K 0.50% 1/16W
R40	1-218-716-11	s	METAL, CHIP 10K 0.50% 1/16W
R41	1-216-864-11	s	METAL, CHIP 0 5% 1/16W [for *5]
R42	1-216-864-11	s	METAL, CHIP 0 5% 1/16W [for *6]
R43	1-216-864-11	s	METAL, CHIP 0 5% 1/16W
R45	1-216-864-11	s	METAL, CHIP 0 5% 1/16W

(TG-206/206P BOARD)

Ref. No. or Q'ty	Part No.	SP	Description
R47	1-218-740-11	s	METAL, CHIP 100K 0.50% 1/16W
R48	1-218-740-11	s	METAL, CHIP 100K 0.50% 1/16W
R49	1-218-644-11	s	METAL, CHIP 10 0.50% 1/16W
R50	1-218-644-11	s	METAL, CHIP 10 0.50% 1/16W
R51	1-218-644-11	s	METAL, CHIP 10 0.50% 1/16W
R52	1-218-692-11	s	METAL, CHIP 1K 0.50% 1/16W
R53	1-216-864-11	s	METAL, CHIP 0 5% 1/16W
R55	1-218-660-91	s	METAL, CHIP 47 0.50% 1/16W
R56	1-218-660-91	s	METAL, CHIP 47 0.50% 1/16W
R57	1-218-674-11	s	METAL, CHIP 180 0.50% 1/16W
R58	1-218-660-91	s	METAL, CHIP 47 0.50% 1/16W
R59	1-218-668-11	s	METAL, CHIP 100 0.50% 1/16W
R62	1-218-652-11	s	METAL, CHIP 22 0.50% 1/16W
R63	1-216-864-11	s	METAL, CHIP 0 5% 1/16W
R65	1-218-672-11	s	METAL, CHIP 150 0.50% 1/16W
R66	1-218-652-11	s	METAL, CHIP 22 0.50% 1/16W
R67	1-218-676-11	s	METAL, CHIP 220 0.50% 1/16W
R68	1-218-668-11	s	METAL, CHIP 100 0.50% 1/16W
R69	1-218-652-11	s	METAL, CHIP 22 0.50% 1/16W
R72	1-218-652-11	s	METAL, CHIP 22 0.50% 1/16W
R73	1-218-708-11	s	METAL, CHIP 4.7K 0.50% 1/16W
R74	1-218-721-11	s	METAL, CHIP 16K 0.50% 1/16W
R75	1-218-702-11	s	METAL, CHIP 2.7K 0.50% 1/16W
R76	1-218-660-91	s	METAL, CHIP 47 0.50% 1/16W
R77	1-216-864-11	s	METAL, CHIP 0 5% 1/16W [for *5]
R78	1-216-864-11	s	METAL, CHIP 0 5% 1/16W [for *6]
R79	1-216-864-11	s	METAL, CHIP 0 5% 1/16W [for *6]
R80	1-218-732-11	s	METAL, CHIP 47K 0.50% 1/16W
R81	1-218-660-91	s	METAL, CHIP 47 0.50% 1/16W
R82	1-218-660-91	s	METAL, CHIP 47 0.50% 1/16W
RV1	1-241-828-21	s	RES, ADJ, METAL 500
RV2	1-241-828-21	s	RES, ADJ, METAL 500
X1	1-579-713-11	s	OSCILLATOR, CRYSTAL 28.6360MHz [for *5]
X1	1-767-206-11	s	OSCILLATOR, CRYSTAL [for *6]

TG-207/207P BOARD

Note
*7: for DVW-790WS/709WS
*8: for DVW-790WSP/709WSP

Note
*t': Serial No.30006 and higher (709WS J/790WS J)
10086 and higher (709WS SY/790WS SY)
40176 and higher (709WSP)
40266 and higher (790WSP)
*u': Serial No.30001 through 30005 (709WS J/790WS J)
10001 through 10085 (709WS SY/790WS SY)
40001 through 40175 (709WSP)
40001 through 40265 (790WSP)

Ref. No. or Q'ty	Part No.	SP	Description
1pc	A-8321-492-A	o	MOUTED CIRCUIT BOARD, TG-207 [for *7]
1pc	A-8321-509-A	o	MOUNTED CIRCUIT BOARD, TG-207P [for *8]
C1	1-113-985-11	s	TANTALUM, CHIP 10uF 20% 20V
C2	1-164-156-11	s	CERAMIC, CHIP 0.1uF 25V
C4	1-107-689-21	s	TANTALUM, CHIP 1uF 20% 35V
C5	1-162-970-11	s	CERAMIC, CHIP 0.01uF 10% 25V
C6	1-162-915-11	s	CERAMIC, CHIP 10PF 50V
C9	1-115-581-11	s	TANTALUM, CHIP 100uF 20% 16
C12	1-164-156-11	s	CERAMIC, CHIP 0.1uF 25V
C13	1-164-156-11	s	CERAMIC, CHIP 0.1uF 25V
C14	1-162-917-11	s	CERAMIC, CHIP 15PF 5% 50V
C15	1-162-917-11	s	CERAMIC, CHIP 15PF 5% 50V
C16	1-164-156-11	s	CERAMIC, CHIP 0.1uF 25V
C17	1-164-156-11	s	CERAMIC, CHIP 0.1uF 25V
C18	1-113-994-11	s	TANTALUM, CHIP 6.8uF 20% 16V
C20	1-113-985-11	s	TANTALUM, CHIP 10uF 20% 20V
C21	1-113-985-11	s	TANTALUM, CHIP 10uF 20% 20V
C22	1-164-156-11	s	CERAMIC, CHIP 0.1uF 25V
C23	1-162-927-11	s	CERAMIC, CHIP 100PF 5% 50V
C24	1-164-156-11	s	CERAMIC, CHIP 0.1uF 25V
C31	1-162-917-11	s	CERAMIC, CHIP 15PF 5% 50V
C32	1-162-921-11	s	CERAMIC, CHIP 33PF 5% 50V
C35	1-162-919-11	s	CERAMIC, CHIP 22PF 5% 50V
C37	1-162-919-11	s	CERAMIC, CHIP 22PF 5% 50V
C38	1-162-915-11	s	CERAMIC, CHIP 10PF 50V
C39	1-162-919-11	s	CERAMIC, CHIP 22PF 5% 50V
C41	1-162-915-11	s	CERAMIC, CHIP 10PF 50V
C47	1-164-156-11	s	CERAMIC, CHIP 0.1uF 25V
C48	1-164-156-11	s	CERAMIC, CHIP 0.1uF 25V
C49	1-162-919-11	s	CERAMIC, CHIP 22PF 5% 50V
C50	1-113-994-11	s	TANTALUM, CHIP 6.8uF 20% 16V
C51	1-162-964-11	s	CERAMIC, CHIP 0.001uF 10% 50V
C52	1-164-156-11	s	CERAMIC, CHIP 0.1uF 25V
CN1	1-691-943-21	o	CONNECTOR, BOARD TO BOARD 30P
CN2	1-568-367-11	s	CONNECTOR, BOARD TO BOARD 18P
CN3	1-568-367-11	s	CONNECTOR, BOARD TO BOARD 18P
D1	8-719-029-57	s	DIODE RD2.4UH-T1
D6	8-719-948-48	s	DIODE HSM88AS-TL
D7	8-719-948-48	s	DIODE HSM88AS-TL
D8	8-719-948-48	s	DIODE HSM88AS-TL
D9	8-719-948-48	s	DIODE HSM88AS-TL
IC2	8-759-523-94	s	IC TC74VHC32FT(EL)
IC3	8-759-523-94	s	IC TC74VHC32FT(EL)
IC4	8-759-491-46	s	IC TC74VHCT04AFT(EL)
IC5	8-759-523-95	s	IC TC74VHC74FT(EL)
IC6	8-759-523-95	s	IC TC74VHC74FT(EL)

(TG-207/207P BOARD)

Ref. No. or Q'ty	Part No.	SP	Description
IC7	8-759-523-78	s	IC TC74VHC00FT(EL)
IC8	8-759-337-40	s	IC NJM2904V(TE2)
IC9	8-759-196-97	s	IC TC7SH32FU-TE85R
IC10	8-759-196-93	s	IC TC7SH00FU-TE85R
IC11	8-759-271-86	s	IC TC7SH04FU
Q1	8-729-141-48	s	TRANSISTOR 2SB624-BV345
R1	1-218-716-11	s	METAL, CHIP 10K 0.50% 1/16W
R2	1-218-644-11	s	METAL, CHIP 10 0.50% 1/16W
R3	1-218-644-11	s	METAL, CHIP 10 0.50% 1/16W
R4	1-218-644-11	s	METAL, CHIP 10 0.50% 1/16W
R5	1-218-644-11	s	METAL, CHIP 10 0.50% 1/16W
R7	1-218-644-11	s	METAL, CHIP 10 0.50% 1/16W
R8	1-218-692-11	s	METAL, CHIP 1K 0.50% 1/16W
R9	1-218-644-11	s	METAL, CHIP 10 0.50% 1/16W
R10	1-218-644-11	s	METAL, CHIP 10 0.50% 1/16W
R11	1-218-644-11	s	METAL, CHIP 10 0.50% 1/16W
R12	1-218-644-11	s	METAL, CHIP 10 0.50% 1/16W
R14	1-218-660-91	s	METAL, CHIP 47 0.50% 1/16W
R15	1-218-676-11	s	METAL, CHIP 220 0.50% 1/16W
R16	1-218-683-11	s	METAL, CHIP 430 0.50% 1/16W
R17	1-218-683-11	s	METAL, CHIP 430 0.50% 1/16W
R18	1-218-656-11	s	METAL, CHIP 33 0.50% 1/16W
R19	1-218-656-11	s	METAL, CHIP 33 0.50% 1/16W
R20	1-218-644-11	s	METAL, CHIP 10 0.50% 1/16W
R21	1-218-644-11	s	METAL, CHIP 10 0.50% 1/16W
R22	1-218-644-11	s	METAL, CHIP 10 0.50% 1/16W
R23	1-218-644-11	s	METAL, CHIP 10 0.50% 1/16W
R24	1-218-644-11	s	METAL, CHIP 10 0.50% 1/16W
R25	1-218-644-11	s	METAL, CHIP 10 0.50% 1/16W
R26	1-218-644-11	s	METAL, CHIP 10 0.50% 1/16W
R27	1-216-864-11	s	METAL, CHIP 0 5% 1/16W
R28	1-218-716-11	s	METAL, CHIP 10K 0.50% 1/16W
R29	1-218-703-11	s	METAL, CHIP 3K 0.50% 1/16W
R30	1-218-716-11	s	METAL, CHIP 10K 0.50% 1/16W
R31	1-218-672-11	s	METAL, CHIP 150 0.50% 1/16W
R32	1-218-740-11	s	METAL, CHIP 100K 0.50% 1/16W
R33	1-216-791-11	s	METAL, CHIP 3.3 5% 1/16W
R34	1-216-791-11	s	METAL, CHIP 3.3 5% 1/16W
R35	1-218-692-11	s	METAL, CHIP 1K 0.50% 1/16W
R36	1-218-734-11	s	METAL, CHIP 56K 5% 1/16W
R37	1-218-734-11	s	METAL, CHIP 56K 5% 1/16W
R38	1-218-881-11	s	METAL, CHIP 27K 0.50% 1/16W
R39	1-218-881-11	s	METAL, CHIP 27K 0.50% 1/16W
R40	1-218-681-11	s	METAL, CHIP 360 0.50% 1/16W
R41	1-216-864-11	s	METAL, CHIP 0 5% 1/16W [for *7]
R42	1-216-864-11	s	METAL, CHIP 0 5% 1/16W [for *8]
R44	1-216-864-11	s	METAL, CHIP 0 5% 1/16W
R47	1-218-668-11	s	METAL, CHIP 100 0.50% 1/16W
R48	1-218-740-11	s	METAL, CHIP 100K 0.50% 1/16W
R49	1-218-644-11	s	METAL, CHIP 10 0.50% 1/16W
R50	1-218-652-11	s	METAL, CHIP 22 0.50% 1/16W
R51	1-218-644-11	s	METAL, CHIP 10 0.50% 1/16W
R52	1-218-692-11	s	METAL, CHIP 1K 0.50% 1/16W
R56	1-218-660-91	s	METAL, CHIP 47 0.50% 1/16W
R57	1-218-670-11	s	METAL, CHIP 120 0.50% 1/16W
R59	1-218-668-11	s	METAL, CHIP 100 0.50% 1/16W
R62	1-218-675-11	s	METAL, CHIP 200 0.50% 1/16W
R63	1-216-864-11	s	METAL, CHIP 0 5% 1/16W
R65	1-218-672-11	s	METAL, CHIP 150 0.50% 1/16W
R66	1-218-676-11	s	METAL, CHIP 220 0.50% 1/16W

(TG-207/207P BOARD)

Ref. No. or Q'ty	Part No.	SP	Description
R67*t'	1-218-668-11	s	METAL, CHIP 100 0.50% 1/16W
R67*u'	1-218-676-11	s	METAL, CHIP 220 0.50% 1/16W
R68	1-218-692-11	s	METAL, CHIP 1K 0.50% 1/16W
R70	1-218-644-11	s	METAL, CHIP 10 0.50% 1/16W
R71	1-218-660-91	s	METAL, CHIP 47 0.50% 1/16W
R73	1-218-708-11	s	METAL, CHIP 4.7K 0.50% 1/16W
R74	1-218-702-11	s	METAL, CHIP 2.7K 0.50% 1/16W
R75	1-218-702-11	s	METAL, CHIP 2.7K 0.50% 1/16W
R76	1-218-660-91	s	METAL, CHIP 47 0.50% 1/16W
R79	1-218-684-11	s	METAL, CHIP 470 0.50% 1/16W
R80	1-218-680-11	s	METAL, CHIP 330 0.50% 1/16W
R81	1-218-684-11	s	METAL, CHIP 470 0.50% 1/16W
R82	1-218-692-11	s	METAL, CHIP 1K 0.50% 1/16W
R83	1-218-708-11	s	METAL, CHIP 4.7K 0.50% 1/16W
R84	1-218-692-11	s	METAL, CHIP 1K 0.50% 1/16W
RV1	1-241-828-21	s	RES, ADJ, METAL 500
RV2	1-241-828-21	s	RES, ADJ, METAL 500
S1	1-571-275-31	s	SWITCH, SLIDE
S2	1-571-275-31	s	SWITCH, SLIDE
X1	1-579-715-11	s	OSCILLATOR, CRYSTAL 36.000000MHz [for *8]

VA-191 BOARD

Note

*v': Serial No.10056 and higher (707 SY)
30006 and higher (707 J/709WS J/790WS J)
10086 and higher (709WS SY/790WS SY)
40106 and higher (707P)
40176 and higher (709WSP)
40266 and higher (790WSP)

*w': Serial No.10001 through 10055 (707 SY)
30001 through 30005 (707 J/709WS J/790WS J)
10001 through 10085 (709WS SY/790WS SY)
40001 through 40105 (707P)
40001 through 40175 (709WSP)
40001 through 40265 (790WSP)

Ref. No. or Q'ty	Part No.	SP	Description
1pc	A-8321-491-A	o	MOUNTED CIRCUIT BOARD, VA-191
C1	1-115-581-11	s	TANTALUM, CHIP 100uF 20% 16
C2	1-115-581-11	s	TANTALUM, CHIP 100uF 20% 16
C6	1-164-156-11	s	CERAMIC, CHIP 0.1uF 25V
C7	1-107-685-11	s	TANTALUM, CHIP 15uF 20% 6.3V
C8	1-135-177-21	s	TANTALUM, CHIP 1uF 10% 25V
C10	1-164-156-11	s	CERAMIC, CHIP 0.1uF 25V
C11	1-135-177-21	s	TANTALUM, CHIP 1uF 10% 25V
C12	1-113-994-11	s	TANTALUM, CHIP 6.8uF 20% 16V
C13	1-164-156-11	s	CERAMIC, CHIP 0.1uF 25V
C14	1-164-156-11	s	CERAMIC, CHIP 0.1uF 25V
C15	1-164-156-11	s	CERAMIC, CHIP 0.1uF 25V
C16	1-164-156-11	s	CERAMIC, CHIP 0.1uF 25V
C17	1-135-179-21	s	TANTALUM, CHIP 2.2uF 10% 16V
C18	1-162-927-11	s	CERAMIC, CHIP 100PF 5% 50V
C19	1-162-927-11	s	CERAMIC, CHIP 100PF 5% 50V
C20	1-164-217-11	s	CERAMIC, CHIP 150PF 5% 50V
C21	1-104-563-11	s	FILM, CHIP 0.1uF 5% 16V
C22	1-104-563-11	s	FILM, CHIP 0.1uF 5% 16V
C23	1-104-563-11	s	FILM, CHIP 0.1uF 5% 16V
C24	1-164-156-11	s	CERAMIC, CHIP 0.1uF 25V
C25	1-164-156-11	s	CERAMIC, CHIP 0.1uF 25V
C26	1-164-156-11	s	CERAMIC, CHIP 0.1uF 25V
C27	1-164-156-11	s	CERAMIC, CHIP 0.1uF 25V
C28	1-164-156-11	s	CERAMIC, CHIP 0.1uF 25V
C29	1-164-156-11	s	CERAMIC, CHIP 0.1uF 25V
C30	1-164-156-11	s	CERAMIC, CHIP 0.1uF 25V
C31	1-164-230-11	s	CERAMIC 220PF 5% 50V
C32	1-164-156-11	s	CERAMIC, CHIP 0.1uF 25V
C33	1-135-210-11	s	TANTALUM, CHIP 4.7uF 20% 10V
C34	1-135-210-11	s	TANTALUM, CHIP 4.7uF 20% 10V
C35	1-135-210-11	s	TANTALUM, CHIP 4.7uF 20% 10V
C36	1-113-994-11	s	TANTALUM, CHIP 6.8uF 20% 16V
C37	1-162-907-11	s	CERAMIC, CHIP 2PF 50V
C38	1-164-156-11	s	CERAMIC, CHIP 0.1uF 25V
C39	1-162-919-11	s	CERAMIC, CHIP 22PF 5% 50V
C40	1-162-919-11	s	CERAMIC, CHIP 22PF 5% 50V
C41	1-162-919-11	s	CERAMIC, CHIP 22PF 5% 50V
C42	1-164-156-11	s	CERAMIC, CHIP 0.1uF 25V
C43	1-162-970-11	s	CERAMIC, CHIP 0.01uF 10% 25V
C101	1-113-990-11	s	TANTALUM, CHIP 15uF 20% 16V
C102	1-164-156-11	s	CERAMIC, CHIP 0.1uF 25V
C103	1-113-990-11	s	TANTALUM, CHIP 15uF 20% 16V
C104	1-164-156-11	s	CERAMIC, CHIP 0.1uF 25V
C105	1-104-851-11	s	TANTALUM, CHIP 10uF 20% 10V
C106	1-135-210-11	s	TANTALUM, CHIP 4.7uF 20% 10V
C107	1-135-210-11	s	TANTALUM, CHIP 4.7uF 20% 10V
C108	1-162-921-11	s	CERAMIC, CHIP 33PF 5% 50V

(VA-191 BOARD)

Ref. No. or Q'ty	Part No.	SP	Description
C109	1-162-919-11	s	CERAMIC, CHIP 22PF 5% 50V
C111	1-162-907-11	s	CERAMIC, CHIP 2PF 50V
C112	1-162-907-11	s	CERAMIC, CHIP 2PF 50V
C116	1-164-156-11	s	CERAMIC, CHIP 0.1uF 25V
C117	1-164-156-11	s	CERAMIC, CHIP 0.1uF 25V
C118	1-135-210-11	s	TANTALUM, CHIP 4.7uF 20% 10V
C119	1-135-210-11	s	TANTALUM, CHIP 4.7uF 20% 10V
C120	1-162-909-11	s	CERAMIC, CHIP 4PF 0.25PF 50V
C121	1-164-156-11	s	CERAMIC, CHIP 0.1uF 25V
C123	1-164-156-11	s	CERAMIC, CHIP 0.1uF 25V
C124	1-113-994-11	s	TANTALUM, CHIP 6.8uF 20% 16V
C125	1-115-581-11	s	TANTALUM, CHIP 100uF 20% 16
C126	1-135-177-21	s	TANTALUM, CHIP 1uF 10% 25V
C127	1-135-177-21	s	TANTALUM, CHIP 1uF 10% 25V
C128	1-164-156-11	s	CERAMIC, CHIP 0.1uF 25V
C129	1-164-156-11	s	CERAMIC, CHIP 0.1uF 25V
C132	1-113-682-11	s	TANTALUM, CHIP 33uF 20% 10V
C134	1-113-994-11	s	TANTALUM, CHIP 6.8uF 20% 16V
C137	1-113-682-11	s	TANTALUM, CHIP 33uF 20% 10V
C138	1-135-190-21	s	TANTALUM, CHIP 0.1uF 10% 20V
C139	1-135-233-21	s	TANTALUM, CHIP 0.33uF 20% 16V
C140	1-135-190-21	s	TANTALUM, CHIP 0.1uF 10% 20V
C141	1-135-233-21	s	TANTALUM, CHIP 0.33uF 20% 16V
C143	1-162-927-11	s	CERAMIC, CHIP 100PF 5% 50V
C201	1-115-581-11	s	TANTALUM, CHIP 100uF 20% 16
C202	1-164-156-11	s	CERAMIC, CHIP 0.1uF 25V
C203	1-115-581-11	s	TANTALUM, CHIP 100uF 20% 16
C204	1-164-156-11	s	CERAMIC, CHIP 0.1uF 25V
C205	1-104-851-11	s	TANTALUM, CHIP 10uF 20% 10V
C206	1-135-210-11	s	TANTALUM, CHIP 4.7uF 20% 10V
C207	1-135-210-11	s	TANTALUM, CHIP 4.7uF 20% 10V
C208	1-162-921-11	s	CERAMIC, CHIP 33PF 5% 50V
C209	1-162-919-11	s	CERAMIC, CHIP 22PF 5% 50V
C211	1-162-907-11	s	CERAMIC, CHIP 2PF 50V
C212	1-162-907-11	s	CERAMIC, CHIP 2PF 50V
C216	1-164-156-11	s	CERAMIC, CHIP 0.1uF 25V
C217	1-164-156-11	s	CERAMIC, CHIP 0.1uF 25V
C218	1-135-210-11	s	TANTALUM, CHIP 4.7uF 20% 10V
C219	1-135-210-11	s	TANTALUM, CHIP 4.7uF 20% 10V
C220	1-162-909-11	s	CERAMIC, CHIP 4PF 0.25PF 50V
C221	1-164-156-11	s	CERAMIC, CHIP 0.1uF 25V
C223	1-164-156-11	s	CERAMIC, CHIP 0.1uF 25V
C224	1-113-994-11	s	TANTALUM, CHIP 6.8uF 20% 16V
C225	1-115-581-11	s	TANTALUM, CHIP 100uF 20% 16
C226	1-135-177-21	s	TANTALUM, CHIP 1uF 10% 25V
C227	1-135-177-21	s	TANTALUM, CHIP 1uF 10% 25V
C228	1-164-156-11	s	CERAMIC, CHIP 0.1uF 25V
C229	1-164-156-11	s	CERAMIC, CHIP 0.1uF 25V
C232	1-113-682-11	s	TANTALUM, CHIP 33uF 20% 10V
C234	1-113-994-11	s	TANTALUM, CHIP 6.8uF 20% 16V
C235	1-164-156-11	s	CERAMIC, CHIP 0.1uF 25V
C237	1-113-682-11	s	TANTALUM, CHIP 33uF 20% 10V
C238	1-135-190-21	s	TANTALUM, CHIP 0.1uF 10% 20V
C239	1-135-233-21	s	TANTALUM, CHIP 0.33uF 20% 16V
C240	1-135-190-21	s	TANTALUM, CHIP 0.1uF 10% 20V
C241	1-135-233-21	s	TANTALUM, CHIP 0.33uF 20% 16V
C243	1-162-927-11	s	CERAMIC, CHIP 100PF 5% 50V
C301	1-113-990-11	s	TANTALUM, CHIP 15uF 20% 16V
C302	1-164-156-11	s	CERAMIC, CHIP 0.1uF 25V
C303	1-113-990-11	s	TANTALUM, CHIP 15uF 20% 16V

(VA-191 BOARD)

Ref. No. or Q'ty	Part No.	SP	Description
C304	1-164-156-11	s	CERAMIC, CHIP 0.1uF 25V
C305	1-104-851-11	s	TANTALUM, CHIP 10uF 20% 10V
C306	1-135-210-11	s	TANTALUM, CHIP 4.7uF 20% 10V
C307	1-135-210-11	s	TANTALUM, CHIP 4.7uF 20% 10V
C308	1-162-921-11	s	CERAMIC, CHIP 33PF 5% 50V
C309	1-162-919-11	s	CERAMIC, CHIP 22PF 5% 50V
C311	1-162-905-11	s	CERAMIC, CHIP 1PF 50V
C312	1-162-905-11	s	CERAMIC, CHIP 1PF 50V
C316	1-164-156-11	s	CERAMIC, CHIP 0.1uF 25V
C317	1-164-156-11	s	CERAMIC, CHIP 0.1uF 25V
C318	1-135-210-11	s	TANTALUM, CHIP 4.7uF 20% 10V
C319	1-135-210-11	s	TANTALUM, CHIP 4.7uF 20% 10V
C320	1-162-909-11	s	CERAMIC, CHIP 4PF 0.25PF 50V
C321	1-164-156-11	s	CERAMIC, CHIP 0.1uF 25V
C323	1-164-156-11	s	CERAMIC, CHIP 0.1uF 25V
C324	1-113-994-11	s	TANTALUM, CHIP 6.8uF 20% 16V
C325	1-115-581-11	s	TANTALUM, CHIP 100uF 20% 16
C326	1-135-177-21	s	TANTALUM, CHIP 1uF 10% 25V
C327	1-135-177-21	s	TANTALUM, CHIP 1uF 10% 25V
C328	1-164-156-11	s	CERAMIC, CHIP 0.1uF 25V
C329	1-164-156-11	s	CERAMIC, CHIP 0.1uF 25V
C332	1-113-682-11	s	TANTALUM, CHIP 33uF 20% 10V
C334	1-113-994-11	s	TANTALUM, CHIP 6.8uF 20% 16V
C337	1-113-682-11	s	TANTALUM, CHIP 33uF 20% 10V
C338	1-135-190-21	s	TANTALUM, CHIP 0.1uF 10% 20V
C339	1-135-233-21	s	TANTALUM, CHIP 0.33uF 20% 16V
C340	1-135-190-21	s	TANTALUM, CHIP 0.1uF 10% 20V
C341	1-135-233-21	s	TANTALUM, CHIP 0.33uF 20% 16V
C343	1-162-927-11	s	CERAMIC, CHIP 100PF 5% 50V
CN1	1-568-361-21	s	CONNECTOR, BOARD TO BOARD 24P
CN2	1-778-552-11	o	PIN, CONNECTOR 30P
CN3	1-569-607-21	o	CONNECTOR, BOARD TO BOARD 24P
D1	8-719-948-48	s	DIODE HSM88AS-TL
D2	8-719-029-63	s	DIODE RD4.3UH-T1
D3	8-719-029-63	s	DIODE RD4.3UH-T1
D4	8-719-820-41	s	DIODE 1SS302
D5	8-719-820-41	s	DIODE 1SS302
D103	8-719-948-48	s	DIODE HSM88AS-TL
D203	8-719-948-48	s	DIODE HSM88AS-TL
D303	8-719-948-48	s	DIODE HSM88AS-TL
FL101	1-402-639-11	s	FILTER, TRAP
FL102	1-239-620-21	s	FILTER, TRAP
FL201	1-402-639-11	s	FILTER, TRAP
FL202	1-239-620-21	s	FILTER, TRAP
FL301	1-402-639-11	s	FILTER, TRAP
FL302	1-239-620-21	s	FILTER, TRAP
IC1	8-759-970-59	s	IC TLC272CPS
IC2	8-759-111-56	s	IC UPC4572G2
IC3	8-759-234-77	s	IC TC4S66F
IC4	8-759-523-81	s	IC TC74VHC08FT(EL)
IC5	8-759-084-79	s	IC TC7S14F
IC6	8-759-523-04	s	IC TC74HC4538AFT(EL)
IC7	8-759-175-02	s	IC TL074CPW
IC8	8-759-082-61	s	IC TC4W53FU
IC9	8-759-635-27	s	IC M62352GP
IC10	8-759-059-50	s	IC MB88351PFV
IC11	8-759-175-04	s	IC PCF8574T-T
IC12	8-759-271-86	s	IC TC7SH04FU

(VA-191 BOARD)

Ref. No. or Q'ty	Part No.	SP	Description
IC13	8-759-257-96	s	IC TC7S14FU(TE85R)
IC16	8-759-523-02	s	IC TC74HC4053AFT(EL)
IC17	8-759-175-02	s	IC TL074CPW
IC18	8-759-523-02	s	IC TC74HC4053AFT(EL)
IC19	8-759-059-50	s	IC MB88351PFV
IC101	8-759-463-81	s	IC TLC2272CPW-E05
IC102	8-759-523-02	s	IC TC74HC4053AFT(EL)
IC103	8-752-068-64	s	IC CXA1486Q-TH
IC104	8-759-082-61	s	IC TC4W53FU
IC201	8-759-463-81	s	IC TLC2272CPW-E05
IC202	8-759-523-02	s	IC TC74HC4053AFT(EL)
IC203	8-752-068-64	s	IC CXA1486Q-TH
IC204	8-759-082-61	s	IC TC4W53FU
IC301	8-759-463-81	s	IC TLC2272CPW-E05
IC302	8-759-523-02	s	IC TC74HC4053AFT(EL)
IC303	8-752-068-64	s	IC CXA1486Q-TH
IC304	8-759-082-61	s	IC TC4W53FU
L1	1-410-385-11	s	INDUCTOR, CHIP 22uH
L6	1-412-955-11	s	INDUCTOR 22uH
L7	1-412-955-11	s	INDUCTOR 22uH
L8	1-412-955-11	s	INDUCTOR 22uH
L101	1-412-935-11	s	INDUCTOR 0.47uH
L103	1-410-382-31	s	INDUCTOR, CHIP 12uH
L104	1-410-382-31	s	INDUCTOR, CHIP 12uH
L201	1-412-935-11	s	INDUCTOR 0.47uH
L203	1-410-382-31	s	INDUCTOR, CHIP 12uH
L204	1-410-382-31	s	INDUCTOR, CHIP 12uH
L301	1-412-935-11	s	INDUCTOR 0.47uH
L303	1-410-382-31	s	INDUCTOR, CHIP 12uH
L304	1-410-382-31	s	INDUCTOR, CHIP 12uH
Q2	8-729-141-48	s	TRANSISTOR 2SB624-BV345
Q3	8-729-141-75	s	TRANSISTOR 2SD596DV345
Q4	8-729-402-78	s	TRANSISTOR XN6401
Q5	8-729-402-19	s	TRANSISTOR XN6501
Q6	8-729-402-19	s	TRANSISTOR XN6501
Q9	8-729-403-29	s	TRANSISTOR XN6435
Q10	8-729-403-29	s	TRANSISTOR XN6435
Q11	8-729-122-63	s	TRANSISTOR 2SA1226
Q12	8-729-122-63	s	TRANSISTOR 2SA1226
Q13	8-729-122-63	s	TRANSISTOR 2SA1226
Q14	8-729-141-75	s	TRANSISTOR 2SD596DV345
Q101	8-729-117-32	s	TRANSISTOR 2SC4177
Q102	8-729-403-29	s	TRANSISTOR XN6435
Q103	8-729-122-63	s	TRANSISTOR 2SA1226
Q104	8-729-122-63	s	TRANSISTOR 2SA1226
Q105	8-729-403-32	s	TRANSISTOR XN6534
Q106	8-729-403-32	s	TRANSISTOR XN6534
Q109	8-729-117-32	s	TRANSISTOR 2SC4177
Q113	8-729-403-32	s	TRANSISTOR XN6534
Q114	8-729-117-32	s	TRANSISTOR 2SC4177
Q201	8-729-117-32	s	TRANSISTOR 2SC4177
Q202	8-729-403-29	s	TRANSISTOR XN6435
Q203	8-729-122-63	s	TRANSISTOR 2SA1226
Q204	8-729-122-63	s	TRANSISTOR 2SA1226
Q205	8-729-403-32	s	TRANSISTOR XN6534
Q206	8-729-403-32	s	TRANSISTOR XN6534
Q209	8-729-117-32	s	TRANSISTOR 2SC4177
Q213	8-729-403-32	s	TRANSISTOR XN6534
Q214	8-729-117-32	s	TRANSISTOR 2SC4177
Q301	8-729-117-32	s	TRANSISTOR 2SC4177

(VA-191 BOARD)

Ref. No. or Q'ty	Part No.	SP	Description
Q302	8-729-403-29	s	TRANSISTOR XN6435
Q303	8-729-122-63	s	TRANSISTOR 2SA1226
Q304	8-729-122-63	s	TRANSISTOR 2SA1226
Q305	8-729-403-32	s	TRANSISTOR XN6534
Q306	8-729-403-32	s	TRANSISTOR XN6534
Q309	8-729-117-32	s	TRANSISTOR 2SC4177
Q313	8-729-403-32	s	TRANSISTOR XN6534
Q314	8-729-117-32	s	TRANSISTOR 2SC4177
R1	1-218-692-11	s	METAL, CHIP 1K 0.50% 1/16W
R2	1-218-740-11	s	METAL, CHIP 100K 0.50% 1/16W
R3	1-218-702-11	s	METAL, CHIP 2.7K 0.50% 1/16W
R4	1-218-724-11	s	METAL, CHIP 22K 5% 1/16W
R5	1-218-701-11	s	METAL, CHIP 2.4K 0.50% 1/16W
R6	1-218-724-11	s	METAL, CHIP 22K 5% 1/16W
R7	1-218-716-11	s	METAL, CHIP 10K 0.50% 1/16W
R9	1-218-716-11	s	METAL, CHIP 10K 0.50% 1/16W
R10	1-218-702-11	s	METAL, CHIP 2.7K 0.50% 1/16W
R11	1-218-668-11	s	METAL, CHIP 100 0.50% 1/16W
R12	1-216-857-11	s	METAL, CHIP 1M 5% 1/16W
R13	1-218-740-11	s	METAL, CHIP 100K 0.50% 1/16W
R14	1-218-740-11	s	METAL, CHIP 100K 0.50% 1/16W
R15	1-218-740-11	s	METAL, CHIP 100K 0.50% 1/16W
R16	1-218-716-11	s	METAL, CHIP 10K 0.50% 1/16W
R17	1-218-700-11	s	METAL, CHIP 2.2K 0.50% 1/16W
R18	1-218-708-11	s	METAL, CHIP 4.7K 0.50% 1/16W
R19	1-218-716-11	s	METAL, CHIP 10K 0.50% 1/16W
R20	1-218-716-11	s	METAL, CHIP 10K 0.50% 1/16W
R21	1-218-740-11	s	METAL, CHIP 100K 0.50% 1/16W
R22	1-218-740-11	s	METAL, CHIP 100K 0.50% 1/16W
R23	1-216-857-11	s	METAL, CHIP 1M 5% 1/16W
R24	1-218-716-11	s	METAL, CHIP 10K 0.50% 1/16W
R25	1-218-700-11	s	METAL, CHIP 2.2K 0.50% 1/16W
R26	1-218-692-11	s	METAL, CHIP 1K 0.50% 1/16W
R27	1-218-716-11	s	METAL, CHIP 10K 0.50% 1/16W
R28	1-218-714-11	s	METAL, CHIP 8.2K 0.50% 1/16W
R29	1-218-716-11	s	METAL, CHIP 10K 0.50% 1/16W
R30	1-218-700-11	s	METAL, CHIP 2.2K 0.50% 1/16W
R31	1-218-716-11	s	METAL, CHIP 10K 0.50% 1/16W
R32	1-218-752-11	s	METAL, CHIP 330K 0.50% 1/16W
R33	1-218-752-11	s	METAL, CHIP 330K 0.50% 1/16W
R34	1-218-752-11	s	METAL, CHIP 330K 0.50% 1/16W
R35	1-218-716-11	s	METAL, CHIP 10K 0.50% 1/16W
R36	1-218-710-91	s	METAL 5.6K 0.50% 1/16W
R37	1-218-706-11	s	METAL, CHIP 3.9K 0.50% 1/16W
R38	1-218-710-91	s	METAL 5.6K 0.50% 1/16W
R39	1-218-706-11	s	METAL, CHIP 3.9K 0.50% 1/16W
R40	1-218-710-91	s	METAL 5.6K 0.50% 1/16W
R41	1-218-706-11	s	METAL, CHIP 3.9K 0.50% 1/16W
R42	1-218-716-11	s	METAL, CHIP 10K 0.50% 1/16W
R43	1-218-724-11	s	METAL, CHIP 22K 5% 1/16W
R44	1-218-716-11	s	METAL, CHIP 10K 0.50% 1/16W
R45	1-218-708-11	s	METAL, CHIP 4.7K 0.50% 1/16W
R46	1-218-703-11	s	METAL, CHIP 3K 0.50% 1/16W
R47	1-218-740-11	s	METAL, CHIP 100K 0.50% 1/16W
R48	1-218-740-11	s	METAL, CHIP 100K 0.50% 1/16W
R49	1-218-728-11	s	METAL, CHIP 33K 0.50% 1/16W
R50	1-218-740-11	s	METAL, CHIP 100K 0.50% 1/16W
R51	1-218-740-11	s	METAL, CHIP 100K 0.50% 1/16W
R53	1-218-689-11	s	METAL, CHIP 750 0.50% 1/16W
R57	1-218-851-11	s	METAL, CHIP 1.5K 0.50% 1/16W

(VA-191 BOARD)

Ref. No. or Q'ty	Part No.	SP	Description
R58	1-218-644-11	s	METAL, CHIP 10 0.50% 1/16W
R59	1-218-644-11	s	METAL, CHIP 10 0.50% 1/16W
R60	1-218-851-11	s	METAL, CHIP 1.5K 0.50% 1/16W
R61	1-218-644-11	s	METAL, CHIP 10 0.50% 1/16W
R62	1-218-644-11	s	METAL, CHIP 10 0.50% 1/16W
R63	1-218-851-11	s	METAL, CHIP 1.5K 0.50% 1/16W
R64	1-218-644-11	s	METAL, CHIP 10 0.50% 1/16W
R65	1-218-644-11	s	METAL, CHIP 10 0.50% 1/16W
R66	1-218-668-11	s	METAL, CHIP 100 0.50% 1/16W
R67	1-218-724-11	s	METAL, CHIP 22K 5% 1/16W
R68	1-218-728-11	s	METAL, CHIP 33K 0.50% 1/16W
R69	1-218-724-11	s	METAL, CHIP 22K 5% 1/16W
R70	1-218-728-11	s	METAL, CHIP 33K 0.50% 1/16W
R71	1-218-724-11	s	METAL, CHIP 22K 5% 1/16W
R72	1-218-728-11	s	METAL, CHIP 33K 0.50% 1/16W
R73	1-218-668-11	s	METAL, CHIP 100 0.50% 1/16W
R74	1-218-740-11	s	METAL, CHIP 100K 0.50% 1/16W
R76	1-218-851-11	s	METAL, CHIP 1.5K 0.50% 1/16W
R77	1-218-851-11	s	METAL, CHIP 1.5K 0.50% 1/16W
R78	1-218-716-11	s	METAL, CHIP 10K 0.50% 1/16W
R79	1-218-716-11	s	METAL, CHIP 10K 0.50% 1/16W
R80	1-218-740-11	s	METAL, CHIP 100K 0.50% 1/16W
R81	1-218-851-11	s	METAL, CHIP 1.5K 0.50% 1/16W
R82	1-218-851-11	s	METAL, CHIP 1.5K 0.50% 1/16W
R83	1-218-851-11	s	METAL, CHIP 1.5K 0.50% 1/16W
R101	1-218-652-11	s	METAL, CHIP 22 0.50% 1/16W
R102	1-218-700-11	s	METAL, CHIP 2.2K 0.50% 1/16W
R103	1-218-668-11	s	METAL, CHIP 100 0.50% 1/16W
R104	1-218-728-11	s	METAL, CHIP 33K 0.50% 1/16W
R105	1-218-692-11	s	METAL, CHIP 1K 0.50% 1/16W
R106	1-218-851-11	s	METAL, CHIP 1.5K 0.50% 1/16W
R107*v'	1-218-701-11	s	METAL, CHIP 2.4K 0.50% 1/16W
R107*w'	1-218-699-11	s	METAL, CHIP 2K 0.50% 1/16W
R108	1-218-712-11	s	METAL, CHIP 6.8K 0.50% 1/16W
R109	1-218-710-91	s	METAL 5.6K 0.50% 1/16W
R110	1-218-710-91	s	METAL 5.6K 0.50% 1/16W
R111	1-218-747-11	s	METAL, CHIP 200K 0.50% 1/16W
R112	1-218-709-11	s	METAL, CHIP 5.1K 0.50% 1/16W
R113	1-218-716-11	s	METAL, CHIP 10K 0.50% 1/16W
R114	1-218-690-11	s	METAL, CHIP 820 0.50% 1/16W
R115	1-218-690-11	s	METAL, CHIP 820 0.50% 1/16W
R116	1-218-730-11	s	METAL, CHIP 39K 0.50% 1/16W
R117	1-218-730-11	s	METAL, CHIP 39K 0.50% 1/16W
R118	1-216-864-11	s	METAL, CHIP 0 5% 1/16W
R119	1-216-864-11	s	METAL, CHIP 0 5% 1/16W
R120	1-218-660-91	s	METAL, CHIP 47 0.50% 1/16W
R121	1-218-710-91	s	METAL 5.6K 0.50% 1/16W
R122	1-216-125-00	s	METAL, CHIP 1.5M 5% 1/10W
R124	1-218-699-11	s	METAL, CHIP 2K 0.50% 1/16W
R125	1-218-706-11	s	METAL, CHIP 3.9K 0.50% 1/16W
R126	1-218-706-11	s	METAL, CHIP 3.9K 0.50% 1/16W
R127	1-218-736-11	s	METAL, CHIP 68K 0.50% 1/16W
R128	1-218-706-11	s	METAL, CHIP 3.9K 0.50% 1/16W
R129	1-218-700-11	s	METAL, CHIP 2.2K 0.50% 1/16W
R130	1-218-851-11	s	METAL, CHIP 1.5K 0.50% 1/16W
R131	1-218-710-91	s	METAL 5.6K 0.50% 1/16W
R132	1-218-740-11	s	METAL, CHIP 100K 0.50% 1/16W
R133	1-218-716-11	s	METAL, CHIP 10K 0.50% 1/16W
R134	1-218-732-11	s	METAL, CHIP 47K 0.50% 1/16W
R135	1-218-728-11	s	METAL, CHIP 33K 0.50% 1/16W
R136	1-218-710-91	s	METAL 5.6K 0.50% 1/16W

(VA-191 BOARD)

Ref. No. or Q'ty	Part No.	SP	Description
R137	1-218-716-11	s	METAL, CHIP 10K 0.50% 1/16W
R138	1-218-644-11	s	METAL, CHIP 10 0.50% 1/16W
R139	1-218-714-11	s	METAL, CHIP 8.2K 0.50% 1/16W
R150	1-218-712-11	s	METAL, CHIP 6.8K 0.50% 1/16W
R151	1-218-706-11	s	METAL, CHIP 3.9K 0.50% 1/16W
R152	1-218-704-11	s	METAL, CHIP 3.3K 0.50% 1/16W
R153	1-218-660-91	s	METAL, CHIP 47 0.50% 1/16W
R154	1-218-668-11	s	METAL, CHIP 100 0.50% 1/16W
R155	1-218-710-91	s	METAL 5.6K 0.50% 1/16W
R156	1-218-692-11	s	METAL, CHIP 1K 0.50% 1/16W
R157	1-218-727-11	s	METAL, CHIP 30K 0.50% 1/16W
R158	1-218-720-11	s	METAL, CHIP 15K 0.50% 1/16W
R159	1-218-703-11	s	METAL, CHIP 3K 0.50% 1/16W
R160	1-218-725-11	s	METAL, CHIP 24K 0.50% 1/16W
R161	1-218-692-11	s	METAL, CHIP 1K 0.50% 1/16W
R163	1-218-652-11	s	METAL, CHIP 22 0.50% 1/16W
R164	1-218-652-11	s	METAL, CHIP 22 0.50% 1/16W
R165	1-218-700-11	s	METAL, CHIP 2.2K 0.50% 1/16W
R166	1-218-700-11	s	METAL, CHIP 2.2K 0.50% 1/16W
R167	1-218-689-11	s	METAL, CHIP 750 0.50% 1/16W
R168	1-218-710-91	s	METAL 5.6K 0.50% 1/16W
R169	1-218-668-11	s	METAL, CHIP 100 0.50% 1/16W
R201	1-218-652-11	s	METAL, CHIP 22 0.50% 1/16W
R202	1-218-700-11	s	METAL, CHIP 2.2K 0.50% 1/16W
R203	1-218-668-11	s	METAL, CHIP 100 0.50% 1/16W
R204	1-218-728-11	s	METAL, CHIP 33K 0.50% 1/16W
R205	1-218-692-11	s	METAL, CHIP 1K 0.50% 1/16W
R206	1-218-851-11	s	METAL, CHIP 1.5K 0.50% 1/16W
R207	1-218-703-11	s	METAL, CHIP 3K 0.50% 1/16W
R208	1-218-712-11	s	METAL, CHIP 6.8K 0.50% 1/16W
R209	1-218-710-91	s	METAL 5.6K 0.50% 1/16W
R210	1-218-710-91	s	METAL 5.6K 0.50% 1/16W
R211	1-218-747-11	s	METAL, CHIP 200K 0.50% 1/16W
R212	1-218-709-11	s	METAL, CHIP 5.1K 0.50% 1/16W
R213	1-218-716-11	s	METAL, CHIP 10K 0.50% 1/16W
R214	1-218-690-11	s	METAL, CHIP 820 0.50% 1/16W
R215	1-218-690-11	s	METAL, CHIP 820 0.50% 1/16W
R216	1-218-730-11	s	METAL, CHIP 39K 0.50% 1/16W
R217	1-218-730-11	s	METAL, CHIP 39K 0.50% 1/16W
R218	1-216-864-11	s	METAL, CHIP 0 5% 1/16W
R219	1-216-864-11	s	METAL, CHIP 0 5% 1/16W
R220	1-218-660-91	s	METAL, CHIP 47 0.50% 1/16W
R221	1-218-710-91	s	METAL 5.6K 0.50% 1/16W
R222	1-216-123-11	s	METAL, CHIP 1.2M 5% 1/10W
R224	1-218-699-11	s	METAL, CHIP 2K 0.50% 1/16W
R225	1-218-706-11	s	METAL, CHIP 3.9K 0.50% 1/16W
R226	1-218-706-11	s	METAL, CHIP 3.9K 0.50% 1/16W
R227	1-218-736-11	s	METAL, CHIP 68K 0.50% 1/16W
R228	1-218-706-11	s	METAL, CHIP 3.9K 0.50% 1/16W
R229	1-218-700-11	s	METAL, CHIP 2.2K 0.50% 1/16W
R230	1-218-851-11	s	METAL, CHIP 1.5K 0.50% 1/16W
R231	1-218-710-91	s	METAL 5.6K 0.50% 1/16W
R232	1-218-740-11	s	METAL, CHIP 100K 0.50% 1/16W
R233	1-218-716-11	s	METAL, CHIP 10K 0.50% 1/16W
R234	1-218-732-11	s	METAL, CHIP 47K 0.50% 1/16W
R235	1-218-728-11	s	METAL, CHIP 33K 0.50% 1/16W
R236	1-218-710-91	s	METAL 5.6K 0.50% 1/16W
R237	1-218-716-11	s	METAL, CHIP 10K 0.50% 1/16W
R238	1-218-644-11	s	METAL, CHIP 10 0.50% 1/16W
R239	1-218-714-11	s	METAL, CHIP 8.2K 0.50% 1/16W

(VA-191 BOARD)

Ref. No. or Q'ty	Part No.	SP	Description
R250	1-218-712-11	s	METAL, CHIP 6.8K 0.50% 1/16W
R251	1-218-706-11	s	METAL, CHIP 3.9K 0.50% 1/16W
R252	1-218-704-11	s	METAL, CHIP 3.3K 0.50% 1/16W
R253	1-218-660-91	s	METAL, CHIP 47 0.50% 1/16W
R254	1-218-668-11	s	METAL, CHIP 100 0.50% 1/16W
R255	1-218-710-91	s	METAL 5.6K 0.50% 1/16W
R256	1-218-692-11	s	METAL, CHIP 1K 0.50% 1/16W
R257	1-218-727-11	s	METAL, CHIP 30K 0.50% 1/16W
R258	1-218-720-11	s	METAL, CHIP 15K 0.50% 1/16W
R259	1-218-703-11	s	METAL, CHIP 3K 0.50% 1/16W
R260	1-218-725-11	s	METAL, CHIP 24K 0.50% 1/16W
R261	1-218-692-11	s	METAL, CHIP 1K 0.50% 1/16W
R263	1-218-652-11	s	METAL, CHIP 22 0.50% 1/16W
R264	1-218-652-11	s	METAL, CHIP 22 0.50% 1/16W
R265	1-218-700-11	s	METAL, CHIP 2.2K 0.50% 1/16W
R266	1-218-700-11	s	METAL, CHIP 2.2K 0.50% 1/16W
R267	1-218-689-11	s	METAL, CHIP 750 0.50% 1/16W
R268	1-218-710-91	s	METAL 5.6K 0.50% 1/16W
R269	1-218-668-11	s	METAL, CHIP 100 0.50% 1/16W
R301	1-218-652-11	s	METAL, CHIP 22 0.50% 1/16W
R302	1-218-700-11	s	METAL, CHIP 2.2K 0.50% 1/16W
R303	1-218-668-11	s	METAL, CHIP 100 0.50% 1/16W
R304	1-218-728-11	s	METAL, CHIP 33K 0.50% 1/16W
R305	1-218-692-11	s	METAL, CHIP 1K 0.50% 1/16W
R306	1-218-694-11	s	METAL, CHIP 1.2K 0.50% 1/16W
R307	1-218-692-11	s	METAL, CHIP 1K 0.50% 1/16W
R308	1-218-712-11	s	METAL, CHIP 6.8K 0.50% 1/16W
R309	1-218-710-91	s	METAL 5.6K 0.50% 1/16W
R310	1-218-710-91	s	METAL 5.6K 0.50% 1/16W
R311	1-218-744-11	s	METAL, CHIP 150K 0.50% 1/16W
R312	1-218-870-11	s	METAL, CHIP 9.1K 0.50% 1/16W
R313	1-218-710-91	s	METAL 5.6K 0.50% 1/16W
R314	1-218-690-11	s	METAL, CHIP 820 0.50% 1/16W
R315	1-218-690-11	s	METAL, CHIP 820 0.50% 1/16W
R316	1-218-730-11	s	METAL, CHIP 39K 0.50% 1/16W
R317	1-218-730-11	s	METAL, CHIP 39K 0.50% 1/16W
R318	1-216-864-11	s	METAL, CHIP 0 5% 1/16W
R319	1-216-864-11	s	METAL, CHIP 0 5% 1/16W
R320	1-218-660-91	s	METAL, CHIP 47 0.50% 1/16W
R321	1-218-710-91	s	METAL 5.6K 0.50% 1/16W
R322	1-216-129-00	s	METAL, CHIP 2.2M 5% 1/10W
R324	1-218-706-11	s	METAL, CHIP 3.9K 0.50% 1/16W
R325	1-218-706-11	s	METAL, CHIP 3.9K 0.50% 1/16W
R326	1-218-706-11	s	METAL, CHIP 3.9K 0.50% 1/16W
R327	1-218-736-11	s	METAL, CHIP 68K 0.50% 1/16W
R328	1-218-706-11	s	METAL, CHIP 3.9K 0.50% 1/16W
R329	1-218-700-11	s	METAL, CHIP 2.2K 0.50% 1/16W
R330	1-218-851-11	s	METAL, CHIP 1.5K 0.50% 1/16W
R331	1-218-710-91	s	METAL 5.6K 0.50% 1/16W
R332	1-218-740-11	s	METAL, CHIP 100K 0.50% 1/16W
R333	1-218-716-11	s	METAL, CHIP 10K 0.50% 1/16W
R334	1-218-732-11	s	METAL, CHIP 47K 0.50% 1/16W
R335	1-218-728-11	s	METAL, CHIP 33K 0.50% 1/16W
R336	1-218-710-91	s	METAL 5.6K 0.50% 1/16W
R337	1-218-716-11	s	METAL, CHIP 10K 0.50% 1/16W
R338	1-218-644-11	s	METAL, CHIP 10 0.50% 1/16W
R339	1-218-714-11	s	METAL, CHIP 8.2K 0.50% 1/16W
R350	1-218-712-11	s	METAL, CHIP 6.8K 0.50% 1/16W
R351	1-218-706-11	s	METAL, CHIP 3.9K 0.50% 1/16W
R352	1-218-704-11	s	METAL, CHIP 3.3K 0.50% 1/16W

(VA-191 BOARD)

Ref. No. or Q'ty	Part No.	SP	Description
R353	1-218-660-91	s	METAL, CHIP 47 0.50% 1/16W
R354	1-218-668-11	s	METAL, CHIP 100 0.50% 1/16W
R355	1-218-710-91	s	METAL 5.6K 0.50% 1/16W
R356	1-218-692-11	s	METAL, CHIP 1K 0.50% 1/16W
R357	1-218-727-11	s	METAL, CHIP 30K 0.50% 1/16W
R358	1-218-720-11	s	METAL, CHIP 15K 0.50% 1/16W
R359	1-218-703-11	s	METAL, CHIP 3K 0.50% 1/16W
R360	1-218-725-11	s	METAL, CHIP 24K 0.50% 1/16W
R361	1-218-692-11	s	METAL, CHIP 1K 0.50% 1/16W
R363	1-218-652-11	s	METAL, CHIP 22 0.50% 1/16W
R364	1-218-652-11	s	METAL, CHIP 22 0.50% 1/16W
R365	1-218-700-11	s	METAL, CHIP 2.2K 0.50% 1/16W
R366	1-218-700-11	s	METAL, CHIP 2.2K 0.50% 1/16W
R367	1-218-689-11	s	METAL, CHIP 750 0.50% 1/16W
R368	1-218-710-91	s	METAL 5.6K 0.50% 1/16W
R369	1-218-668-11	s	METAL, CHIP 100 0.50% 1/16W
RV101	1-237-035-11	s	RES, ADJ METAL 5K
RV201	1-237-035-11	s	RES, ADJ METAL 5K
RV301	1-237-034-11	s	RES, ADJ METAL 2K

VR-248 BOARD

Ref. No. or Q'ty	Part No.	SP	Description
1pc	A-8321-458-A	o	MOUNTED CIRCUIT BOARD, VR-248
C1	1-163-037-11	s	CERAMIC, CHIP 0.022uF 10% 25V
C2	1-163-037-11	s	CERAMIC, CHIP 0.022uF 10% 25V
C3	1-163-037-11	s	CERAMIC, CHIP 0.022uF 10% 25V
C4	1-163-038-00	s	CERAMIC, CHIP 0.1uF 25V
CN10	1-750-159-21	o	CONNECTOR, FPC 5P
CN11	1-580-789-21	o	PIN, CONNECTOR (SMD) 6P
CN15	1-569-775-21	o	PIN, CONNECTOR (SMD) 5P
CN16	1-580-756-21	o	PIN, CONNECTOR (SMD) 7P
R1	1-216-295-11	s	CONDUCTOR, CHIP 0
R2	1-216-675-11	s	METAL, CHIP 10K 0.5% 1/10W
R3	1-216-675-11	s	METAL, CHIP 10K 0.5% 1/10W
RV1	1-223-684-11	s	RES, VAR, CARBON 5K
RV3	1-223-684-11	s	RES, VAR, CARBON 5K
S1	1-570-834-11	s	SWITCH, SLIDE

VSE-32 BOARD

Ref. No. or Q'ty	Part No.	SP	Description
1pc	1-672-911-11	o	PRINTED CIRCUIT BOARD, VSE-32
C1	1-115-339-11	s	CERAMIC 0.1uF 10% 50V
C2	1-115-339-11	s	CERAMIC 0.1uF 10% 50V
C3	1-115-339-11	s	CERAMIC 0.1uF 10% 50V

1-5. Frame List

1-5-1. Harnesses/Flexible Card Wires List

Ref. No. or Q'ty	Part No.	SP	Description
HN101	1-959-400-11	o	HARNESS, SUB (MB811-DR)
			(FROM CN33/MB-811 BOARD TO CN8/DR-387 BOARD)
HN102	1-959-397-11	o	HARNESS, SUB (DR-MB811)
			(FROM CN31/MB-811 BOARD TO CN2/DR-387 BOARD)
HN103	1-959-398-11	o	HARNESS, SUB (IF716-MB811)
			(CN40/MB-811 TO CN400/IF-716 BOARD)
HN104	1-959-394-11	o	HARNESS, SUB (MB810-IF716)
(TO CN50/MB-810 BOARD)			
	1-569-621-11	o	HOUSING, CONNECTOR 12P
12pcs	1-565-977-11	s	CONTACT, FEMALE AWG#28-32
(TO CN500/IF-716 BOARD)			
	1-569-621-11	o	HOUSING, CONNECTOR 12P
12pcs	1-565-977-11	s	CONTACT, FEMALE AWG#28-32
HN105	1-959-399-11	o	HARNESS, SUB (IF716-MB810)
			(FROM CN60/MB-810 BOARD TO CN600/IF-716 BOARD)
HN106	1-959-402-11	o	HARNESS (VF)
(CN106)	1-565-051-21	o	CONNECTOR, 20P FEMAL "VF"
(TO CN23/MB-811 BOARD)			
	1-778-549-11	o	HOUSING, 20P
20pcs	1-778-554-11	o	CONTACT FEMALE AWG#28-30
HN107	1-959-006-11	o	HARNESS, SUB (MB-PSW)
(S107)	1-771-491-11	s	SWITCH, TOGGLE
(TO CN10/MB-810 BOARD)			
	1-569-617-11	o	HOUSING, CONNECTOR 2P
2pcs	1-565-977-11	s	CONTACT, FEMALE AWG#28-32
HN108	1-959-396-11	o	HARNESS, SUB (LP109-MB811)
			(FROM CN51/MB-811 BOARD TO CN101/LP-109 BOARD
HN109	1-959-395-11	o	HARNESS, SUB (SW973-MB811)
			(FROM CN32/MB-811 BOARD TO CN3/SW-973 BOARD)
HN110	1-790-583-11	s	CABLE, FLEXIBLE FLAT (45 CORE)
			(FROM CN2/CI-21 BOARD TO CN2/CI-20 BOARD)
HN111	1-790-487-11	s	CABLE, FLEXIBLE FLAT (20 CORE)
			(FROM CN21/MB-811 BOARD TO CN121/TC-101 BOARD)
HN112	1-790-486-11	s	CABLE, FLEXIBLE FLAT (30 CORE)
			(FROM CN22/MB-810 BOARD TO CN122/TC-101 BOARD)
HN113	1-790-486-11	s	CABLE, FLEXIBLE FLAT (30 CORE)
			(FROM CN23/MB-810 BOARD TO CN123/TC-101 BOARD)
HN114	1-959-392-12	o	HARNESS, SUB(PS533-LIGHT/SW973)
(FB114)	1-543-157-11	s	BEAD, FERRITE
(TO CN102/PS-533 BOARD)			
	1-562-256-11	o	HOUSING, CONNECTOR 6P
2pcs	1-562-260-11	o	CONTACT, FEMALE AWG#24-28
2pcs	3-709-106-01	o	TERMINAL, LIGHT
1pcs	3-709-107-01	o	CONNECTOR, LIGHT
1pcs	3-709-108-01	o	HOLDER
(TO CN1/SW-973 BOARD)			
	1-562-252-11	o	HOUSING, CONNECTOR 2P
2pcs	1-562-260-11	o	CONTACT, FEMALE AWG#24-28
HN115	1-959-391-11	o	HARNESS, SUB (CNB11-PS533)
(TO CN101/PS-533 BOARD)			
	1-562-254-00	o	HOUSING, 4P
	1-562-260-11	o	CONTACT, FEMALE AWG#24-28
(TO CN105/CNB-11 BOARD)			
	1-562-254-00	o	HOUSING, 4P
	1-562-260-11	o	CONTACT, FEMALE AWG#24-28
HN116	1-959-382-11	o	HARNESS, SUB (CNB11-MB811)
(TO CN109/CNB-11 BOARD)			
	1-565-169-11	o	HOUSING 7P
6pcs	1-562-260-11	o	CONTACT, FEMALE AWG#24-28
(TO CN109/MB-811 BOARD)			
	1-580-582-11	o	HOUSING, 12P
6pcs	1-573-176-11	o	CONTACT, FEMALE AWG#22-26
HN117	1-959-380-11	o	HARNESS, SUB (CNB-LP716)
			(FROM CN101/LP-111 BOARD TO CN50/CNB-11 BOARD)
HN118	1-959-393-11	o	HARNESS, SUB (CNB11-BATT IN)
(TO CN104/CNB-11 BOARD)			
	1-580-582-11	o	HOUSING, 12P
12pcs	1-573-176-11	o	CONTACT, FEMALE AWG#22-26

Ref. No. or Q'ty	Part No.	SP	Description
HN119	1-959-390-11	o	HARNESS, SUB (CNB11-DC-106)
(TO CN102/CNB-11 BOARD)			
1pc	1-580-696-11	o	HOUSING 9P
9pcs	1-562-260-11	o	CONTACT, FEMALE AWG#24-28
HN120	1-959-381-11	o	HARNESS, SUB (CNB11-DC OUT)
(CN120)	1-565-072-11	s	CONNECTOR, 4P FEMALE "DC OUT"
(TO CN103/CNB-11 BOARD)			
	1-562-252-00	o	HOUSING, 2P
2pcs	1-562-260-11	o	CONTACT, FEMALE AWG#24-28
HN121	1-959-383-11	o	HARNESS, SUB (CNB11-HP93)
(TO CN10/HP-93 BOARD)			
	1-562-253-00	o	HOUSING, 3P
2pcs	1-562-260-11	o	CONTACT, FEMALE AWG#24-28
(TO CN110/CNB-11 BOARD)			
	1-562-253-00	o	HOUSING, 3P
2pcs	1-562-260-11	o	CONTACT, FEMALE AWG#24-28
HN122	1-959-375-11	o	HARNESS, SUB (CNB11-IO178)
	(FROM CN1/IO-178 BOARD TO CN108/CNB-11 BOARD)		
HN123	1-959-370-11	o	HARNESS, SUB (RM180-CNB11)
	(FROM CN6/RM-180 BOARD TO CN35/CNB-11 BOARD)		
HN124	1-959-388-13	o	HARNESS, SUB (AUDIO POWER)
(TO CN102/AXM-11 BOARD)			
	1-569-619-11	o	HOUSING, CONNECTOR 4P
4pcs	1-565-977-11	s	CONTACT, FEMALE AWG#28-32
(TO CN106/CNB-11 BOARD)			
	1-569-619-11	o	HOUSING, CONNECTOR 4P
4pcs	1-565-977-11	s	CONTACT, FEMALE AWG#28-32
HN125	1-959-389-13	o	HARNESS, SUB (AUDIO LINE)
(TO CN101/AXM-11 BOARD)			
	1-569-521-11	o	HOUSING, CONNECTOR 11P
11pcs	1-565-977-11	s	CONTACT, FEMALE AWG#28-32
(TO CN106/CNB-11 BOARD)			
	1-569-521-11	o	HOUSING, CONNECTOR 11P
11pcs	1-565-977-11	s	CONTACT, FEMALE AWG#28-32
HN126	1-783-251-11	s	CABLE ASSEMBLY, COAXIAL
	(FROM MB-811 BOARD OR DIF-75 BOARD TO VIDEO OUT)		
HN201	1-959-379-11	o	HARNESS, SUB (MA94-IF716)
	(FROM CN30/MA-94 BOARD TO CN300/IF-716 BOARD)		
HN202	1-959-401-11	o	HARNESS (LENS)
(CN202)	1-695-841-12	s	CONNECTOR, 12P FEMALE "LENS"
(TO CN100/IF-716 BOARD)			
	1-580-583-11	o	HOUSING, 14P
12pcs	1-580-599-11	o	CONTACT, FEMALE AWG#26-30
HN203	1-959-372-11	o	HARNESS, SUB (SW971-SW983)
	(FROM CN10/SW-971 BOARD TO CN1/SW-983 BOARD)		
HN204	1-959-374-11	o	HARNESS, SUB (VR248-CP329)
	(FROM CN11/VR-248 BOARD TO CN1/CP-329 BOAR)		
HN205	1-959-378-11	o	HARNESS, SUB (TC101-VR248)
	(FROM CN16/VR-248 BOARD TO CN6/TC-101 BOARD)		
HN206	1-959-373-11	o	HARNESS, SUB (VR248-TC101)
	(FROM CN15/VR-248 BOARD TO CN5/TC-101 BOARD)		
HN207	1-959-376-11	o	HARNESS, SUB (KY293-TC101)
	(FROM CN150/KY-293 BOARD TO CN150/TC-101 BOARD)		
HN208	1-959-377-11	o	HARNESS, SUB (SW972-TC101)
	(FROM CN18/SW-972 BOARD TO CN8/TC-101 BOARD)		
HN209	1-959-371-11	o	HARNESS, SUB (HP93-TC101)
	(FROM CN1/HP-93 BOARD TO CN503/TC-101 BOARD)		
HN210	1-953-418-11	o	HARNESS, SUB (TC7-SPK)
	(TO CN7/TC-101 BOARD)		
	1-569-617-11	o	HOUSING, CONNECTOR 2P
2pcs	1-565-977-11	s	CONTACT, FEMALE AWG#28-32
HN301	1-959-384-12	o	HARNESS, SUB (VA-DCP17)
(TO CN2/VA-191 BOARD)			
	1-778-550-11	o	HOUSING, CONNECTOR 30P
30pcs	1-778-554-11	o	CONTACT FEMALE AWG#28-30
(TO CN12/DCP-17 BOARD)			
	1-778-550-11	o	HOUSING, CONNECTOR 30P
30pcs	1-778-554-11	o	CONTACT FEMALE AWG#28-30

Ref. No. or Q'ty	Part No.	SP	Description
HN302	1-959-386-11	o	HRANESS, SUB (BC-DCP17)
(TO CN1/BC-31 BOARD OR BC-32 BOARD)			
	1-778-549-11	o	HOUSING, 20P
20pcs	1-778-554-11	o	CONTACT FEMALE AWG#28-30
(TO CN13/DCP-17 BOARD)			
	1-778-549-11	o	HOUSING, 20P
20pcs	1-778-554-11	o	CONTACT FEMALE AWG#28-30
HN401	1-953-424-11	o	HARNESS, SUB (SE2-HN5)
	(FROM CN5/HN-260 BOARD TO CN2/SE-275 BOARD)		
HN402	1-953-425-11	o	HARNESS, SUB (SE1-HN6)
	(FROM CN6/HN-260 BOARD TO CN1/SE-275 BOARD)		
HN403	1-953-423-11	o	HARNESS, SUB (CTL1-HN4)
	(FROM CN4/HN-260 BOARD TO CN1/CTL-10 BOARD)		
HN404	1-953-426-11	o	HARNESS, SUB (SR1-HN8)
	(FROM CN8/HN-260 BOARD TO CN1/SR-56 BOARD(DRUM))		
HN405	1-953-409-13	o	HARNESS, SUB (DR1-HN2)
(TO CN2/HN-260 BOARD)			
	1-580-585-11	o	HOUSING, 18P
18pcs	1-580-599-11	o	CONTACT, FEMALE AWG#26-30
(TO CN1/DR-239 BOARD(DRUM))			
	1-580-585-11	o	HOUSING, 18P
18pcs	1-580-599-11	o	CONTACT, FEMALE AWG#26-30
HN406	1-953-408-12	o	HARNESS, SUB (DR2-HN1)
(TO CN1/HN-260 BOARD)			
	1-580-582-11	o	HOUSING, 12P
12pcs	1-580-599-11	o	CONTACT, FEMALE AWG#26-30
(TO CN2/DR-239 BOARD(DRUM))			
	1-580-582-11	o	HOUSING, 12P
12pcs	1-580-599-11	o	CONTACT, FEMALE AWG#26-30
HN407	1-953-420-12	o	HARNESS, SUB (DR3-HN10)
(TO CN10/HN-260 BOARD)			
	1-565-979-11	o	HOUSING, CONNECTOR 8P
7pcs	1-565-977-11	s	CONTACT, FEMALE AWG#28-32
1pc	1-766-387-11	o	CONTACT, FEMALE AWG#26-28
(TO CN3/DR-239 BOARD(DRUM))			
	1-565-979-11	o	HOUSING, CONNECTOR 8P
7pcs	1-565-977-11	s	CONTACT, FEMALE AWG#28-32
1pc	1-766-387-11	o	CONTACT, FEMALE AWG#26-28
HN408	1-953-427-11	o	HARNESS, SUB (CUE1-HN11)
	(FROM CN11/HN-260 BOARD TO CN1/CUE-2 BOARD)		
HN409	1-953-417-11	o	HARNESS, SUB (TC HEAD-HN12)
(TO CN12/HN-260 BOARD)			
	1-569-618-11	o	HOUSING, CONNECTOR 3P
	1-766-387-11	o	CONTACT, FEMALE AWG#26-28
HN410	1-953-435-11	o	HARNESS, SUB (CAP-HN14)
	(FROM CN14/HN-260 BOARD TO CAPSTAN MOTOR)		
HN411	1-953-414-11	o	HARNESS, SUB (END-SE3)
(TO CN3/SE-275 BOARD)			
	1-569-617-11	o	HOUSING, CONNECTOR 2P
2pcs	1-565-977-11	s	CONTACT, FEMALE AWG#28-32
HN412	1-953-415-11	o	HARNESS, SUB (TOP-SE4)
(TO CN4/SE-275 BOARD)			
	1-569-617-11	o	HOUSING, CONNECTOR 2P
2pcs	1-565-977-11	s	CONTACT, FEMALE AWG#28-32
HN413	1-953-412-11	o	HARNESS, SUB (CTL-HEAD)
(TO CN2/CTL-10 BOARD)			
	1-569-617-11	o	HOUSING, CONNECTOR 2P
2pcs	1-565-977-11	s	CONTACT, FEMALE AWG#28-32
HN414	1-953-411-11	o	HARNESS, SUB (FE-HEAD)
(TO CN4/CTL-10 BOARD)			
	1-569-618-11	o	HOUSING, CONNECTOR 3P
2pcs	1-565-977-11	s	CONTACT, FEMALE AWG#28-32
HN415	1-953-416-11	o	HARNESS, SUB (TM-CUE3)
(TO CN3/CUE-2 BOARD)			
	1-569-617-11	o	HOUSING, CONNECTOR 2P
2pcs	1-565-977-11	s	CONTACT, FEMALE AWG#28-32
HN416	1-953-413-11	o	HARNESS, SUB (CUE HEAD-CUE2)
(TO CN2/CUE-2 BOARD)			
	1-569-617-11	o	HOUSING, CONNECTOR 2P
	1-766-387-11	o	CONTACT, FEMALE AWG#26-28

1-5-2. External Connectors

Ref. No. or Q'ty	Part No.	SP	Description
CN1	1-766-377-12	s	CONNECTOR, BATTERY
CN3	1-766-381-11	s	CONNECTOR, BNC "GENLOCK IN"
CN4	1-766-381-11	s	CONNECTOR, BNC "TC IN"
CN5	1-766-381-11	s	CONNECTOR, BNC "TC OUT"
CN6	1-766-380-11	s	CONNECTOR, BNC "TEST OUT"
CN106	1-565-051-21	o	CONNECTOR, 20P FEMAL "VF"
CN120	1-565-072-11	s	CONNECTOR, 4P FEMALE "DC OUT"
CN126	1-784-240-11	s	CONVERTER, COAXIAL CONNECTOR "VIDEO OUT"
CN202	1-695-841-12	s	CONNECTOR, 12P FEMALE "LENS"

1-6. Supplied Accessories

Ref. No. or Q'ty	Part No.	SP	Description
1pc	A-6772-374-C	s	BELT ASSY, SHOULDER
1pc	1-542-295-11	s	MICROPHONE
1pc	3-709-104-01	s	SCREEN, WINDOW
1pc	3-725-262-03	s	COVER, RAIN [for J]
2pcs	3-741-726-01	o	CAP (2), XLR [J: 4pcs]
2pcs	3-741-727-01	o	CAP (1), XLR [except Japan]

1-7. Optional Fixtures

Part No.	SP	Description
A-8321-274-A	o	Extension Board, EX-655
A-8321-275-A	o	Extension Board, EX-656
A-8321-277-A	o	Extension Board, EX-657
A-8321-278-A	o	Extension Board, EX-658
A-8321-276-A	o	Extension Board, EX-667
J-6001-820-A	s	Drum Eccentricity Gauge (3)
J-6001-830-A	s	Drum Eccentricity Gauge (2)
J-6026-110-A	o	Multi Burst Chart
J-6026-130-B	o	Gray Scale Chart (transparent type) (4:3)
J-6394-080-A	o	Gray Scale Chart (16:9)
J-6029-140-B	o	Pattern Box PTB-500
J-6035-070-A	o	IC External Tool (CT-2101)
J-6080-840-A	s	Inspection Mirror
J-6087-000-A	s	Drum Eccentricity Gauge (5)
J-6152-450-A	s	Wire Clearance Check Gauge
J-6322-420-B	o	Tape Guide Adjustment Drier (45)
J-6322-420-3	o	TG Driver Spare Bit (45)
J-6323-530-A	o	Stop Washer Fastening Tool
J-6323-890-A	o	FWD Back Tension Measuring Cassette
J-6324-150-A	o	Reel Table Height Adjustment Tool
J-6325-110-A	o	Torque Driver Bit (for M1.4)
J-6325-380-A	o	Torque Driver Bit (for M2)
J-6325-400-A	o	Torque Driver (for 3 kg)
J-6325-530-A	o	Drum Eccentricity Gauge (6)
J-6326-120-A	o	Hexagonal Bit (1.5mm)
J-6420-840-A	o	Channel Condition Checker
J-6420-900-A	o	MB Translate Board
J-6420-910-A	o	TP Tool
J-6420-930-A	o	Extension Harness, 100 pin
J-7031-630-A	o	PG-163, 40-pin Positioning Tool
J-7032-150-A	o	PG-215, 40-pin CN Positioning
J-7032-610-B	o	Cassette Reference Plate
3-193-678-01	o	Stay
3-184-527-01	s	Cleaning Cloth
7-432-950-03	o	Sealant (TSE-392W)
7-661-018-18	s	Oil
7-651-000-11	s	Grease, SGL-801 (50 g)
7-700-736-04	s	Hexagonal Wrench (d = 2.5 mm)
7-700-736-05	s	Hexagonal Wrench (d = 1.5 mm)
7-700-736-06	s	Hexagonal Wrench (d = 0.89 mm)
8-960-073-01	o	Alignment Tape, ZR5-1(NTSC)
8-960-073-11	o	Alignment Tape, ZR2-1(NTSC)
8-960-073-51	o	Alignment Tape, ZR5-1P(PAL)
8-960-073-61	o	Alignment Tape, ZR2-1P(PAL)
9-919-573-01	s	Cleaning Fluid

Commercially ailable:
Gray Scale Chart (reflective type)(4:3)
Cleaning Tape, BCT-D12CL

1-8. BKDW-702

DIF-75 BOARD

Ref. No. or Q'ty	Part No.	SP	Description
1pc	3-616-719-02	o	PANEL, PC BOARD
6pcs	3-729-061-01	s	SCREW (M2X4.5) (TYPE 1)
1pc	3-724-753-01	o	RING
C1	1-107-826-91	s	CERAMIC 0.1uF 10% 16V
C2	1-107-826-91	s	CERAMIC 0.1uF 10% 16V
C3	1-107-826-91	s	CERAMIC 0.1uF 10% 16V
C4	1-107-826-91	s	CERAMIC 0.1uF 10% 16V
C5	1-107-826-91	s	CERAMIC 0.1uF 10% 16V
C6	1-107-826-91	s	CERAMIC 0.1uF 10% 16V
C7	1-107-826-91	s	CERAMIC 0.1uF 10% 16V
C8	1-107-826-91	s	CERAMIC 0.1uF 10% 16V
C9	1-107-826-91	s	CERAMIC 0.1uF 10% 16V
C10	1-107-826-91	s	CERAMIC 0.1uF 10% 16V
C11	1-107-826-91	s	CERAMIC 0.1uF 10% 16V
C12	1-107-826-91	s	CERAMIC 0.1uF 10% 16V
C13	1-107-826-91	s	CERAMIC 0.1uF 10% 16V
C14	1-107-826-91	s	CERAMIC 0.1uF 10% 16V
C15	1-107-826-91	s	CERAMIC 0.1uF 10% 16V
C16	1-164-230-11	s	CERAMIC 220PF 5% 50V
C17	1-107-826-91	s	CERAMIC 0.1uF 10% 16V
C18	1-107-826-91	s	CERAMIC 0.1uF 10% 16V
C19	1-107-826-91	s	CERAMIC 0.1uF 10% 16V
C20	1-107-826-91	s	CERAMIC 0.1uF 10% 16V
C21	1-162-927-11	s	CERAMIC, CHIP 100PF 5% 50V
C22	1-107-826-91	s	CERAMIC 0.1uF 10% 16V
C23	1-107-826-91	s	CERAMIC 0.1uF 10% 16V
C24	1-107-826-91	s	CERAMIC 0.1uF 10% 16V
C25	1-107-826-91	s	CERAMIC 0.1uF 10% 16V
C26	1-107-826-91	s	CERAMIC 0.1uF 10% 16V
C27	1-107-826-91	s	CERAMIC 0.1uF 10% 16V
C28	1-107-826-91	s	CERAMIC 0.1uF 10% 16V
C29	1-107-826-91	s	CERAMIC 0.1uF 10% 16V
C30	1-104-851-11	s	TANTALUM, CHIP 10uF 20% 10V
C31	1-104-913-11	s	TANTALUM, CHIP 10uF 20% 16V
C32	1-104-913-11	s	TANTALUM, CHIP 10uF 20% 16V
C33	1-107-826-91	s	CERAMIC 0.1uF 10% 16V
C34	1-113-682-11	s	TANTALUM, CHIP 33uF 20% 10V
C35	1-107-826-91	s	CERAMIC 0.1uF 10% 16V
C36	1-107-826-91	s	CERAMIC 0.1uF 10% 16V
C37	1-115-581-11	s	TANTALUM, CHIP 100uF 20% 16
C38	1-104-913-11	s	TANTALUM, CHIP 10uF 20% 16V
C39	1-107-826-91	s	CERAMIC 0.1uF 10% 16V
C40	1-115-581-11	s	TANTALUM, CHIP 100uF 20% 16
C41	1-107-826-91	s	CERAMIC 0.1uF 10% 16V
C42	1-107-826-91	s	CERAMIC 0.1uF 10% 16V
C43	1-107-826-91	s	CERAMIC 0.1uF 10% 16V
C44	1-107-826-91	s	CERAMIC 0.1uF 10% 16V
C45	1-107-826-91	s	CERAMIC 0.1uF 10% 16V
C46	1-107-826-91	s	CERAMIC 0.1uF 10% 16V
C47	1-107-826-91	s	CERAMIC 0.1uF 10% 16V
C48	1-107-826-91	s	CERAMIC 0.1uF 10% 16V
C49	1-107-826-91	s	CERAMIC 0.1uF 10% 16V
C50	1-104-851-11	s	TANTALUM, CHIP 10uF 20% 10V
C51	1-107-826-91	s	CERAMIC 0.1uF 10% 16V
C52	1-107-826-91	s	CERAMIC 0.1uF 10% 16V
C53	1-107-826-91	s	CERAMIC 0.1uF 10% 16V
C54	1-104-851-11	s	TANTALUM, CHIP 10uF 20% 10V

(DIF-75 BOARD)

Ref. No. or Q'ty	Part No.	SP	Description
C55	1-107-826-91	s	CERAMIC 0.1uF 10% 16V
C56	1-107-826-91	s	CERAMIC 0.1uF 10% 16V
C57	1-107-826-91	s	CERAMIC 0.1uF 10% 16V
C58	1-107-826-91	s	CERAMIC 0.1uF 10% 16V
C59	1-107-826-91	s	CERAMIC 0.1uF 10% 16V
C60	1-104-851-11	s	TANTALUM, CHIP 10uF 20% 10V
C61	1-107-826-91	s	CERAMIC 0.1uF 10% 16V
C62	1-107-826-91	s	CERAMIC 0.1uF 10% 16V
C63	1-107-826-91	s	CERAMIC 0.1uF 10% 16V
C64	1-107-826-91	s	CERAMIC 0.1uF 10% 16V
C65	1-107-826-91	s	CERAMIC 0.1uF 10% 16V
C66	1-162-915-11	s	CERAMIC, CHIP 10PF 50V
C67	1-107-826-91	s	CERAMIC 0.1uF 10% 16V
C68	1-107-826-91	s	CERAMIC 0.1uF 10% 16V
C69	1-107-826-91	s	CERAMIC 0.1uF 10% 16V
C70	1-107-826-91	s	CERAMIC 0.1uF 10% 16V
C71	1-107-826-91	s	CERAMIC 0.1uF 10% 16V
C72	1-107-826-91	s	CERAMIC 0.1uF 10% 16V
C73	1-107-826-91	s	CERAMIC 0.1uF 10% 16V
C74	1-104-851-11	s	TANTALUM, CHIP 10uF 20% 10V
C75	1-107-826-91	s	CERAMIC 0.1uF 10% 16V
C76	1-107-826-91	s	CERAMIC 0.1uF 10% 16V
C77	1-107-826-91	s	CERAMIC 0.1uF 10% 16V
C78	1-107-826-91	s	CERAMIC 0.1uF 10% 16V
C79	1-107-826-91	s	CERAMIC 0.1uF 10% 16V
C80	1-162-910-11	s	CERAMIC, CHIP 5PF 50V
C81	1-107-826-91	s	CERAMIC 0.1uF 10% 16V
C82	1-107-826-91	s	CERAMIC 0.1uF 10% 16V
C83	1-107-826-91	s	CERAMIC 0.1uF 10% 16V
C84	1-135-177-21	s	TANTALUM, CHIP 1uF 10% 25V
C85	1-107-826-91	s	CERAMIC 0.1uF 10% 16V
C86	1-104-913-11	s	TANTALUM, CHIP 10uF 20% 16V
C87	1-107-826-91	s	CERAMIC 0.1uF 10% 16V
C88	1-113-682-11	s	TANTALUM, CHIP 33uF 20% 10V
C89	1-107-826-91	s	CERAMIC 0.1uF 10% 16V
C90	1-107-826-91	s	CERAMIC 0.1uF 10% 16V
C91	1-107-826-91	s	CERAMIC 0.1uF 10% 16V
C92	1-107-826-91	s	CERAMIC 0.1uF 10% 16V
C94	1-162-927-11	s	CERAMIC, CHIP 100PF 5% 50V
C95	1-104-851-11	s	TANTALUM, CHIP 10uF 20% 10V
C96	1-107-826-91	s	CERAMIC 0.1uF 10% 16V
C97	1-104-913-11	s	TANTALUM, CHIP 10uF 20% 16V
C98	1-104-913-11	s	TANTALUM, CHIP 10uF 20% 16V
C99	1-104-913-11	s	TANTALUM, CHIP 10uF 20% 16V
C100	1-104-913-11	s	TANTALUM, CHIP 10uF 20% 16V
CN2	1-764-243-11	o	CONNECTOR (COAXIAL)
D1	8-719-820-41	s	DIODE 1SS302
FB200	1-543-309-21	s	BEAD, FERRITE
FB201	1-543-309-21	s	BEAD, FERRITE
FB202	1-543-309-21	s	BEAD, FERRITE
FB204	1-543-309-21	s	BEAD, FERRITE
IC1	8-759-524-50	s	IC TC74VHC541FT(EL)
IC2	8-759-524-50	s	IC TC74VHC541FT(EL)
IC3	8-759-490-41	s	IC TC74VHCT541AFT(EL)
IC4	8-759-490-41	s	IC TC74VHCT541AFT(EL)
IC5	8-759-491-46	s	IC TC74VHCT04AFT(EL)
IC6	8-759-491-46	s	IC TC74VHCT04AFT(EL)

(DIF-75 BOARD)

Ref. No. or Q'ty	Part No.	SP	Description
IC7	8-752-386-51	s	IC CXD3122R
IC8	8-752-386-51	s	IC CXD3122R
IC9	8-759-523-95	s	IC TC74VHC74FT(EL)
IC10	8-759-196-93	s	IC TC7SH00FU-TE85R
IC11	8-759-490-41	s	IC TC74VHCT541AFT(EL)
IC12	8-759-490-41	s	IC TC74VHCT541AFT(EL)
IC13	8-759-529-76	s	IC TC74VHC595FT(EL)
IC14	8-759-529-76	s	IC TC74VHC595FT(EL)
IC15	8-759-529-76	s	IC TC74VHC595FT(EL)
IC16	8-759-529-76	s	IC TC74VHC595FT(EL)
IC17	8-759-196-97	s	IC TC7SH32FU-TE85R
IC18	8-759-519-12	s	IC CXD8281Q
IC19	8-759-523-04	s	IC TC74HC4538AFT(EL)
IC20	8-759-523-95	s	IC TC74VHC74FT(EL)
IC21	8-759-172-73	s	IC CXD8385Q
IC22	8-759-524-18	s	IC TC74VHC163FT(EL)
IC23	8-759-344-84	s	IC CXD8953Q
IC24	8-759-524-50	s	IC TC74VHC541FT(EL)
IC25	8-759-524-50	s	IC TC74VHC541FT(EL)
IC26	8-759-196-96	s	IC TC7SH08FU-TE85R
IC27	8-752-078-32	s	IC CXB1341R
IC28	8-759-066-68	s	IC REF-03GS
IC29	8-759-488-34	s	IC TLV2221CDBV
IC30	8-759-082-61	s	IC TC4W53FU
IC31	8-759-082-61	s	IC TC4W53FU
IC32	8-759-463-81	s	IC TLC2272CPW-E05
IC33	8-759-054-61	s	IC CLC505AJE
IC34	8-759-529-76	s	IC TC74VHC595FT(EL)
IC35	8-759-196-96	s	IC TC7SH08FU-TE85R
L200	1-410-377-31	s	INDUCTOR, CHIP 4.7uH
L201	1-424-643-11	s	INDUCTOR 0uH
L202	1-424-643-11	s	INDUCTOR 0uH
L203	1-410-377-31	s	INDUCTOR, CHIP 4.7uH
Q1	8-729-029-14	s	TRANSISTOR DTC144EUA-T106
Q2	8-729-105-68	s	TRANSISTOR 2SC3356-K
Q3	8-729-041-24	s	TRANSISTOR NDS355AN
Q4	8-729-105-68	s	TRANSISTOR 2SC3356-K
Q5	8-729-014-93	s	TRANSISTOR 2SB1440S-TX
Q6	8-729-117-73	s	TRANSISTOR 2SC4178-F14
Q7	8-729-029-14	s	TRANSISTOR DTC144EUA-T106
Q8	8-729-105-68	s	TRANSISTOR 2SC3356-K
Q9	8-729-117-73	s	TRANSISTOR 2SC4178-F14
Q10	8-729-041-23	s	TRANSISTOR NDS356AP
Q11	8-729-204-07	s	TRANSISTOR 3SK151-S
R1	1-218-644-11	s	METAL, CHIP 10 0.50% 1/16W
R2	1-218-644-11	s	METAL, CHIP 10 0.50% 1/16W
R3	1-218-740-11	s	METAL, CHIP 100K 0.50% 1/16W
R4	1-218-740-11	s	METAL, CHIP 100K 0.50% 1/16W
R5	1-218-692-11	s	METAL, CHIP 1K 0.50% 1/16W
R6	1-218-752-11	s	METAL, CHIP 330K 0.50% 1/16W
R7	1-218-740-11	s	METAL, CHIP 100K 0.50% 1/16W
R9	1-218-660-91	s	METAL, CHIP 47 0.50% 1/16W
R10	1-218-660-91	s	METAL, CHIP 47 0.50% 1/16W
R14	1-216-864-11	s	METAL, CHIP 0 5% 1/16W
R15	1-216-864-11	s	METAL, CHIP 0 5% 1/16W
R18	1-216-864-11	s	METAL, CHIP 0 5% 1/16W
R19	1-216-864-11	s	METAL, CHIP 0 5% 1/16W
R20	1-216-864-11	s	METAL, CHIP 0 5% 1/16W

(DIF-75 BOARD)

Ref. No. or Q'ty	Part No.	SP	Description
R21	1-216-864-11	s	METAL, CHIP 0 5% 1/16W
R24	1-216-864-11	s	METAL, CHIP 0 5% 1/16W
R25	1-218-660-91	s	METAL, CHIP 47 0.50% 1/16W
R26	1-218-752-11	s	METAL, CHIP 330K 0.50% 1/16W
R27	1-218-734-11	s	METAL, CHIP 56K 5% 1/16W
R29	1-216-864-11	s	METAL, CHIP 0 5% 1/16W
R31	1-216-864-11	s	METAL, CHIP 0 5% 1/16W
R34	1-218-660-91	s	METAL, CHIP 47 0.50% 1/16W
R36	1-218-660-91	s	METAL, CHIP 47 0.50% 1/16W
R37	1-216-864-11	s	METAL, CHIP 0 5% 1/16W
R38	1-218-740-11	s	METAL, CHIP 100K 0.50% 1/16W
R39	1-218-692-11	s	METAL, CHIP 1K 0.50% 1/16W
R40	1-218-716-11	s	METAL, CHIP 10K 0.50% 1/16W
R41	1-218-716-11	s	METAL, CHIP 10K 0.50% 1/16W
R42	1-218-740-11	s	METAL, CHIP 100K 0.50% 1/16W
R43	1-218-700-11	s	METAL, CHIP 2.2K 0.50% 1/16W
R44	1-218-700-11	s	METAL, CHIP 2.2K 0.50% 1/16W
R45	1-218-700-11	s	METAL, CHIP 2.2K 0.50% 1/16W
R46	1-218-700-11	s	METAL, CHIP 2.2K 0.50% 1/16W
R47	1-218-851-11	s	METAL, CHIP 1.5K 0.50% 1/16W
R48	1-218-718-11	s	METAL, CHIP 12K 0.50% 1/16W
R49	1-218-740-11	s	METAL, CHIP 100K 0.50% 1/16W
R50	1-216-864-11	s	METAL, CHIP 0 5% 1/16W
R51	1-218-752-11	s	METAL, CHIP 330K 0.50% 1/16W
R52	1-218-692-11	s	METAL, CHIP 1K 0.50% 1/16W
R53	1-218-728-11	s	METAL, CHIP 33K 0.50% 1/16W
R54	1-218-710-91	s	METAL 5.6K 0.50% 1/16W
R55	1-218-716-11	s	METAL, CHIP 10K 0.50% 1/16W
R56	1-218-722-11	s	METAL, CHIP 18K 0.50% 1/16W
R57	1-218-851-11	s	METAL, CHIP 1.5K 0.50% 1/16W
R59	1-218-678-11	s	METAL, CHIP 270 0.50% 1/16W
R60	1-218-678-11	s	METAL, CHIP 270 0.50% 1/16W
R61	1-218-716-11	s	METAL, CHIP 10K 0.50% 1/16W
R62	1-218-692-11	s	METAL, CHIP 1K 0.50% 1/16W
R63	1-216-627-11	s	METAL, CHIP 100 0.50% 1/10W
R64	1-218-668-11	s	METAL, CHIP 100 0.50% 1/16W
R65	1-216-617-11	s	METAL, CHIP 39 0.50% 1/10W
R66	1-216-627-11	s	METAL, CHIP 100 0.50% 1/10W
R67	1-216-617-11	s	METAL, CHIP 39 0.50% 1/10W
R68	1-216-611-11	s	METAL, CHIP 22 0.50% 1/10W
R69	1-218-706-11	s	METAL, CHIP 3.9K 0.50% 1/16W
R70	1-218-700-11	s	METAL, CHIP 2.2K 0.50% 1/16W
R71	1-218-660-91	s	METAL, CHIP 47 0.50% 1/16W
R72	1-216-624-11	s	METAL, CHIP 75 0.50% 1/10W
R73	1-216-864-11	s	METAL, CHIP 0 5% 1/16W
R74	1-218-728-11	s	METAL, CHIP 33K 0.50% 1/16W
R75	1-218-668-11	s	METAL, CHIP 100 0.50% 1/16W
R76	1-216-623-11	s	METAL, CHIP 68 0.50% 1/10W
R77	1-218-724-11	s	METAL, CHIP 22K 5% 1/16W
R78	1-218-724-11	s	METAL, CHIP 22K 5% 1/16W
R79	1-218-692-11	s	METAL, CHIP 1K 0.50% 1/16W
R80	1-218-644-11	s	METAL, CHIP 10 0.50% 1/16W
R81	1-218-692-11	s	METAL, CHIP 1K 0.50% 1/16W
R82	1-218-752-11	s	METAL, CHIP 330K 0.50% 1/16W
R83	1-218-748-11	s	METAL, CHIP 220K 0.50% 1/16W
R84	1-218-716-11	s	METAL, CHIP 10K 0.50% 1/16W
R85	1-218-716-11	s	METAL, CHIP 10K 0.50% 1/16W
R86	1-216-624-11	s	METAL, CHIP 75 0.50% 1/10W
R87	1-216-624-11	s	METAL, CHIP 75 0.50% 1/10W

(DIF-75 BOARD)

Ref. No. or Q'ty	Part No.	SP	Description
R90	1-216-864-11	s	METAL, CHIP 0 5% 1/16W
R91	1-218-724-11	s	METAL, CHIP 22K 5% 1/16W
R92	1-218-740-11	s	METAL, CHIP 100K 0.50% 1/16W
R93	1-218-740-11	s	METAL, CHIP 100K 0.50% 1/16W
RB1	1-239-409-11	s	RESISTOR BLOCK, CHIP 47X4
RB2	1-239-409-11	s	RESISTOR BLOCK, CHIP 47X4
RB3	1-239-409-11	s	RESISTOR BLOCK, CHIP 47X4
RB4	1-239-409-11	s	RESISTOR BLOCK, CHIP 47X4
RB5	1-239-409-11	s	RESISTOR BLOCK, CHIP 47X4
RB6	1-239-409-11	s	RESISTOR BLOCK, CHIP 47X4
RB7	1-236-907-11	s	RESISTOR BLOCK, CHIP 100KX4
RB8	1-236-907-11	s	RESISTOR BLOCK, CHIP 100KX4
RB9	1-236-907-11	s	RESISTOR BLOCK, CHIP 100KX4
RB10	1-236-907-11	s	RESISTOR BLOCK, CHIP 100KX4
RB11	1-236-907-11	s	RESISTOR BLOCK, CHIP 100KX4
RB12	1-236-907-11	s	RESISTOR BLOCK, CHIP 100KX4
RB13	1-239-412-11	s	NETWORK RESISTOR (CHIP) 100
RB14	1-239-412-11	s	NETWORK RESISTOR (CHIP) 100
RB15	1-239-412-11	s	NETWORK RESISTOR (CHIP) 100
RB16	1-236-907-11	s	RESISTOR BLOCK, CHIP 100KX4
RB17	1-236-907-11	s	RESISTOR BLOCK, CHIP 100KX4
RB18	1-236-907-11	s	RESISTOR BLOCK, CHIP 100KX4
RB19	1-236-907-11	s	RESISTOR BLOCK, CHIP 100KX4
RB20	1-236-907-11	s	RESISTOR BLOCK, CHIP 100KX4
RV1	1-241-260-11	s	RES, ADJ, METAL 500
S1	1-692-881-41	s	SWITCH, SLIDE

1-9. BKDW-703

```
-----------
MY-93 BOARD
-----------
Note
*x': Serial No.10056 and higher (707 SY)
               30011 and higher (707 J)
               10106 and higher (709WS SY)
               30006 and higher (709WS J/790WS J)
               10091 and higher (790WS SY)
               40121 and higher (707P)
               40191 and higher (709WSP)
               40336 and higher (790WSP)
*y': Serial No.10001 through 10055 (707 SY)
               30001 through 30010 (707 J)
               10001 through 10105 (709WS SY)
               30001 through 30005 (709WS J/790WS J)
               10001 through 10090 (790WS SY)
               40001 through 40120 (707P)
               40001 through 40190 (709WSP)
               40001 through 40335 (790WSP)
*z': Serial No.10056 and higher (707 SY)
               30011 and higher (707 J)
               10116 and higher (709WS SY)
               30006 and higher (709WS J/790WS J)
               10106 and higher (790WS SY)
               40121 and higher (707P)
               40206 and higher (709WSP)
               40391 and higher (790WSP)
```

Ref. No. or Q'ty	Part No.	SP	Description
C1	1-162-919-11	s	CERAMIC, CHIP 22PF 5% 50V
C2	1-164-156-11	s	CERAMIC, CHIP 0.1uF 25V
C3	1-164-156-11	s	CERAMIC, CHIP 0.1uF 25V
C4	1-164-156-11	s	CERAMIC, CHIP 0.1uF 25V
C5	1-162-915-11	s	CERAMIC, CHIP 10PF 50V
C6	1-164-156-11	s	CERAMIC, CHIP 0.1uF 25V
C7	1-162-919-11	s	CERAMIC, CHIP 22PF 5% 50V
C8	1-162-919-11	s	CERAMIC, CHIP 22PF 5% 50V
C10	1-162-921-11	s	CERAMIC, CHIP 33PF 5% 50V
C11	1-162-919-11	s	CERAMIC, CHIP 22PF 5% 50V
C12	1-162-915-11	s	CERAMIC, CHIP 10PF 50V
C13	1-164-156-11	s	CERAMIC, CHIP 0.1uF 25V
C14	1-164-156-11	s	CERAMIC, CHIP 0.1uF 25V
C15	1-162-919-11	s	CERAMIC, CHIP 22PF 5% 50V
C16	1-164-156-11	s	CERAMIC, CHIP 0.1uF 25V
C17	1-164-156-11	s	CERAMIC, CHIP 0.1uF 25V
C18	1-164-156-11	s	CERAMIC, CHIP 0.1uF 25V
C19	1-164-156-11	s	CERAMIC, CHIP 0.1uF 25V
C20	1-164-156-11	s	CERAMIC, CHIP 0.1uF 25V
C21	1-164-156-11	s	CERAMIC, CHIP 0.1uF 25V
C22	1-164-156-11	s	CERAMIC, CHIP 0.1uF 25V
C23	1-164-156-11	s	CERAMIC, CHIP 0.1uF 25V
C24	1-164-156-11	s	CERAMIC, CHIP 0.1uF 25V
C25	1-164-156-11	s	CERAMIC, CHIP 0.1uF 25V
C26	1-164-156-11	s	CERAMIC, CHIP 0.1uF 25V
C27	1-164-156-11	s	CERAMIC, CHIP 0.1uF 25V
C28	1-164-156-11	s	CERAMIC, CHIP 0.1uF 25V
C29	1-164-156-11	s	CERAMIC, CHIP 0.1uF 25V
C30	1-164-156-11	s	CERAMIC, CHIP 0.1uF 25V
C31	1-164-156-11	s	CERAMIC, CHIP 0.1uF 25V
C32	1-164-156-11	s	CERAMIC, CHIP 0.1uF 25V
C33	1-164-156-11	s	CERAMIC, CHIP 0.1uF 25V
C34	1-162-919-11	s	CERAMIC, CHIP 22PF 5% 50V
C36	1-162-919-11	s	CERAMIC, CHIP 22PF 5% 50V
C37	1-162-919-11	s	CERAMIC, CHIP 22PF 5% 50V
C38	1-164-156-11	s	CERAMIC, CHIP 0.1uF 25V
C39	1-164-156-11	s	CERAMIC, CHIP 0.1uF 25V

(MY-93 BOARD)

Ref. No. or Q'ty	Part No.	SP	Description
C40	1-164-156-11	s	CERAMIC, CHIP 0.1uF 25V
C41	1-164-156-11	s	CERAMIC, CHIP 0.1uF 25V
C42	1-162-919-11	s	CERAMIC, CHIP 22PF 5% 50V
C43	1-164-156-11	s	CERAMIC, CHIP 0.1uF 25V
C44	1-164-156-11	s	CERAMIC, CHIP 0.1uF 25V
C45	1-164-156-11	s	CERAMIC, CHIP 0.1uF 25V
C46	1-164-156-11	s	CERAMIC, CHIP 0.1uF 25V
C47	1-164-156-11	s	CERAMIC, CHIP 0.1uF 25V
C48	1-164-156-11	s	CERAMIC, CHIP 0.1uF 25V
C49	1-164-156-11	s	CERAMIC, CHIP 0.1uF 25V
C50	1-164-156-11	s	CERAMIC, CHIP 0.1uF 25V
C51	1-164-230-11	s	CERAMIC 220PF 5% 50V
C52	1-164-230-11	s	CERAMIC 220PF 5% 50V
C54	1-162-921-11	s	CERAMIC, CHIP 33PF 5% 50V
C55	1-162-921-11	s	CERAMIC, CHIP 33PF 5% 50V
C56	1-162-921-11	s	CERAMIC, CHIP 33PF 5% 50V
CN1	1-784-241-21	o	CONNECTOR, BOARD TO BOARD 30P
CN2	1-784-241-21	o	CONNECTOR, BOARD TO BOARD 30P
D1	8-719-820-41	s	DIODE 1SS302
IC1	8-759-524-18	s	IC TC74VHC163FT(EL)
IC2	8-759-523-94	s	IC TC74VHC32FT(EL)
IC3	8-759-523-81	s	IC TC74VHC08FT(EL)
IC4	8-759-524-52	s	IC TC74VHC574FT(EL)
IC5	8-759-531-92	s	IC TC7WH04FU(TE12R)
IC6	8-759-447-77	s	IC TC7WH74FU(TE12R)
IC7	8-759-271-84	s	IC TC7SH02FU
IC8	8-759-523-81	s	IC TC74VHC08FT(EL)
IC9	8-759-523-79	s	IC TC74VHC02FT(EL)
IC10	8-759-531-92	s	IC TC7WH04FU(TE12R)
IC11	8-759-271-84	s	IC TC7SH02FU
IC12	8-759-524-08	s	IC TC74VHC139FT(EL)
IC13	8-759-196-96	s	IC TC7SH08FU-TE85R
IC14	8-759-196-97	s	IC TC7SH32FU-TE85R
IC15	8-759-271-84	s	IC TC7SH02FU
IC16	8-759-196-97	s	IC TC7SH32FU-TE85R
IC17	8-759-524-29	s	IC TC74VHC257FT(EL)
IC18	8-759-524-29	s	IC TC74VHC257FT(EL)
IC19	8-759-530-31	s	IC TC74VHC4040FT(EL)
IC20	8-759-530-31	s	IC TC74VHC4040FT(EL)
IC21	8-759-524-29	s	IC TC74VHC257FT(EL)
IC22	8-759-524-29	s	IC TC74VHC257FT(EL)
IC23	8-759-524-29	s	IC TC74VHC257FT(EL)
IC24	8-759-523-95	s	IC TC74VHC74FT(EL)
IC25	8-759-447-77	s	IC TC7WH74FU(TE12R)
IC26	8-759-524-26	s	IC TC74VHC240FT(EL)
IC27	8-759-271-84	s	IC TC7SH02FU
IC28	8-759-524-48	s	IC TC74VHC393FT(EL)
IC29	8-759-196-97	s	IC TC7SH32FU-TE85R
IC30	8-759-529-76	s	IC TC74VHC595FT(EL)
IC31	8-759-529-76	s	IC TC74VHC595FT(EL)
IC32	8-759-196-93	s	IC TC7SH00FU-TE85R
IC33	8-759-196-96	s	IC TC7SH08FU-TE85R
IC34	8-759-524-18	s	IC TC74VHC163FT(EL)
IC35	8-759-447-77	s	IC TC7WH74FU(TE12R)
IC36	8-759-529-76	s	IC TC74VHC595FT(EL)
IC37	8-752-386-51	s	IC CXD3122R
IC38	8-759-524-31	s	IC TC74VHC299FT(EL)
IC39	8-759-497-44	s	IC TC7WH125FU(TE12R)

(MY-93 BOARD)

Ref. No. or Q'ty	Part No.	SP	Description
IC40	8-759-524-50	s	IC TC74VHC541FT(EL)
IC41	8-759-196-96	s	IC TC7SH08FU-TE85R
IC42	8-759-523-83	s	IC TC74VHC11FT(EL)
IC43	8-759-524-18	s	IC TC74VHC163FT(EL)
IC44	8-759-524-18	s	IC TC74VHC163FT(EL)
IC45	8-752-386-51	s	IC CXD3122R
IC46	8-759-524-25	o	IC TC7WH241FU(TE12R)
IC47	8-759-524-22	s	IC TC74VHC175FT(EL)
IC48	8-759-524-26	s	IC TC74VHC240FT(EL)
IC49	8-759-459-41	s	IC TMS4C2973-26DTR
IC50*x'	8-759-665-85	s	IC KM48V8104CS-L6T
IC50*y'	8-759-571-47	s	IC KM48V8104BS-L6T
IC51*x'	8-759-665-85	s	IC KM48V8104CS-L6T
IC51*y'	8-759-571-47	s	IC KM48V8104BS-L6T
IC52*x'	8-759-665-85	s	IC KM48V8104CS-L6T
IC52*y'	8-759-571-47	s	IC KM48V8104BS-L6T
IC53*x'	8-759-665-85	s	IC KM48V8104CS-L6T
IC53*y'	8-759-571-47	s	IC KM48V8104BS-L6T
IC54*x'	8-759-665-85	s	IC KM48V8104CS-L6T
IC54*y'	8-759-571-47	s	IC KM48V8104BS-L6T
IC55*x'	8-759-665-85	s	IC KM48V8104CS-L6T
IC55*y'	8-759-571-47	s	IC KM48V8104BS-L6T
IC56*x'	8-759-665-85	s	IC KM48V8104CS-L6T
IC56*y'	8-759-571-47	s	IC KM48V8104BS-L6T
IC57*x'	8-759-665-85	s	IC KM48V8104CS-L6T
IC57*y'	8-759-571-47	s	IC KM48V8104BS-L6T
IC58*x'	8-759-665-85	s	IC KM48V8104CS-L6T
IC58*y'	8-759-571-47	s	IC KM48V8104BS-L6T
IC59*x'	8-759-665-85	s	IC KM48V8104CS-L6T
IC59*y'	8-759-571-47	s	IC KM48V8104BS-L6T
IC60*x'	8-759-665-85	s	IC KM48V8104CS-L6T
IC60*y'	8-759-571-47	s	IC KM48V8104BS-L6T
IC61*x'	8-759-665-85	s	IC KM48V8104CS-L6T
IC61*y'	8-759-571-47	s	IC KM48V8104BS-L6T
IC62*x'	8-759-665-85	s	IC KM48V8104CS-L6T
IC62*y'	8-759-571-47	s	IC KM48V8104BS-L6T
IC63*x'	8-759-665-85	s	IC KM48V8104CS-L6T
IC63*y'	8-759-571-47	s	IC KM48V8104BS-L6T
IC64*x'	8-759-665-85	s	IC KM48V8104CS-L6T
IC64*y'	8-759-571-47	s	IC KM48V8104BS-L6T
IC65*x'	8-759-665-85	s	IC KM48V8104CS-L6T
IC65*y'	8-759-571-47	s	IC KM48V8104BS-L6T
IC66*x'	8-759-665-85	s	IC KM48V8104CS-L6T
IC66*y'	8-759-571-47	s	IC KM48V8104BS-L6T
IC67*x'	8-759-665-85	s	IC KM48V8104CS-L6T
IC67*y'	8-759-571-47	s	IC KM48V8104BS-L6T
IC68	8-759-524-22	s	IC TC74VHC175FT(EL)
IC69	8-759-277-63	s	IC TC7W14FU(TE12R)
IC70	8-759-524-52	s	IC TC74VHC574FT(EL)
IC71	8-759-524-52	s	IC TC74VHC574FT(EL)
IC72	8-759-524-52	s	IC TC74VHC574FT(EL)
IC73	8-759-524-52	s	IC TC74VHC574FT(EL)
IC74	8-759-271-86	s	IC TC7SH04FU
IC75	8-759-459-41	s	IC TMS4C2973-26DTR
IC76	8-759-530-31	s	IC TC74VHC4040FT(EL)
IC77	8-759-447-77	s	IC TC7WH74FU(TE12R)
IC78	8-759-196-96	s	IC TC7SH08FU-TE85R
IC79	8-759-271-84	s	IC TC7SH02FU
IC80	8-759-524-52	s	IC TC74VHC574FT(EL)
IC81	8-759-524-52	s	IC TC74VHC574FT(EL)
IC82	8-759-524-52	s	IC TC74VHC574FT(EL)
IC83	8-759-524-52	s	IC TC74VHC574FT(EL)
IC84	8-759-196-96	s	IC TC7SH08FU-TE85R

(MY-93 BOARD)

Ref. No. or Q'ty	Part No.	SP	Description
IC85	8-759-524-09	s	IC TC74VHC153FT(EL)
IC86	8-759-523-94	s	IC TC74VHC32FT(EL)
IC87	8-759-196-97	s	IC TC7SH32FU-TE85R
IC88*z'	8-759-524-25	o	IC TC7WH241FU (TE12R)
R1	1-218-660-91	s	METAL, CHIP 47 0.50% 1/16W
R2	1-218-660-91	s	METAL, CHIP 47 0.50% 1/16W
R3	1-218-652-11	s	METAL, CHIP 22 0.50% 1/16W
R4	1-218-660-91	s	METAL, CHIP 47 0.50% 1/16W
R5	1-218-668-11	s	METAL, CHIP 100 0.50% 1/16W
R6	1-218-668-11	s	METAL, CHIP 100 0.50% 1/16W
R7	1-218-680-11	s	METAL, CHIP 330 0.50% 1/16W
R8	1-218-692-11	s	METAL, CHIP 1K 0.50% 1/16W
R9	1-216-864-11	s	METAL, CHIP 0 5% 1/16W
R10	1-218-680-11	s	METAL, CHIP 330 0.50% 1/16W
R12	1-218-684-11	s	METAL, CHIP 470 0.50% 1/16W
R13	1-218-680-11	s	METAL, CHIP 330 0.50% 1/16W
R18	1-216-864-11	s	METAL, CHIP 0 5% 1/16W
R19	1-216-864-11	s	METAL, CHIP 0 5% 1/16W
R20	1-216-864-11	s	METAL, CHIP 0 5% 1/16W
R21	1-216-864-11	s	METAL, CHIP 0 5% 1/16W
R23	1-218-676-11	s	METAL, CHIP 220 0.50% 1/16W
R24	1-218-652-11	s	METAL, CHIP 22 0.50% 1/16W
R25	1-218-716-11	s	METAL, CHIP 10K 0.50% 1/16W
R46	1-218-682-11	s	METAL, CHIP 390 0.50% 1/16W
R128	1-218-678-11	s	METAL, CHIP 270 0.50% 1/16W
R129	1-218-668-11	s	METAL, CHIP 100 0.50% 1/16W
R130	1-218-678-11	s	METAL, CHIP 270 0.50% 1/16W
R131	1-218-676-11	s	METAL, CHIP 220 0.50% 1/16W
R141	1-218-660-91	s	METAL, CHIP 47 0.50% 1/16W
R142	1-218-660-91	s	METAL, CHIP 47 0.50% 1/16W
R147	1-218-652-11	s	METAL, CHIP 22 0.50% 1/16W
R150	1-218-652-11	s	METAL, CHIP 22 0.50% 1/16W
R151	1-218-652-11	s	METAL, CHIP 22 0.50% 1/16W
R154	1-218-676-11	s	METAL, CHIP 220 0.50% 1/16W
R174	1-218-684-11	s	METAL, CHIP 470 0.50% 1/16W
R176	1-218-692-11	s	METAL, CHIP 1K 0.50% 1/16W
R177	1-218-692-11	s	METAL, CHIP 1K 0.50% 1/16W
R180	1-218-716-11	s	METAL, CHIP 10K 0.50% 1/16W
R181	1-218-732-11	s	METAL, CHIP 47K 0.50% 1/16W
R182	1-218-660-91	s	METAL, CHIP 47 0.50% 1/16W
R183	1-218-660-91	s	METAL, CHIP 47 0.50% 1/16W
RB1	1-239-436-11	s	RESISTOR BLOCK, CHIP 33KX4
RB2	1-239-409-11	s	RESISTOR BLOCK, CHIP 47X4
RB3	1-239-409-11	s	RESISTOR BLOCK, CHIP 47X4
RB4	1-239-409-11	s	RESISTOR BLOCK, CHIP 47X4
RB5	1-239-409-11	s	RESISTOR BLOCK, CHIP 47X4
RB6	1-239-409-11	s	RESISTOR BLOCK, CHIP 47X4
RB7	1-236-904-11	s	RESISTOR BLOCK, CHIP 1KX4
RB9	1-239-436-11	s	RESISTOR BLOCK, CHIP 33KX4
RB10	1-236-904-11	s	RESISTOR BLOCK, CHIP 1KX4

1-10. BKDW-704

FM-65 BOARD

Ref. No. or Q'ty	Part No.	SP	Description
C1	1-164-156-11	s	CERAMIC, CHIP 0.1uF 25V
C2	1-164-156-11	s	CERAMIC, CHIP 0.1uF 25V
C3	1-162-964-11	s	CERAMIC, CHIP 0.001uF 10% 50V
C4	1-164-156-11	s	CERAMIC, CHIP 0.1uF 25V
C5	1-164-156-11	s	CERAMIC, CHIP 0.1uF 25V
C6	1-164-156-11	s	CERAMIC, CHIP 0.1uF 25V
C7	1-164-156-11	s	CERAMIC, CHIP 0.1uF 25V
C9	1-162-915-11	s	CERAMIC, CHIP 10PF 50V
C17	1-164-156-11	s	CERAMIC, CHIP 0.1uF 25V
C18	1-164-156-11	s	CERAMIC, CHIP 0.1uF 25V
C19	1-164-156-11	s	CERAMIC, CHIP 0.1uF 25V
C21	1-164-156-11	s	CERAMIC, CHIP 0.1uF 25V
C22	1-164-156-11	s	CERAMIC, CHIP 0.1uF 25V
C27	1-164-156-11	s	CERAMIC, CHIP 0.1uF 25V
C29	1-164-156-11	s	CERAMIC, CHIP 0.1uF 25V
C30	1-164-156-11	s	CERAMIC, CHIP 0.1uF 25V
C101	1-164-156-11	s	CERAMIC, CHIP 0.1uF 25V
C102	1-164-156-11	s	CERAMIC, CHIP 0.1uF 25V
C104	1-164-156-11	s	CERAMIC, CHIP 0.1uF 25V
C201	1-164-156-11	s	CERAMIC, CHIP 0.1uF 25V
C204	1-164-156-11	s	CERAMIC, CHIP 0.1uF 25V
C301	1-164-156-11	s	CERAMIC, CHIP 0.1uF 25V
C302	1-164-156-11	s	CERAMIC, CHIP 0.1uF 25V
C304	1-164-156-11	s	CERAMIC, CHIP 0.1uF 25V
CN1	1-779-393-11	o	CONNECTOR, BOARD TO BOARD 100P
IC1	8-759-524-18	s	IC TC74VHC163FT(EL)
IC2	8-759-524-18	s	IC TC74VHC163FT(EL)
IC3	8-759-524-18	s	IC TC74VHC163FT(EL)
IC4	8-759-524-18	s	IC TC74VHC163FT(EL)
IC5	8-759-524-18	s	IC TC74VHC163FT(EL)
IC6	8-759-524-18	s	IC TC74VHC163FT(EL)
IC7	8-759-523-96	s	IC TC74VHC86FT(EL)
IC8	8-759-523-96	s	IC TC74VHC86FT(EL)
IC9	8-759-524-22	s	IC TC74VHC175FT(EL)
IC10	8-759-531-92	s	IC TC7WH04FU(TE12R)
IC11	8-759-196-96	s	IC TC7SH08FU-TE85R
IC12	8-759-523-94	s	IC TC74VHC32FT(EL)
IC15	8-759-523-94	s	IC TC74VHC32FT(EL)
IC16	8-759-196-96	s	IC TC7SH08FU-TE85R
IC17	8-752-386-51	s	IC CXD3122R
IC18	8-759-523-95	s	IC TC74VHC74FT(EL)
IC19	8-759-524-29	s	IC TC74VHC257FT(EL)
IC20	8-759-447-77	s	IC TC7WH74FU(TE12R)
IC23	8-759-524-29	s	IC TC74VHC257FT(EL)
IC24	8-759-523-95	s	IC TC74VHC74FT(EL)
IC28	8-759-523-96	s	IC TC74VHC86FT(EL)
IC30	8-759-529-76	s	IC TC74VHC595FT(EL)
IC32	8-759-524-52	s	IC TC74VHC574FT(EL)
IC33	8-759-524-52	s	IC TC74VHC574FT(EL)
IC34	8-759-524-52	s	IC TC74VHC574FT(EL)
IC35	8-759-524-52	s	IC TC74VHC574FT(EL)
IC36	8-759-524-52	s	IC TC74VHC574FT(EL)
IC37	8-759-524-51	s	IC TC74VHC573FT(EL)
IC38	8-759-524-51	s	IC TC74VHC573FT(EL)
IC39	8-759-524-51	s	IC TC74VHC573FT(EL)
IC40	8-759-524-51	s	IC TC74VHC573FT(EL)

(FM-65 BOARD)

Ref. No. or Q'ty	Part No.	SP	Description
IC41	8-759-524-51	s	IC TC74VHC573FT(EL)
IC42	8-759-524-52	s	IC TC74VHC574FT(EL)
IC101	8-759-541-30	s	IC KM416V4104BS-L6
IC102	8-759-541-30	s	IC KM416V4104BS-L6
IC201	8-759-541-30	s	IC KM416V4104BS-L6
IC202	8-759-541-30	s	IC KM416V4104BS-L6
IC301	8-759-541-30	s	IC KM416V4104BS-L6
IC302	8-759-541-30	s	IC KM416V4104BS-L6
R2	1-218-644-11	s	METAL, CHIP 10 0.50% 1/16W
R4	1-218-660-91	s	METAL, CHIP 47 0.50% 1/16W
R7	1-218-684-11	s	METAL, CHIP 470 0.50% 1/16W
R10	1-218-740-11	s	METAL, CHIP 100K 0.50% 1/16W
R19	1-218-660-91	s	METAL, CHIP 47 0.50% 1/16W
R49	1-218-644-11	s	METAL, CHIP 10 0.50% 1/16W
R51	1-218-644-11	s	METAL, CHIP 10 0.50% 1/16W
R52	1-216-864-11	s	METAL, CHIP 0 5% 1/16W
RB1	1-239-436-11	s	RESISTOR BLOCK, CHIP 33KX4

Section 2
Semiconductor Pin Assignments

ここに記載されている半導体は，それぞれの機能を等価的に表したものです。 なお，互換性のない型名を併記していることがありますので，部品を交換するときは，Spare Partsの章を参照してください。
等価回路はICメーカーのデータブックに従いました。

Semiconductors of which functions are equivalent are described here. For parts replacement, refer to the section of Spare Parts in this manual. The circuit diagram of each IC is obtained from the IC data book published by the manufacturer.

DIODE Page

1S2835-T1 2-4
1S2836 2-4
1S2837-T1 2-4
1SS123-T1 2-4
1SS184 2-4
1SS226 2-4
1SS300-TE85L 2-4
1SS301-TE85L 2-4
1SS302 2-4
1SS302-TE85L 2-4

DA204U 2-4
DA204UT106 2-4
DAN202U 2-4
DAN202UT106 2-4
DAP202U 2-4
DAP202UT106 2-4

EA60QC06-TE16F2 2-4
EC10QS-04 2-4
EC10QS04-TE12L5 2-4

HSM107S 2-4
HSM107S-TL 2-4
HSM88AS-TL 2-4
HSM88WA 2-4
HSM88WA-TL 2-4

MA141WK 2-4
MA721WA-TX 2-4
MBRS130LT3 2-4

RD10M-B2 2-4
RD10M-T1B 2-4
RD15M-B1 2-4
RD15M-T1B1 2-4
RD2.4M-B 2-4
RD2.4M-T1B 2-4
RD2.4UH-T1 2-4
RD3.0UH-T1 2-4
RD3.3UH(1)-T1 2-4
RD3.3UH-T1 2-4
RD4.3M-B 2-4
RD4.3M-T1B 2-4
RD4.3UH-T1 2-4
RD6.2M-B 2-4
RD6.2M-T1B 2-4
RD6.8M-T1B 2-4

SB01-05CP 2-4

DIODE Page

SB01-05CP-TB 2-4
SB01-15CP 2-4
SB01-15CP-TB 2-4
SB05-05CP 2-4
SB05-05CP-TB 2-4
SB07-03C 2-4
SB07-03C-TB 2-4
SB20-03P 2-4
SB20-03P-TD 2-4

LED Page

CL-150R-CD 2-4
CL-150R-CD-T 2-4
CL-150UR-CD-T 2-4
CL-200HR-C-TSL 2-4
CL-200HR-C-TUL 2-4

GL3UR8 2-4

TRANSISTOR Page

2SA1162G 2-4
2SA1226-E4 2-4
2SA1226-T1E3E4 2-4
2SA1314C-TE12L 2-4
2SA1330-06 2-4
2SA1330-T1O6 2-4
2SA1462 2-4
2SA1462-T1Y33Y34 2-4
2SA1610-T1Y34 2-4
2SA1610-Y33 2-4
2SA1611-M5M6 2-4
2SA1611T1-M5M6 2-4
2SA812-T1-M5M6 2-4
2SB1114-T1ZLZK 2-4
2SB1121-ST 2-4
2SB1440S-TX 2-4
2SB624-BV345 2-4
2SB624-T1BV4 2-4
2SB798-DL 2-4
2SB798-T1-DLDK 2-4
2SC1623 2-4
2SC1623-T1-L5L6 2-4
2SC2713-G 2-4
2SC2713G-TE85L 2-4
2SC2982C-TE12L 2-4
2SC3356-K 2-4
2SC3356-T1K 2-4
2SC3360-N16 2-4
2SC3360-T1N16 2-4
2SC3735-L-B35 2-4
2SC3735-T1B-B34 2-4
2SC4116-YG 2-4
2SC4116YG-TE85L 2-4
2SC4176-B34 2-4
2SC4176-B35 2-4
2SC4176-T1B35 2-4
2SC4176T1B33B34B35 ... 2-4
2SC4177-L6 2-4
2SC4177-T1L5L6 2-4
2SC4178-F13F14-T1 2-4
2SC4178-F14 2-4
2SC4207-YGRTE85L 2-5
2SC4213-AB-TE85L 2-4
2SC4213-B 2-4
2SC4213B-TE85L 2-4
2SD1614-T1XL 2-4
2SD1624-T 2-4
2SD1624-T-TD 2-4
2SD596DV345 2-4
2SD596T1-DV345 2-4

TRANSISTOR Page

2SJ106-Y 2-5
2SJ106Y-TE85L 2-5
2SJ187 2-5
2SJ187-TD 2-5
2SJ244JY-TL 2-5
2SK1579DY-TL 2-5
2SK208-GR-TE85L 2-5
2SK508-T1K53 2-5
2SK536-TB 2-5
2SK620 2-5
2SK620-TX 2-5
2SK711-BL 2-5
2SK711-BL/V-TE85L 2-5
2SK852-T1X2 2-5
2SK852-X2 2-5
2SK853-K5 2-5
2SK853-T1K5 2-5
2SK94-T1X2 2-5
2SK94-X4 2-5
3SK151-S 2-5
3SK151S-TE85L 2-5

DTA144EKA-T146 2-5
DTA144EUA-T106 2-5
DTA144WKA-T146 2-4
DTB143EK 2-5
DTB143EK-T-146 2-5
DTC114TKA-T146 2-5
DTC144EKA 2-5
DTC144EKA-T146 2-5
DTC144EUA-T106 2-5
DTC144EUT106 2-5
DTD143EK 2-5
DTD143EK-T-146 2-5

MTD20N03HDL 2-5
MTD20N03HDL-T4 2-5

NDS355AN 2-5
NDS356AP 2-5

SI4410DY-T1-REVA 2-5
SI4435DY-T1-REVA 2-5
SI4532DY-T1 2-5
SI4953DY-T1 2-5
SI9435DY-T1 2-5
SI9936DY 2-5
SI9936DY-T1 2-5
SI9958DY 2-5
SI9958DY-T1 2-5

Index

TRANSISTOR **Page**

XN6401 2-5
XN6401-TW 2-5
XN6435 2-5
XN6435-TW 2-5
XN6501 2-5
XN6501-TW 2-5
XN6534 2-5
XN6534-TW 2-5

OTHERS **Page**

GP1S33 2-6
GP2S07B 2-6

HCPL-0630-500 2-6

M-30 2-6

IC **Page**

74LCX541MTCX 2-6
74LCX574MTCX 2-6
74LVX4245QSCX 2-7

ADS805E-T2 2-7
AK5352-VF-E2 2-8
AM26C31CDB-E05 2-7
AT27C512R-15RC 2-8

BA6285FP-E2 2-9
BR9020 2-7
BR9020F-E2 2-7

CLC505AJE 2-8
CLC505AJE-T 2-8
CX22017 2-11
CX22017-TH 2-11
CXA1439M 2-9
CXA1439M-TH 2-9
CXA1486Q-TH 2-9
CXA3051R 2-10
CXA3053R 2-11
CXA3229R 2-10
CXB1341R 2-12
CXD1095AR 2-12
CXD1265R 2-13
CXD1265R-T6 2-13
CXD2306Q 2-14
CXD2307R-T6 2-14
CXD2422R 2-15
CXD306-138Q 2-16
CXD3122R 2-17
CXD3122R-T4 2-17
CXD606-101R 2-18
CXD8095Q 2-19
CXD8281Q 2-24
CXD8384Q 2-20
CXD8385Q 2-22
CXD8806R 2-25
CXD8807BR 2-26
CXD8815Q 2-27
CXD8820AR 2-28
CXD8821Q 2-29
CXD8854Q 2-15
CXD8889R 2-17
CXD8928R 2-30
CXD8929R 2-31
CXD8933AR 2-32
CXD8934AR 2-33
CXD8953Q 2-34
CXK1203AR 2-35
CXK1203AR-T4 2-35
CXK48324R 2-35
CXK48324R-1 2-35

DS1302Z-TE2 2-36

EL4581CS-TE2 2-36

HD151015T 2-36

IC **Page**

HD151015TEL 2-36
HD6417032F20 2-38
HD6433308RC69F 2-37
HD6473308RF10 2-37
HM62W9127HJP-35 2-36
HM62W9127HJP-35Z 2-36

IDT71V124S15Y-TL 2-40

KM416V4104BS-L6 2-40
KM48V8104BS-L6T 2-40

LA7205M 2-41
LA7205M-TE-L 2-41
LC35256DT-70-TLM 2-41
LM2903PW-E05 2-41
LM358PW 2-41
LM358PW-E05 2-41
LM35DM 2-41
LM35DMX 2-41

M5201FP 2-42
M5201FP-600D 2-42
M62352GP 2-42
M62352GP-75ED 2-42
MAX202CSE 2-42
MAX202CSE-T 2-42
MAX703CSA-TE2 2-43
MB3761PF-ER 2-42
MB3793-42PNF 2-43
MB3793-42PNF-ER 2-43
MB88346BPFV 2-43
MB88346BPFV-EF 2-43
MB88351PFV 2-44
MB88351PFV-ER 2-44
MBM29F040C-90PD 2-43
MC14094BF 2-44
MC14094BFEL 2-44
MC34151DR2 2-44

NJM082BM(TE2) 2-44
NJM082M 2-44
NJM2041M-D 2-44
NJM2041M-D(TE2) 2-44
NJM2903M 2-41
NJM2903M-TE2 2-41
NJM2904V(TE2) 2-41
NJM3403AM 2-45
NJM3403AM(TE2) 2-45
NJM386M(TE2) 2-45
NJM431U 2-45
NJM431U-TE1 2-45
NJM4562D-D 2-44
NJM4565M-A 2-44
NJM4565M-A(TE2) 2-44
NJU7021V-TE2 2-45
NJU7024M 2-45
NJU7024V-TE2 2-45
NJU7034V-TE2 2-45

IC **Page**

PCF8574T-T 2-45
PCM1716E-BT2 2-46

REF-03GSR 2-46
RH5VL25AA-T1 2-46
RH5VL40AA-T1 2-46

S-80740AN-D4-S 2-46
S-80740AN-D4-T1 2-46
S-81230SGUP-DQB-T1 ...2-46
S-81240SGUP-DQJ-T1 . 2-46
S-875045CUP-ACA-T2 .. 2-47
SN74CBT16212DGGR .. 2-47
SN74HC00ANS 2-47
SN74HC00ANS-E05 2-47
SN74HC04APW-E05 2-47
SN74HC04APW-E20 2-47
SN74HC08APW-E05 2-47
SN74HC10APW-E05 2-47
SN74HC164APW-E05 ... 2-48
SN74HC32APW-E05 2-48
SN74HC574APW-E05 2-6
SN74HC574APW-E20 2-6
SN74HCT04APW-E05 ... 2-47
SN74HCT244APW-E05 . 2-48
SN74HCT541APW-E05 ... 2-6
SN74LS123NS 2-48
SN74LS123NS-E05 2-48
SN74LV04APWR 2-47
SN74LVC821APW-E05 .. 2-49
SSM-2142P 2-48
STK14C88-N45I 2-49

TC4053BFT(EL,N) 2-48
TC4066BFT(EL,N) 2-49
TC4S01F 2-50
TC4S01F(TE85R) 2-50
TC4S30F 2-50
TC4S30F(TE85R) 2-50
TC4S66F 2-50
TC4S66F(TE85R) 2-50
TC4S81F(TE85R) 2-50
TC4SU69F 2-50
TC4SU69F(TE85R) 2-50
TC4W53FU 2-50
TC4W53FU(TE12R) 2-50
TC74AC86F 2-50
TC74HC4052AFT(EL) ... 2-50
TC74HC4053AFT(EL) ... 2-51
TC74HC4538AFT(EL) ... 2-51
TC74VHC00FT(EL) 2-47
TC74VHC02FT(EL) 2-51
TC74VHC04FT(EL) 2-47
TC74VHC08FT(EL) 2-47
TC74VHC10FT(EL) 2-47
TC74VHC11FT(EL) 2-51
TC74VHC123AFT(EL) ... 2-51
TC74VHC125FT(EL) 2-51
TC74VHC138FT(EL) 2-52
TC74VHC139FT(EL) 2-52

IC	Page
TC74VHC153FT(EL)	2-52
TC74VHC157FT(EL)	2-52
TC74VHC161FT(EL)	2-52
TC74VHC163FT(EL)	2-53
TC74VHC164FT(EL)	2-48
TC74VHC175FT(EL)	2-52
TC74VHC240FT(EL)	2-53
TC74VHC244FT(EL)	2-48
TC74VHC245FT(EL)	2-53
TC74VHC257FT(EL)	2-53
TC74VHC299FT(EL)	2-54
TC74VHC32FT(EL)	2-48
TC74VHC393FT(EL)	2-53
TC74VHC4040FT(EL)	2-54
TC74VHC541FT(EL)	2-6
TC74VHC573FT(EL)	2-55
TC74VHC574FT(EL)	2-6
TC74VHC595FT(EL)	2-55
TC74VHC74FT(EL)	2-55
TC74VHC86FT(EL)	2-50
TC74VHCT00AFT(EL)	2-47
TC74VHCT04AFT(EL)	2-47
TC74VHCT08AFT(EL)	2-47
TC74VHCT541AFT(EL)	2-6
TC74VHCU04FT(EL)	2-47
TC7S00FU(TE85R)	2-55
TC7S02FU(TE85R)	2-50
TC7S02FU-TE85L	2-50
TC7S04FU(TE85R)	2-50
TC7S08F	2-50
TC7S08F(TE85R)	2-50
TC7S08FU(TE85R)	2-50
TC7S14F	2-55
TC7S14F(TE85R)	2-55
TC7S14FU(TE85R)	2-55
TC7S32FU(TE85R)	2-55
TC7S66FU	2-50
TC7S66FU(TE85R)	2-50
TC7S86FU	2-50
TC7S86FU(TE85R)	2-50
TC7SET08F(TE85L)	2-50
TC7SET08FU(TE85R)	2-50
TC7SH00FU-TE85R	2-55
TC7SH02FU	2-50
TC7SH02FU-TE85R	2-50
TC7SH04FU	2-50
TC7SH04FU-TE85R	2-50
TC7SH08FU-TE85R	2-50
TC7SH32FU-TE85R	2-55
TC7SH86FU-TE85R	2-50
TC7W00FU	2-55
TC7W00FU(TE12R)	2-55
TC7W02F	2-56
TC7W02FU(TE12R)	2-56
TC7W04FU	2-56
TC7W04FU(TE12R)	2-56
TC7W08FU	2-56
TC7W08FU(TE12R)	2-56
TC7W14FU(TE12R)	2-56
TC7W32FU	2-56
TC7W32FU(TE12R)	2-56
TC7W74FU	2-56
TC7W74FU(TE12R)	2-56
TC7WH04FU(TE12R)	2-56
TC7WH125FU(TE12R)	2-56
TC7WH157FU(TE12R)	2-56
TC7WH241FU(TE12R)	2-58
TC7WH74FU(TR12R)	2-56
TC7WU04FU(TE12R)	2-56
TE7751	2-57
TL054CDB-E05	2-58
TL062CPW	2-44
TL062CPW-E05	2-44
TL064CPW	2-58
TL064CPW-E05	2-58
TL072CPS	2-44
TL072CPS-E05	2-44
TL074CPW	2-58
TL074CPW-E05	2-58
TL082CPW-E05	2-44
TL084CPW-E05	2-58
TL084CPW-E20	2-58
TL1451ACPW-E05	2-58
TL5001CD	2-58
TL5001CDR	2-58
TLC2272CPW-E05	2-58
TLC272CPS	2-59
TLC272CPS-E05	2-59
TLC272CPW-E05	2-59
TLC274CPW	2-59
TLC274CPW-E05	2-59
TLC2932IPW	2-59
TLC2932IPW-E05	2-59
TLV2221CDBV	2-59
TMS4C2973-26DTR	2-60
TSC426C0A	2-59
TSC426C0A-T2	2-59
UPC1663G	2-59
UPC1663G-E2	2-59
UPC311G2	2-60
UPC311G2-E2	2-60
UPC4572G2-E2	2-41
UPD16502GS(1)	2-60
UPD16502GS(1)-E2	2-60
UPD42280GU-30	2-61
UPD434008ALLE-A20	2-60
UPD4702G	2-62
UPD4991AGS	2-61
UPD4991AGS-E2	2-61
UPD6456GS-620-E2	2-62
UPD6466GS-515	2-63
UPD71055GB-10-3B4	2-64
UPD72002GB-11-3B4	2-65
WS57C256F-55C-(A)	2-64
X24164SIT1	2-64
X24645S8T2	2-64
X24C02S-T1	2-66
X24C16SI	2-66
X24C16SI-C7000	2-66
XRD7523AID-JTR	2-66

Diode, LED, Transistor

DIODE

—TOP VIEW—

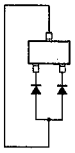

1S2835-T1
1S2836
1SS300-TE85L
DAP202U
DAP202UT106
HSM88WA
HSM88WA-TL
MA721WA-TX

—TOP VIEW—

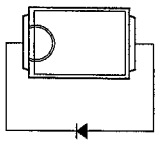

MBRS130LT3

—TOP VIEW—

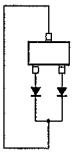

1S2837-T1
1SS184
1SS301-TE85L
DAN202U
DAN202UT106
MA141WK

—TOP VIEW—

RD10M-B2
RD10M-T1B
RD15M-B1
RD15M-T1B1
RD2.4M-B
RD2.4M-T1B
RD4.3M-B
RD4.3M-T1B
RD6.2M-B
RD6.2M-T1B
RD6.8M-T1B

—TOP VIEW—

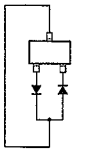

1SS123-T1
1SS226
1SS302
1SS302-TE85L
DA204U
DA204UT106
HSM107S
HSM107S-TL
HSM88AS-TL

—TOP VIEW—

RD2.4UH-T1
RD3.0UH-T1
RD3.3UH(1)-T1
RD3.3UH-T1
RD4.3UH-T1

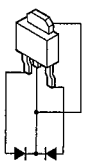

EA60QC06-TE16F2

—TOP VIEW—

SB01-05CP
SB01-05CP-TB
SB01-15CP
SB01-15CP-TB
SB05-05CP
SB05-05CP-TB
SB07-03C
SB07-03C-TB

EC10QS-04
EC10QS04-TE12L5

—TOP VIEW—

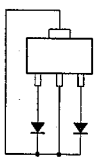

SB20-03P
SB20-03P-TD

LED

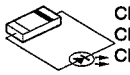

CL-150R-CD
CL-150R-CD-T
CL-150UR-CD-T

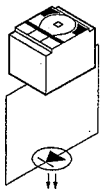

CL-200HR-C-TSL
CL-200HR-C-TUL

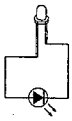

GL3UR8

TRANSISTOR

—TOP VIEW—

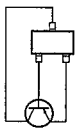

2SA1162G
2SA1226-E4
2SA1226-T1E3E4
2SA1330-06
2SA1330-T1O6
2SA1462
2SA1462-T1Y33Y34
2SA1610-T1Y34
2SA1610-Y33
2SA1611-M5M6
2SA1611T1-M5M6
2SA812-T1-M5M6
2SB624-BV345
2SB624-T1BV4

—TOP VIEW—

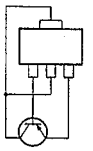

2SA1314C-TE12L
2SB1114-T1ZLZK
2SB1121-ST
2SB1440S-TX
2SB798-DL
2SB798-T1-DLDK

—TOP VIEW—

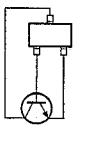

2SC1623
2SC1623-T1-L5L6
2SC2713-G
2SC2713G-TE85L
2SC3356-K
2SC3356-T1K
2SC3360-N16
2SC3360-T1N16
2SC3735-L-B35
2SC3735-T1B-B34
2SC4116-YG
2SC4116YG-TE85L
2SC4176-B34
2SC4176-B35
2SC4176-T1B35
2SC4176T1B33B34B35
2SC4177-L6
2SC4177-T1L5L6
2SC4178-F13F14-T1
2SC4178-F14
2SC4213-AB-TE85L
2SC4213-B
2SC4213B-TE85L
2SD596DV345
2SD596T1-DV345

—TOP VIEW—

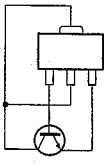

2SC2982C-TE12L
2SD1614-T1XL
2SD1624-T
2SD1624-T-TD

—TOP VIEW—

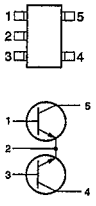

2SC4207-YGRTE85L

—TOP VIEW—

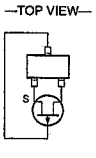

2SJ106-Y
2SJ106Y-TE85L

—TOP VIEW—

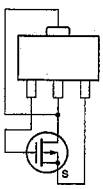

2SJ187
2SJ187-TD
2SJ244JY-TL

—TOP VIEW—

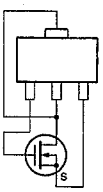

2SK1579DY-TL

—TOP VIEW—

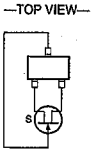

2SK208-GR-TE85L
2SK508-T1K53
2SK711-BL
2SK711-BL/V-TE85L
2SK852-T1X2
2SK852-X2
2SK853-K5
2SK853-T1K5
2SK94-T1X2
2SK94-X4

—TOP VIEW—

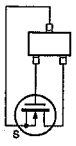

2SK536-TB

—TOP VIEW—

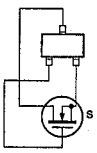

2SK620
2SK620-TX
NDS355AN

(WIDE)

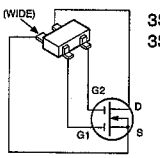

3SK151-S
3SK151S-TE85L

—TOP VIEW—

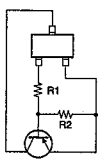

DTA144EKA-T146
(R1=47k,R2=47k)
DTA144EUA-T106
(R1=47k,R2=47k)
DTA144WKA-T146
(R1=47k,R2=22k)
DTB143EK
(R1=4.7k,R2=4.7k)
DTB143EK-T-146

—TOP VIEW—

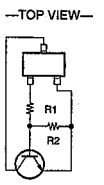

DTC114TKA-T146
(R1=10k,R2=OPEN)
DTC144EKA
(R1=47k,R2=47k)
DTC144EKA-T146
DTC144EUA-T106
(R1=47k,R2=47k)
DTC144EUT106
DTD143EK
(R1=4.7k,R2=4.7k)
DTD143EK-T-146

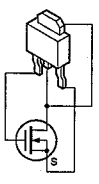

MTD20N03HDL
MTD20N03HDL-T4

—TOP VIEW—

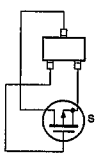

NDS356AP

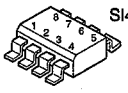

SI4410DY-T1-REVA

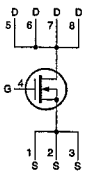

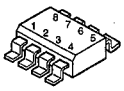

SI4435DY-T1-REVA
SI9435DY-T1

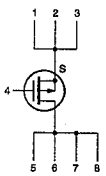

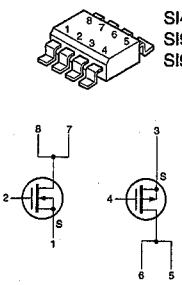

SI4532DY-T1
SI9958DY
SI9958DY-T1

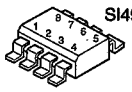

SI4953DY-T1

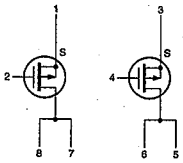

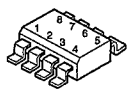

SI9936DY
SI9936DY-T1

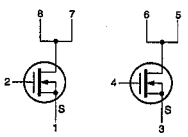

—TOP VIEW—

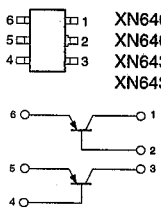

XN6401
XN6401-TW
XN6435
XN6435-TW

—TOP VIEW—

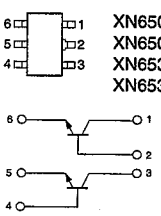

XN6501
XN6501-TW
XN6534
XN6534-TW

Others, IC

OTHERS

GP1S33

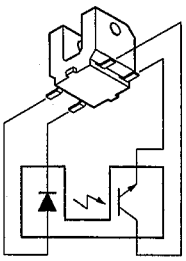

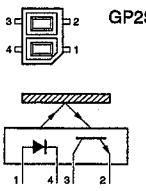

GP2S07B

—TOP VIEW—

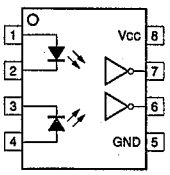

HCPL-0630-500

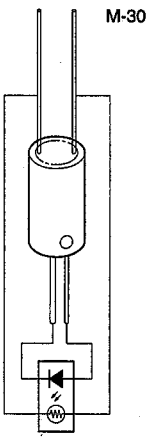

M-30

IC

74LCX541MTCX (NS)
SN74HCT541APW-E05 (TI)
TC74VHC541FT(EL) (TOSHIBA)
TC74VHCT541AFT(EL) (TOSHIBA)

OCTAL BUS BUFFER WITH 3-STATE OUTPUTS
—TOP VIEW—

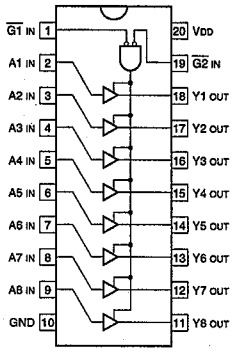

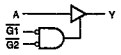

G1	G2	A	Y
0	0	0	0
0	0	1	1
1	×	×	HI-Z
×	1	×	HI-Z

0 : LOW LEVEL
1 : HIGH LEVEL
× : DON'T CARE
HI-Z : HIGH IMPEDANCE

74LCX574MTCX (NS)
SN74HC574APW-E05
SN74HC574APW-E20 (TI)
TC74VHC574FT(EL) (TOSHIBA)

C-MOS 3-STATE D-TYPE EDGE-TRIGGERED FLIP-FLOP
—TOP VIEW—

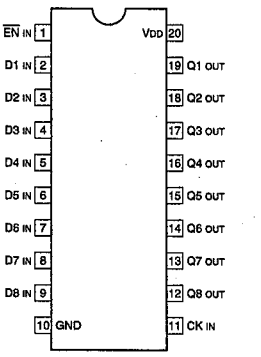

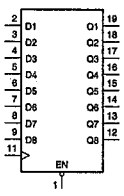

EACH FLIP-FLOP

INPUTS			OUT
EN	CK	D	Q
0	↑	1	1
0	↑	0	0
0	↓	×	Q0
1	×	×	HI-Z

0 : LOW LEVEL
1 : HIGH LEVEL
× : DON'T CARE
HI-Z : HIGH IMPEDANCE
Q0 : NONSTABLE

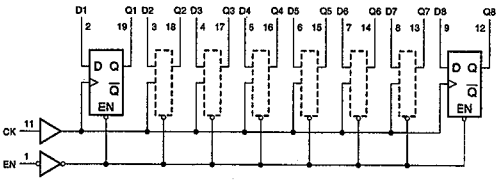

74LVX4245QSCX (NS)

C-MOS 8-BIT DUAL SUPPLY VOLTAGE TRANSLATING TRANSCEIVER
—TOP VIEW—

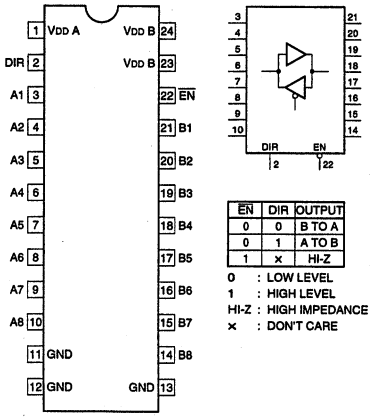

EN	DIR	OUTPUT
0	0	B TO A
0	1	A TO B
1	×	HI-Z

0 : LOW LEVEL
1 : HIGH LEVEL
HI-Z : HIGH IMPEDANCE
× : DON'T CARE

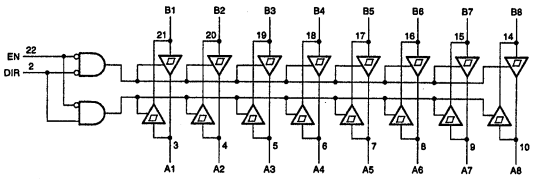

ADS805E-T2 (BURR-BROWN)

C-MOS 12-BIT A/D CONVERTER
—TOP VIEW—

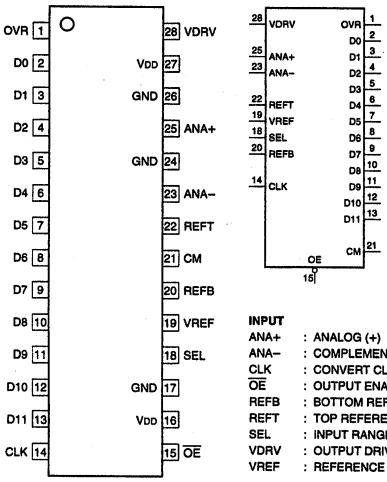

INPUT
ANA+ : ANALOG (+)
ANA– : COMPLEMENTARY ANALOG
CLK : CONVERT CLOCK
$\overline{OE}$: OUTPUT ENABLE
REFB : BOTTOM REFERENCE VOLTAGE
REFT : TOP REFERENCE VOLTAGE
SEL : INPUT RANGE SELECT
VDRV : OUTPUT DRIVER VOLTAGE
VREF : REFERENCE VOLTAGE SELECT

OUTPUT
CM : COMMON MODE VOLTAGE
D0 - D11 : DATA BIT
OVR : OVER RANGE INDICATOR

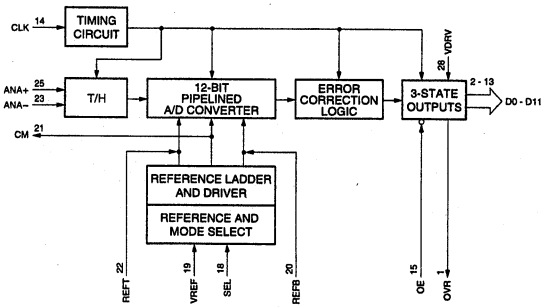

BR9020 (ROHM)
BR9020F-E2 (ROHM)

2K (128x16)-BIT SERIAL EEPROM
—TOP VIEW—

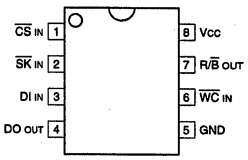

INPUTS
$\overline{CS}$: CHIP SELECT
DI : OPERAND CODE, ADDRESS, AND SREIAL DATA
$\overline{SK}$: SERIAL DATA CLOCK
$\overline{WC}$: WRITE CONTROL

OUTPUTS
DO : SERIAL DATA
R/$\overline{B}$: READY/$\overline{BUSY}$ STATUS SIGNAL

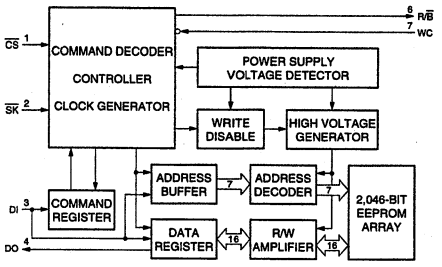

AM26C31CDB-E05 (TI)

C-MOS QUAD DIFFERENTIAL LINE DRIVER
—TOP VIEW—

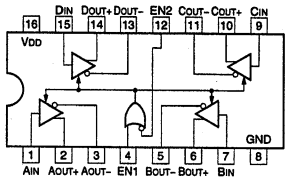

INPUTS			OUTPUTS	
EN2	EN1	IN	+	–
1	0	×	HI-Z	HI-Z
ALL OTHER COMBINATIONS OF ENABLE INPUTS		L	L	H
		H	H	L

0 : LOW LEVEL
1 : HIGH LEVEL
× : DON'T CARE
HI-Z : HIGH IMPEDANCE

AK5352-VF-E2 (ASAHI)

C-MOS 20-BIT A/D CONVERTER
—TOP VIEW—

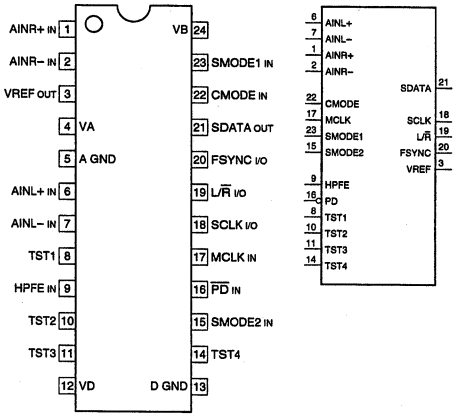

INPUT

AINL+	:	CHANNEL L ANALOG POSITIVE INPUT
AINL–	:	CHANNEL L ANALOG NEGATIVE INPUT
AINR+	:	CHANNEL R ANALOG POSITIVE INPUT
AINR–	:	CHANNEL R ANALOG NEGATIVE INPUT
CMODE	:	MASTER CLOCK SELECT (L : MCLK = 256 fs) (H : MCLK = 384 fs)
HPFE	:	HIGH PASS FILTER ENABLE (L : OFF) (H : ON)
MCLK	:	MASTER CLOCK (CMODE = H : 384 fs) (CMODE = L : 256 fs)
$\overline{PD}$	:	POWER DOWN (L : POWER DOWN MODE)
SMODE1, SMODE2	:	INTERFACE CLOCK SELECT

SMODE1	SMODE2	MODE	LRCK
L	L	SUB MODE	H/L
H	L	MASTER MODE	H/L
L	H	SUB MODE	L/H
H	H	MASTER MODE	L/H

OUTPUT

SDATA	:	SERIAL DATA
VREF	:	REFERENCE VOLTAGE

INPUT/OUTPUT

FSYNC	:	FRAME SYNC CLOCK
L/$\overline{R}$	:	INPUT CHANNEL SELECT (SUB MODE : fs CLK INPUT) (MASTER MODE : fs CLK OUTPUT)
SCLK	:	SERIAL DATA CLOCK (SUB MODE : 64 fs CLK INPUT) (MASTER MODE : 64 fs CLK OUTPUT)

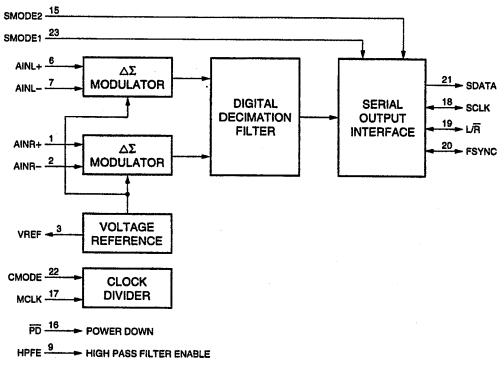

AT27C512R-15RC (ATMEL)

C-MOS 512 K (65,536 × 8) UV-EPROM
—TOP VIEW—

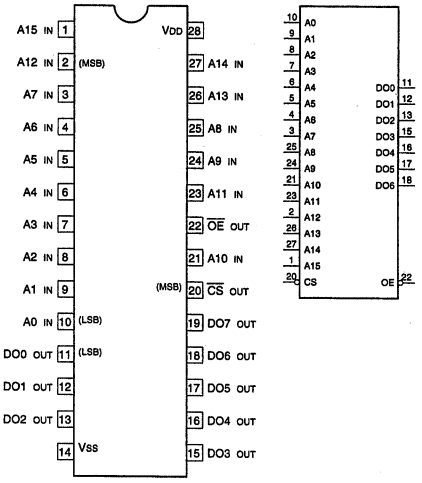

INPUT		DO	OPERATION
$\overline{CS}$	$\overline{OE}$		
1	x	HIGH-Z	STAND BY
0	1	HIGH-Z	OPERATING
0	0	DO	OPERATING

0 : LOW LEVEL
1 : HIGH LEVEL
× : LOW OR HIGH LEVEL

INPUT

A0 - A15	:	ADDRESS INPUTS
$\overline{CS}$	:	CHIP SELECT

OUTPUT

DO0 - DO7	:	DATA OUTPUTS
$\overline{OE}$	:	OUTPUT ENABLE

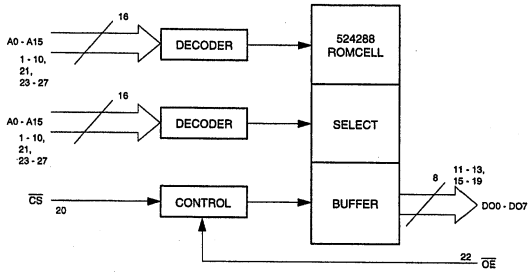

CLC505AJE (COMLINEAR)
CLC505AJE-T

OPERATIONAL AMPLIFIER
—TOP VIEW—

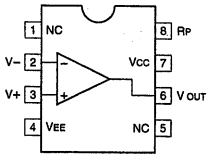

BA6285FP-E2 (ROHM)

BIPOLA POSSIBLE REVERSE MOTOR DRIVER
—TOP VIEW—

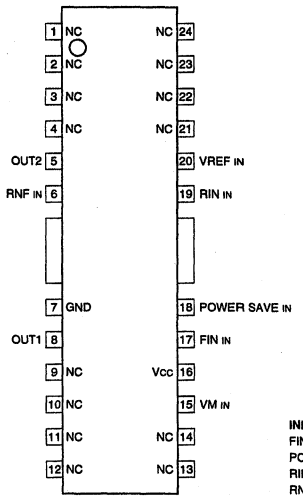

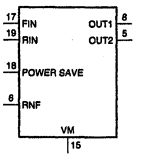

FIN	RIN	OUT2	OUT1	MODE
H	L	L	H	NORMAL MODE
L	H	H	L	REVERSE MODE
H	H	L	L	BRAKE MODE
L	L	OPEN	OPEN	STAND BY MODE

INPUT
FIN : MODE SELECTION
POWER SAVE : POWER SAVE SWITCH
RIN : MODE SELECTION
RNF : OUTPUT BLOCK GROUND
OUTPUT CURRENT DETECTION
RESISTOR CONNECTION
VREF : REFERENCE VOLTAGE SETTING
VM : POWER SUPPLY FOR MOTOR

OUTPUT
OUT1, OUT2 : MOTOR DRIVE SIGNAL

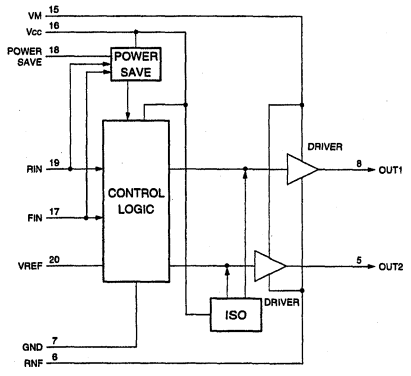

CXA1439M (SONY)
CXA1439M-TH

CORRELATED DOUBLE SAMPLING
—TOP VIEW—

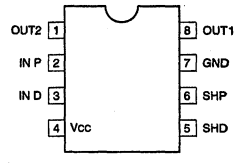

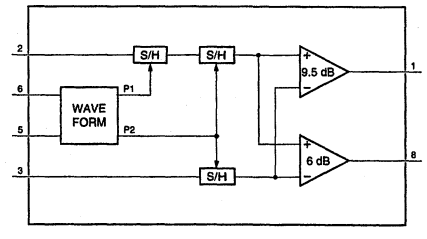

CXA1486Q-TH (SONY)

VIDEO AMPLIFIER FOR VIDEO CAMERA
—TOP VIEW—

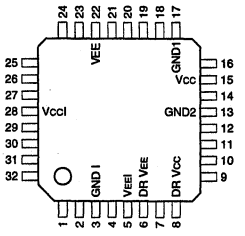

PIN No.	I/O	SIGNAL	PIN No.	I/O	SIGNAL
1	I	OUT SW	17	—	GND1
2	I	W SHAD	18	I	SIG IN
3	—	GND I	19	I	GS2
4	I	FB REF	20	I	GS1
5	—	VEEI	21	I	CLP PLS1
6	—	DR VEE	22	—	VEE
7	O	SIG OUT	23	O	LPF C1
8	—	DR Vcc	24	I	BLACK1
9	I	KNEE PT	25	O	CLP C2
10	I	KNEE SW	26	I	G CTRL
11	O	FLR DET	27	I	F COMP
12	I	BLKG	28	—	VccI
13	—	GND2	29	O	LPF C2
14	I	ZERO	30	I	BLACK2
15	—	Vcc	31	O	CLP C1
16	I	BLK SHAD	32	I	CLP PLS2

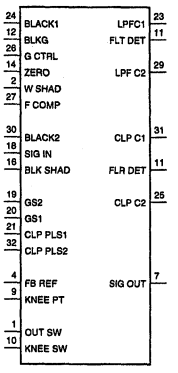

INPUT
BLACK1, 2 : FOR CLAMP DC COMPENSATION
BLKG : BLANKING SIGNAL
BLK SHAD : BLACK SHADING CORRECTION SIGNAL
CLP PLS1, 2 : CLAMP PULSE
F COMP : FLARE COMPENSATION SIGNAL
FB REF : OUTPUT 2 INVERT AMPLIFY DC ADJUST
G CTRL : WHITE BALANCE GAIN CONTROL
GS1, 2 : GAIN SELECT
KNEE PT : KNEE POINT
KNEE SW : 1/4, 1/5 KNEE SELECT
(4.5 V = 1/4 KNEE, 0 V = 1/5 KNEE)
OUT SW : OUTPUT 3 AMPLIFY SELECT
SIG IN : SIGNAL INPUT
W SHAD : WHITE SHADING SIGNAL
ZERO : VARIABLE GAIN AMPLIFY ZERO POINT ADJUST

OUTPUT
CLP C1, C2 : FOR CLAMP CAPACITANCE
FLR DET : FLARE DETECT
LPF C1, C2 : CONNECT CAPACITANCE FOR LPF
SIG OUT : SIGNAL OUTPUT

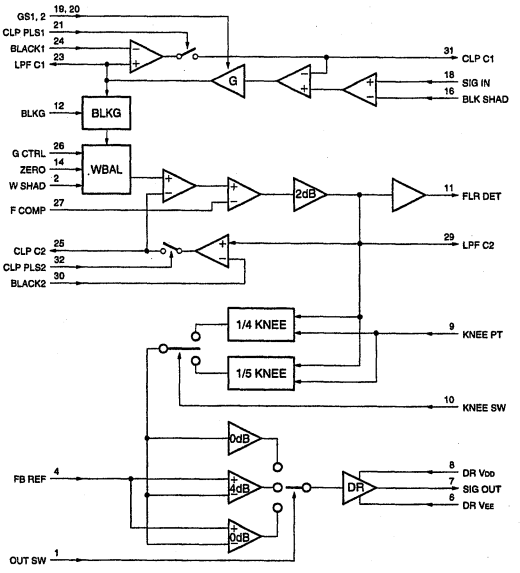

CXA3051R (SONY)

5-BIT A/D CONVERTER AND VCO
—TOP VIEW—

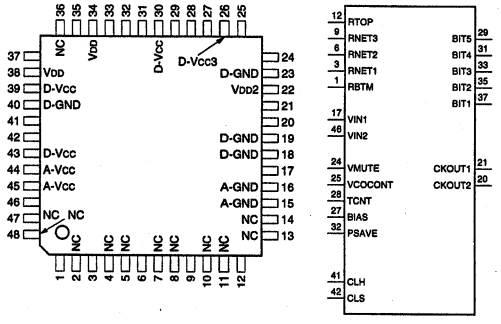

PIN NO.	I/O	SIGNAL	PIN NO.	I/O	SIGNAL	PIN NO.	I/O	SIGNAL	PIN NO.	I/O	SIGNAL
1	I	RBTM	13	—	NC	25	I	VCOCONT	37	O	BIT1(LSB)
2	—	NC	14	—	NC	26	—	D-Vcc3	38	—	VDD
3	O	RNET1	15	—	A-GND	27	I	BIAS	39	—	D-Vcc
4	—	NC	16	—	A-GND	28	I	TCNT	40	—	D-GND
5	—	NC	17	I	VIN1	29	O	BIT5(MSB)	41	I	CLH
6	O	RNET2	18	—	D-GND	30	—	D-Vcc2	42	I	CLS
7	—	NC	19	—	D-GND	31	O	BIT4	43	—	D-Vcc
8	—	NC	20	O	CKOUT2	32	I	PSAVE	44	—	A-Vcc
9	O	RNET3	21	O	CKOUT1	33	O	BIT3	45	—	A-Vcc
10	—	NC	22	—	VDD2	34	—	VDD	46	I	VIN2
11	—	NC	23	—	D-GND	35	O	BIT2	47	—	NC
12	I	RTOP	24	I	VMUTE	36	—	NC	48	—	NC

INPUT

BIAS	; BIAS VOLTAGE
CLH	; EXTERNAL CLOCK
CLS	; EXTERNAL CLOCK
PSAVE	; POWER SAVE (H : POWER SAVE MODE)
RBTM	; LEAST SIGNIFICANT VOLTAGE
RTOP	; MOST SIGNIFICANT VOLTAGE
TCNT	; TEMPERATURE CONTROL FOR VCO
VCOCONT	; VCO FREQUENCY CONTROL
VIN1, VIN2	; ANALOG VOLTAGE
VMUTE	; CLOCK SELECT (H : EXTERNAL, L : INTERNAL VCO)

OUTPUT

BIT1 - BIT5	; A/D
CKOUT1, CKOUT2	; VCO CLOCK
RNET1 - RNET3	; INTERMEDIATE VOLTAGE

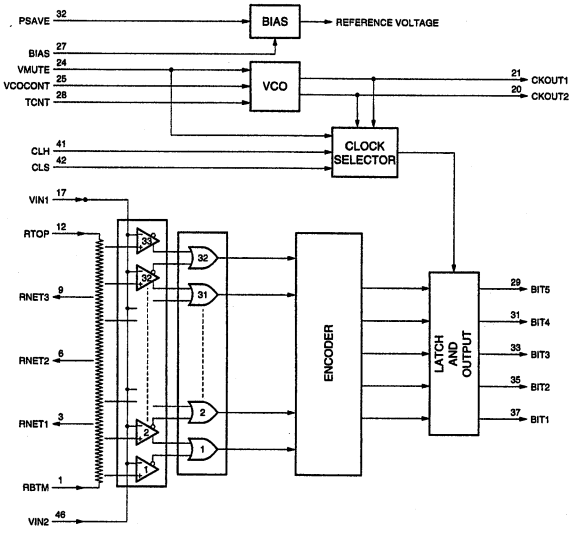

CXA3229R (SONY)

PLL FOR DIGITAL VTR
—TOP VIEW—

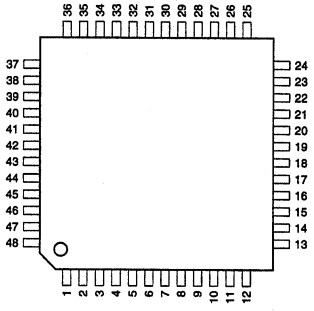

PIN NO.	I/O	SIGNAL	PIN NO.	I/O	SIGNAL	PIN NO.	I/O	SIGNAL	PIN NO.	I/O	SIGNAL
1	I	THRESH	13	—	GND	25	O	CKOUT1	37	—	Vcc
2	I	IBIT1	14	—	Vcc	26	—	Vcc	38	—	Vcc
3	—	GND	15	—	Vcc	27	O	OBIT5	39	—	Vcc
4	I	IBIT2	16	O	BIAS	28	—	Vcc	40	—	GND
5	I	PSAVE	17	—	GND	29	O	OBIT4	41	O	VCOO1
6	I	IBIT3	18	O	EOUT4	30	—	Vcc	42	O	VCOO2
7	—	GND	19	O	EOUT1	31	O	OBIT3	43	—	GND
8	I	IBIT4	20	O	EOUT3	32	—	Vcc	44	I	VCOCNT
9	—	GND	21	O	EOUT2	33	O	OBIT2	45	—	Vcc
10	I	IBIT5	22	—	GND	34	I	TCNT	46	—	Vcc
11	I	CKIN1	23	I	CKSEL	35	O	OBIT1	47	—	Vcc
12	I	CKIN2	24	—	Vcc	36	O	OBIT0	48	I	IBIT0

INPUTS

CKIN1, CKIN2	: CLOCK
CKSEL	: CKOUT1 INVERT/NONINVERT CONTROL
IBIT0 - IBIT5	: DATA
PSAVE	: POWER SAVE
TCNT	: VCO TEMPERATURE CHARACTERISTICS CONTROL
THRESH	: THRESHOLD CONTROL (NORMALLY OPEN)
VCOCNT	: VCO FREQUENCY CONTROL

OUTPUTS

BIAS	: INTERNAL VOLTAGE REFERENCE (NORMALLY OPEN)
CKOUT1	: CLOCK
EOUT1 - EOUT4	: PHASE ERROR
OBIT0 - OBIT5	: DATA
VCOO1, VCOO2	: VOLTAGE CONTROLLED OSCILLATOR

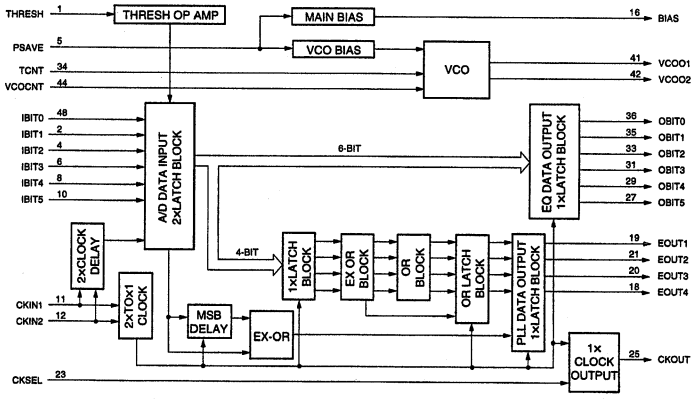

CXA3053R (SONY)

PHASE EQUALIZER AND QUANTIZED FEED-BACK (QFB) CIRCUIT

—TOP VIEW—

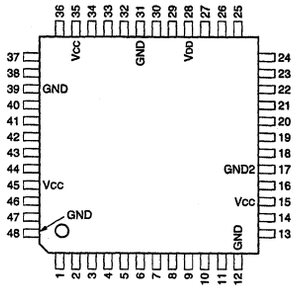

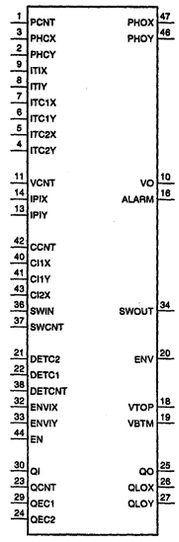

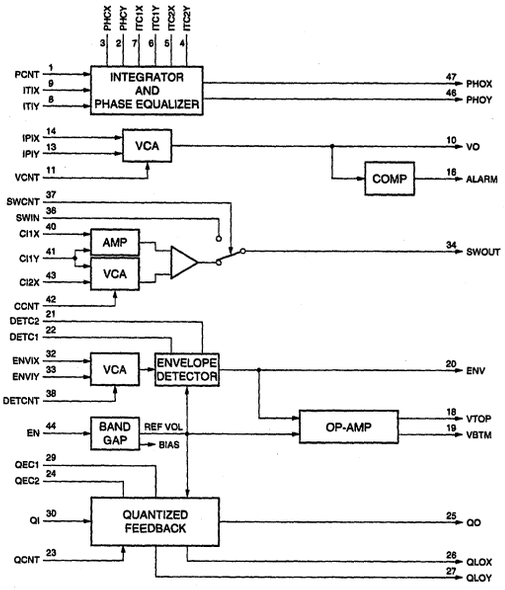

PIN NO.	I/O	SIGNAL	PIN NO.	I/O	SIGNAL
1	I	PCNT	25	O	QO
2	I	PHCY	26	O	QLOX
3	I	PHCX	27	O	QLOY
4	I	ITC2Y	28	—	VDD
5	I	ITC2X	29	I	QEC1
6	I	ITC1Y	30	I	QI
7	I	ITC1X	31	—	GND
8	I	ITIY	32	I	ENVIX
9	I	ITIX	33	I	ENVIY
10	O	VO	34	O	SWOUT
11	I	VCNT	35	—	Vcc
12	—	GND	36	I	SWIN
13	I	IPIY	37	I	SWCNT
14	I	IPIX	38	I	DETCNT
15	—	Vcc	39	—	GND
16	O	ALARM	40	I	CI1X
17	—	GND2	41	I	CI1Y
18	O	VTOP	42	I	CCNT
19	O	VBTM	43	I	CI2X
20	O	ENV	44	I	EN
21	I	DETC2	45	—	Vcc
22	I	DETC1	46	O	PHOY
23	I	QCNT	47	O	PHOX
24	I	QEC2	48	—	GND

INPUT

CCNT	; COSINE CORRECTION CONTROL SIGNAL
CI1X, CI1Y, CI2X	; COSINE DELAYED SIGNAL
DETC1, DETC2	; CAPACITOR CONNECTION TERMINALS
DETCNT	; VCA CONTROL FOR ENVELOPE DETECTOR
EN	; BAND GAP ENABLE (H : POWER SAVE)
ENVIX, ENVIY	; INPUTS OF VCA FOR ENVELOPE DETECTOR
IPIX, IPIY	; INPUTS OF VCA
ITC1X, ITC1Y, ITC2X, ITC2Y	; CAPACITOR CONNECTION TERMINALS
ITIX, ITIY	; INPUTS OF INTEGRATOR
PCNT	; PHASE EQ CONTROL
PHCX, PHCY	; CAPACITOR CONNECTION TERMINALS
QCNT	; QFB CONTROL
QEC1, QEC2	; CONNECTOR TERMINALS OF TIME CONSTANT DEVICES
QI	; INPUT OF QFB
SWCNT	; SWITCHING CONTROL
SWIN	; INPUT OF SWITCH
VCONT	; GAIN CONTROL FOR VCA

OUTPUT

ALARM	; ALARM OUTPUT
ENV	; ENVELOPE OUTPUT
PHOX, PHOY	; PHASE EQUALIZED OUTPUTS
QLOX, QLOY	; LIMITER OUTPUTS OF QFB
QO	; OUTPUT OF QFB
SWOUT	; OUTPUT OF SWITCH
VBTM	; ENVELOPE BOTTOM VOLTAGE
VO	; OUTPUT OF VCA
VTOP	; ENVELOPE TOP VOLTAGE

CX22017 (SONY)
CX22017-TH

VIDEO SIGNAL PROCESSOR

—TOP VIEW—

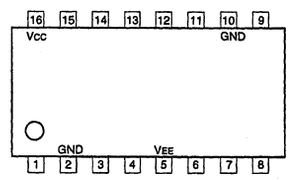

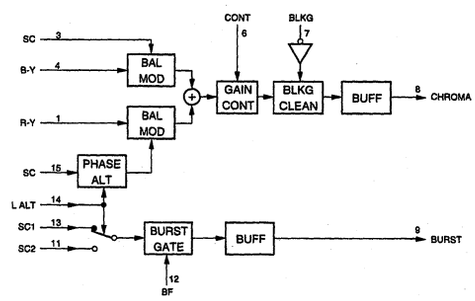

CXB1341R (SONY)

SERIAL DIGITAL INTERFACE TRANSMISSION ENCODER
—TOP VIEW—

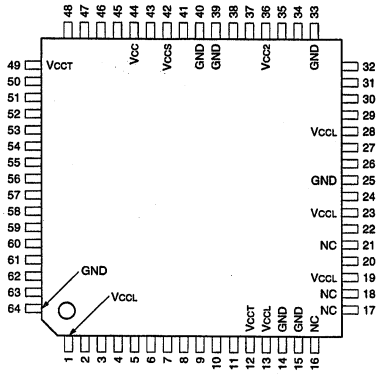

PIN NO.	I/O	SIGNAL	PIN NO.	I/O	SIGNAL	PIN NO.	I/O	SIGNAL	PIN NO.	I/O	SIGNAL
1	—	VCCL	17	—	NC	33	—	GND	49	—	VCCT
2	I	D1X	18	—	NC	34	I	MOD0	50	I	D8X
3	I	D1Y	19	—	VCCL	35	I	MOD1	51	I	D8Y
4	I	D0X	20	I	MDS	36	—	VCC2	52	I	D7X
5	I	D0Y	21	—	NC	37	O	LST	53	I	D7Y
6	I	PCX	22	I	BCAP	38	I	THRU	54	I	D6X
7	I	PCY	23	—	VCCL	39	—	GND	55	I	D6Y
8	I	SCKX	24	I	ICP	40	—	GND	56	I	D5X
9	I	SCKY	25	—	GND	41	O	SX	57	I	D5Y
10	I	TEST	26	O	CPX	42	—	VCCS	58	I	D4X
11	I	RESET	27	O	CPY	43	O	SY	59	I	D4Y
12	—	VCCT	28	—	VCCL	44	—	VCCL	60	I	D3X
13	—	VCCL	29	I	FSR0	45	I	ETS	61	I	D3Y
14	—	GND	30	I	FSR1	46	O	PCK	62	I	D2X
15	—	GND	31	I	FSR2	47	I	D9X	63	I	D2Y
16	—	NC	32	I	FSR3	48	I	D9Y	64	—	GND

INPUT
BCAP : EXTERNAL CAPACITOR FOR VCO
D9X - D0X : POSITIVE PARALLEL DATA
D9Y - D0Y : NEGATIVE PARALLEL DATA
ETS : 8-BIT/10-BIT SELECT (L = 8-BIT, H OR OPEN = 10-BIT)
FSR0 - FSR3 : EXTERNAL RESISTOR FOR SETTING THE FREE-RUN FREQUENCY OF VCO
ICP : EXTERNAL RESISTOR FOR CHARGE PUMP
MDS : TEST
MOD0, MOD1 : VCO RATE SELECT
PCX : POSITIVE PARALLEL CLOCK
PCY : NEGATIVE PARALLEL CLOCK
RESET : PLL RESET
SCKX, SCKY : TEST
TEST : TEST
THRU : TEST

OUTPUT
LST : PLL LOCK STATUS
PCK : PARALLEL CLOCK
CPX, CPY : CHARGE PUMP
SX, SY : EXTERNAL RESISTOR FOR SERIAL DIFFERENTIAL

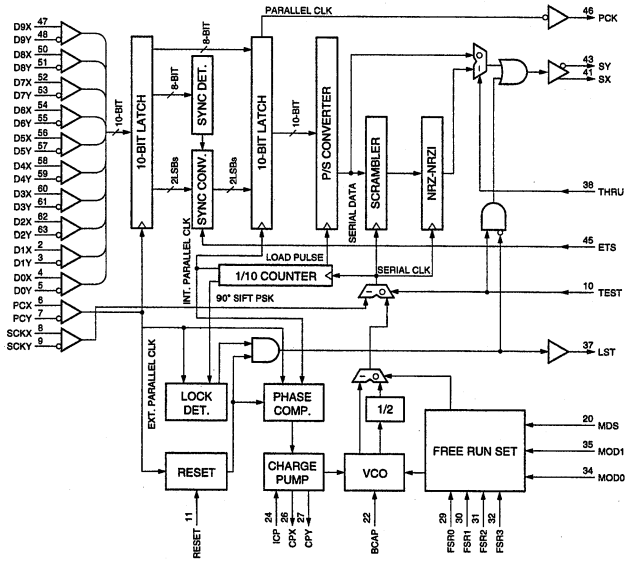

CXD1095AR (SONY)

C-MOS I/O EXPANDER
—TOP VIEW—

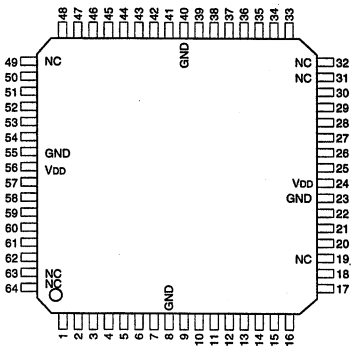

PIN NO.	I/O	SYMBOL	PIN NO.	I/O	SYMBOL	PIN NO.	I/O	SYMBOL	PIN NO.	I/O	SYMBOL
1	I/O	PB1	17	I/O	NC	33	I/O	D3	49	—	NC
2	I/O	PB2	18	I/O	PD0	34	I/O	D4	50	I/O	PE2
3	I/O	PB3	19	I/O	PD1	35	I/O	D5	51	I/O	PE3
4	I/O	PB4	20	I/O	PD2	36	I/O	D6	52	I/O	PA0
5	I/O	PB5	21	I/O	PD3	37	I/O	D7	53	I/O	PA1
6	I/O	PB6	22	I/O	PD4	38	I	XCLR	54	I/O	PA2
7	I/O	PB7	23	—	GND	39	I	XDIS	55	—	GND
8	—	GND	24	—	VDD	40	—	GND	56	—	VDD
9	I/O	PC0	25	I/O	PD5	41	I	XWR	57	I/O	PA3
10	I/O	PC1	26	I/O	PD6	42	I	XRD	58	I/O	PA4
11	I/O	PC2	27	I/O	PD7	43	I	XCS	59	I/O	PA5
12	I/O	PC3	28	I/O	D0	44	I	A0	60	I/O	PA6
13	WO	PC4	29	I/O	D1	45	I	A1	61	I/O	PA7
14	I/O	PC5	30	I/O	D2	46	I	A2	62	I/O	PB0
15	I/O	PC6	31	—	NC	47	I/O	PE0	63	—	NC
16	I/O	PC7	32	—	NC	48	I/O	PE1	64	—	NC

INPUT
A0 - A3 : ADDRESS
XCLR : CLEAR
XCS : CHIP SELECT
XDIS : DISABLE
XRD : READ
XWR : WRITE

INPUT/OUTPUT
DO - 7 : DATA BUS
PA0 - A7 : PORT 1
PB0 - B7 : PORT 2
PC0 - C7 : PORT 3
PD0 - D7 : PORT 4
PE0 - E7 : PORT 5

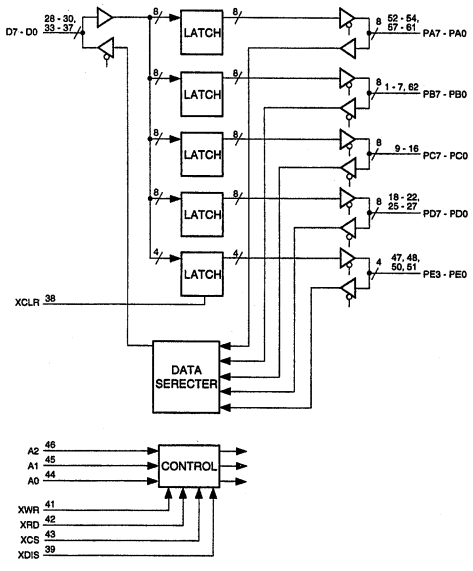

CXD1265R (SONY)
CXD1265R-T6

TIMING PULSE GENERATOR FOR CCD CAMERA
—TOP VIEW—

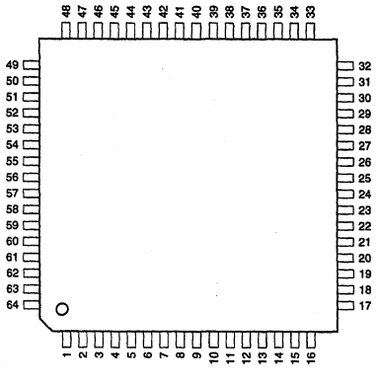

PIN NO.	I/O	SIGNAL	PIN NO.	I/O	SIGNAL	PIN NO.	I/O	SIGNAL	PIN NO.	I/O	SIGNAL
1	O	OSCO	17	O	A3	33	O	$\overline{V3}$	49	I/O	CLP2
2	I	OSCI	18	O	A0	34	O	$\overline{SG2}$	50	I/O	CLP3
3	I	EF	19	O	A1	35	O	$\overline{V4}$	51	O	CLP4
4	I	ED0	20	O	A2	36	I	TEST2	52	O	PBLK
5	I	ED1	21	—	GND	37	O	MCK	53	O	ID
6	I	ED2	22	O	RG	38	O	$\overline{SHP}$	54	O	WEN
7	I	SMD1	23	—	NC	39	O	$\overline{SHD}$	55	I	GM
8	—	GND	24	—	Vcc	40	—	GND	56	—	Vcc
9	I	SMD2	25	—	Vcc	41	O	$\overline{SP1}$	57	O	CL
10	O	$\overline{VCT}$	26	O	H1	42	O	$\overline{SP2}$	58	I	PS
11	I	D1	27	O	H2	43	O	$\overline{SH1/SHP}$	59	I	HD
12	I	D2	28	—	GND	44	O	$\overline{SH2/SHD}$	60	I	VD
13	I	D3	29	O	$\overline{SUB}$	45	O	$\overline{DL1}$	61	I	HTSG
14	I	D4	30	O	$\overline{V2}$	46	O	$\overline{DL2}$	62	I	TEST
15	O	A5	31	O	$\overline{V1}$	47	O	BFG	63	O	$\overline{CK}$
16	O	A4	32	O	$\overline{SG1}$	48	O	CLP1	64	I	CK

INPUTS

CK	: NTSC (1820 fH)/PAL (1816 fH) CLOCK
D1	: NORMALLY FIX TO "LOW" LEVEL
D2	: $\overline{COLOR}$/BW SELECT
D3	: $\overline{FIELD}$/FRAME SELECT
D4	: $\overline{NTSC}$ (EIA) /PAL (CCIR) SELECT
ED0 - ED2	: SHUTTER SPEED SETTING
EF	: (NOT IN USE)
GM	: $\overline{ANALOG\ PROCESSING}$/DIGITAL PROCESSING
HD	: HORIZONTAL SYNC
HTSG	: XSG1, XSG2 CONTROL
OSCI	: INVERTER FOR OSCILLATOR
PS	: SHUTTER SPEED SELECT ($\overline{SERIAL}$/PARALLEL)
SMD1, SMD2	: SHUTTER MODE SETTING
TEST, TEST2	: TEST
VD	: VERTICAL SYNC

OUTPUTS

A0 - A5	: (NOT IN USE)
BFG	: ENCODER/CHROMA MODULATOR PULSE
$\overline{CK}$	: NTSC (1820 fH)/PAL (1816 fH) CLOCK
CL	: NTSC (910 fH)/PAL (908 fH) CLOCK
CLP1, CLP4	: CLAMP PULSE
$\overline{DL1}$, $\overline{DL2}$	: CLOCK FOR DELAY LINE
H1, H2	: CCD HORIZONTAL REGISTER DRIVE CLOCK
ID	: LINE IDENTIFICATION
MCK	: NTSC (910 fH)/PAL (908 fH) CLOCK
OSCO	: INVERTER FOR OSCILLATOR
PBLK	: BLANKING CLEANING PULSE
RG	: RESET GATE PULSE
$\overline{SG1}$, $\overline{SG2}$	: CCD ELECTRIC CHARGE READ OUT PULSE
$\overline{SH1}$, $\overline{SH2}$	: SELECTION
SHD, $\overline{SHD}$	: DATA S/H PULSE
SHP, $\overline{SHP}$	: PRE-CHARGE LEVEL S/H PULSE
$\overline{SP1}$, $\overline{SP2}$	: COLOR SEPARATION S/H PULSE
$\overline{SUB}$	: CCD ELECTRIC CHARGE SUBSTRATE PULSE
$\overline{V1}$ - $\overline{V4}$	: CCD VERTICAL REGISTER DRIVE CLOCK
$\overline{VCT}$	: (NOT IN USE)
WEN	: WRITE ENABLE

INPUT/OUTPUT

CLP2, CLP3	: CLAMP PULSE

OTHER

NC	: NO CONNECTION

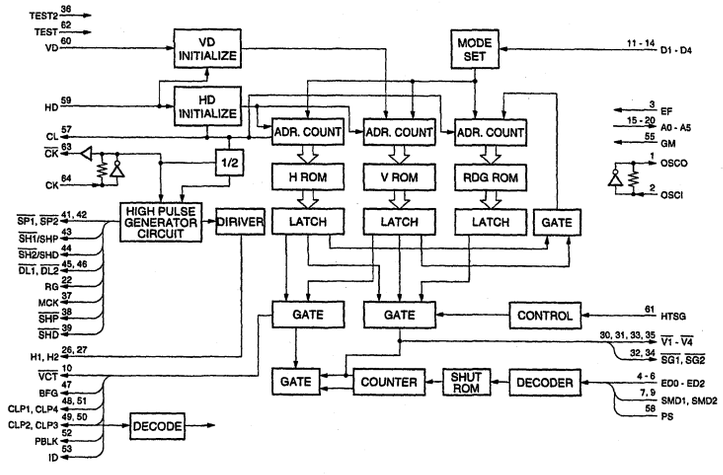

CXD2306Q (SONY)

C-MOS 10-BIT 1CH D/A CONVERTER
—TOP VIEW—

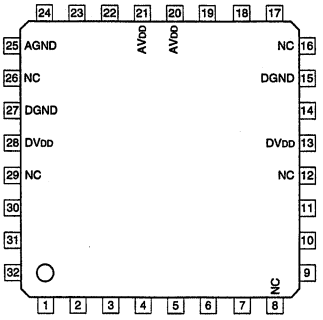

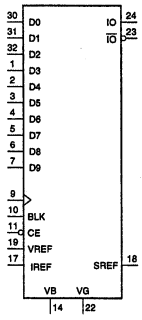

PIN No.	I/O	SIGNAL	PIN No.	I/O	SIGNAL
1	I	D3	17	I	IREF
2	I	D4	18	O	SREF
3	I	D5	19	I	VREF
4	I	D6	20	—	AVDD
5	I	D7	21	—	AVDD
6	I	D8	22	O	VG
7	I	D9 (MSB)	23	O	$\overline{IO}$
8	—	NC	24	O	IO
9	I	CK	25	—	AGND
10	I	BLK	26	—	NC
11	I	$\overline{CE}$	27	—	DGND
12	—	NC	28	—	DVDD
13	—	DVDD	29	—	NC
14	O	VB	30	I	D0 (LSB)
15	—	DGND	31	I	D1
16	—	NC	32	I	D2

BLK : BLANKING PULSE INPUT
CE : CHIP ENABLE
CK : CLOCK INPUT
D0 - 7 : DIGITAL DATA INPUTS
IO : CURRENT OUTPUT
$\overline{IO}$: INVERT CURRENT OUTPUT
IREF : CURRENT REFERENCE INPUT
SREF : INDEPENDENT CONSTANT VOLTAGE OUTPUT
VB, VG : FOR CAPACITOR
VREF : VOLTAGE REFERENCE INPUT

MAXIMUM CONVERSION RATE

CXD2305Q	75MSPS
CXD2315Q	80MSPS

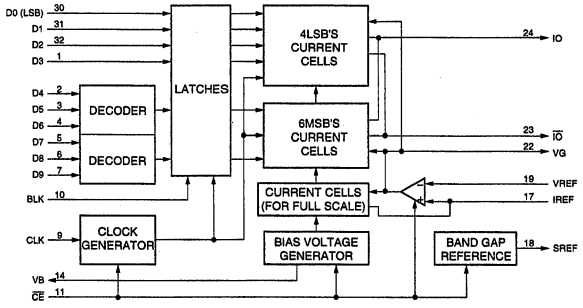

CXD2307R-T6 (SONY)

C-MOS 10-BIT 50 MSPS RGB 3CHANNEL D/A CONVERTER
—TOP VIEW—

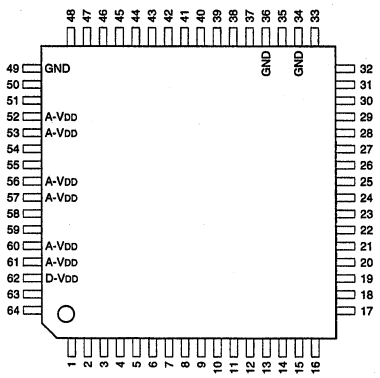

PIN NO.	I/O	SIGNAL	PIN NO.	I/O	SIGNAL	PIN NO.	I/O	SIGNAL	PIN NO.	I/O	SIGNAL
1	I	R2	17	I	G8	33	I	BCK	49	—	GND
2	I	R3	18	I	G9	34	—	GND	50	O	RO
3	I	R4	19	I	B0 (LSB)	35	O	VB	51	O	$\overline{RO}$
4	I	R5	20	I	B1	36	—	GND	52	—	A-VDD
5	I	R6	21	I	B2	37	I	IRR	53	—	A-VDD
6	I	R7	22	I	B3	38	I	IRG	54	O	GO
7	I	R8	23	I	B4	39	I	IRB	55	O	$\overline{GO}$
8	I	R9	24	I	B5	40	I	VRR	56	—	A-VDD
9	I	G0 (LSB)	25	I	B6	41	I	VRG	57	—	A-VDD
10	I	G1	26	I	B7	42	I	VRB	58	O	BO
11	I	G2	27	I	B8	43	I	ROR	59	O	$\overline{BO}$
12	I	G3	28	I	B9	44	I	VGR	60	—	A-VDD
13	I	G4	29	I	BLK	45	I	ROG	61	—	A-VDD
14	I	G5	30	I	$\overline{CE}$	46	I	VGG	62	—	D-VDD
15	I	G6	31	I	RCK	47	I	ROB	63	I	R0 (LSB)
16	I	G7	32	I	GCK	48	I	VGB	64	I	R1

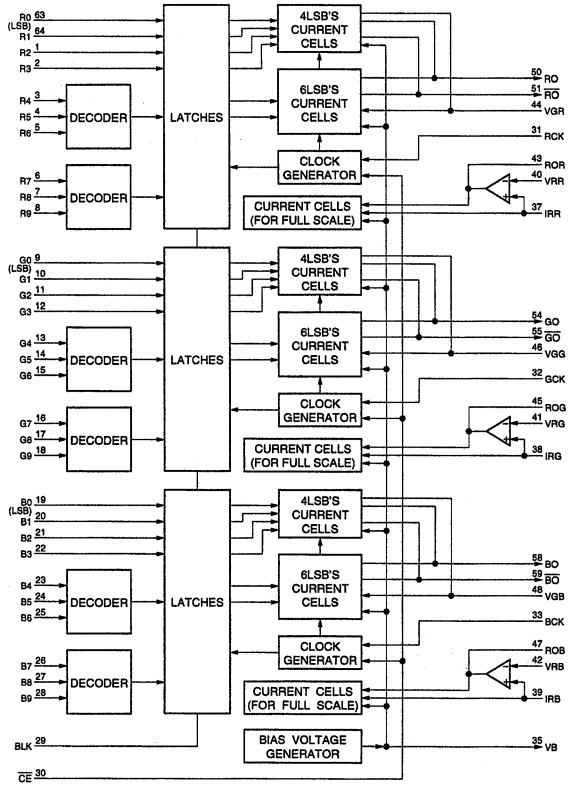

CXD2422R (SONY)

C-MOS TIMING GENERATOR FOR CCD CAMERA
—TOP VIEW—

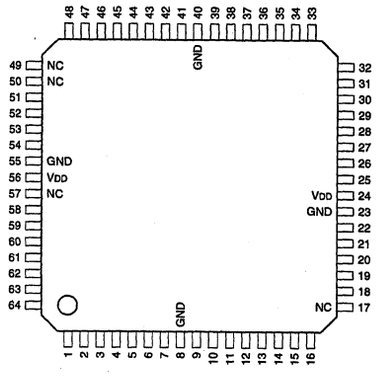

PIN NO.	I/O	SIGNAL	PIN NO.	I/O	SIGNAL	PIN NO.	I/O	SIGNAL	PIN NO.	I/O	SIGNAL
1	O	D0	17	—	NC	33	I	CLKI	49	—	NC
2	O	D1	18	O	SHD	34	O	CLKO	50	—	NC
3	O	D2	19	I	BBI	35	O	XSUB	51	O	SDO
4	O	D3	20	O	BBO	36	O	XH2	52	O	BCO
5	I	VD	21	O	VCLP	37	O	XH1	53	I	BCI
6	I	HD	22	O	HCLP2	38	O	XSG2	54	O	XRG
7	O	CLK	23	—	GND	39	O	XSG1	55	—	GND
8	—	GND	24	—	VDD	40	—	GND	56	—	VDD
9	I	TEST1	25	I	TEST6	41	O	XV4	57	—	NC
10	I	TEST2	26	O	HCLP1	42	O	XV3	58	I	HTSG
11	I	TEST3	27	I	PBLKON	43	O	XV2	59	I	RST
12	I	TEST4	28	O	PBLK	44	O	XV1	60	I	TEST12
13	I	TEST5	29	I	TEST7	45	O	TEST8	61	I	FLD/FRM
14	O	SHP	30	I	SD	46	O	TEST9	62	I	EIA/CCIR
15	I	BAI	31	I	SC	47	O	TEST10	63	I	MODE
16	O	BAO	32	I	LD	48	O	TEST11	64	I	TEST13

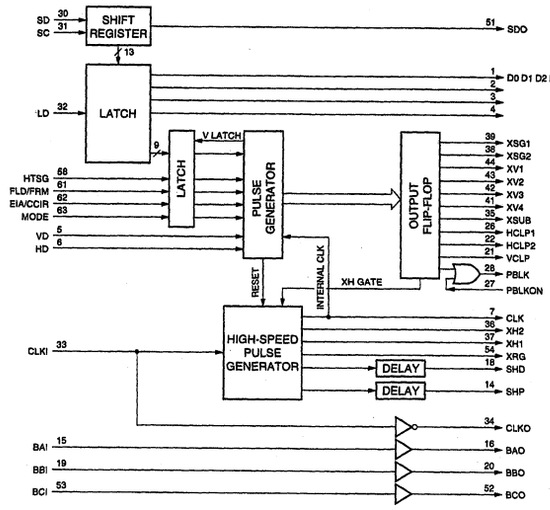

INPUT

BAI	: BUFFER INPUT FOR SHP PHASE ADJUSTMENT
BBI	: BUFFER INPUT FOR SHD PHASE ADJUSTMENT
BCI	: BUFFER INPUT FOR XRG PHASE ADJUSTMENT
CLKI	: CLOCK
EIA/CCIR	: SYSTEM SELECT (H:EIA/L:CCIR)
FLD/FRM	: MODE SELECT (H:FIELD CHARGE/L:FRAME CHARGE)
HD	: HORIZONTAL DRIVE
HTSG	: ON/OFF CONTROL FOR READ PULSE
LD	: LATCH PULSE FOR ELECTRONIC SHUTTER CONTROL
MODE	: MODE SELECT (H:COMPONENT DIGITAL/L:COMPOSITE DIGITAL)
PBLKON	: ON/OFF CONTROL FOR PBLK
RST	: FOR TEST
SC	: CLOCK FOR ELECTROMINIC SHUTTER CONTROL
SD	: SERIAL DATA FOR ELECTRONIC SHUTTER CONTROL
TEST1 - TEST7	: FOR TEST
TEST12, TEST13	: FOR TEST
VD	: VERTICAL DRIVE

OUTPUT

BAO	: NOT-INVERTED OUTPUT OF BAI
BBO	: NOT-INVERTED OUTPUT OF BBI
BCO	: NOT-INVERTED OUTPUT OF BCI
CLK	: DIVIDED-BY-TWO CLOCK (PIN-33)
CLKO	: INVERTED OUTPUT OF CLKI
D0 - D3	: EXPANSION I/O
HCLP1 - HCLP2	: HORIZONTAL CLAMP PULSE
PBLK	: PRE-BLANKING PULSE
SDO	: SERIAL DATA FOR ELECTRONIC SHUTTER CONTROL
SHD	: SAMPLING PULSE FOR CCD'S SIGNAL LEVEL
SHP	: SAMPLING PULSE FOR CCD'S PRE-CHARGE LEVEL
TEST8 - TEST11	: FOR TEST
VCLP	: VERTICAL CLAMP PULSE
XH1, XH2	: HORIZONTAL REGISTER DRIVE CLOCK
XRG	: OUTPUT SECTION RESET GATE PULSE
XSG1, XSG2	: SENSOR'S ELECTRON CHARGE READ PULSE
XSUB	: SUBSTRATE PULSE FOR ELECTRONIC SHUTTER
XV1 - XV4	: VERTICAL REGISTER DRIVE CLOCK

CXD8854Q (SONY)

AUXILIARY CIRCUIT FOR BIT REDUCTION ENCODER AND ERROR CORRECTION CODER
—TOP VIEW—

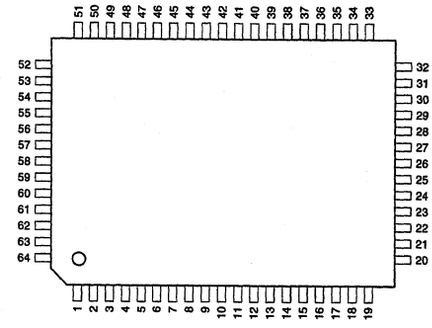

PIN NO.	I/O	SIGNAL	PIN NO.	I/O	SIGNAL	PIN NO.	I/O	SIGNAL	PIN NO.	I/O	SIGNAL
1	I	IPAD0	17	I	IAD0	33	O	OAF0	49	I	IID5
2	I	IPAD1	18	I	IAD1	34	O	OAF1	50	I	IID6
3	I	IPAD2	19	I	IAFS	35	O	OAF2	51	I	IID7
4	I	IPAD3	20	I	IAV0	36	O	OCSX	52	I	IVA0
5	I	IPAD4	21	I	IAV1	37	O	OWE	53	I	IVA1
6	I	IPAD5	22	I	IA64	38	I	IWSEL	54	I	IWR
7	I	IPAD6	23	O	OH625	39	I	OWS0	55	I	IWE
8	I	IPAD7	24	I	IACK	40	I	OWS1	56	I	ICK16
9	I	IRST	25	—	GND	41	—	NC	57	—	GND
10	—	GND	26	—	VDD	42	—	GND	58	—	VDD
11	O	OACK	27	I	ID5F0	43	I	ITR	59	I	IIN
12	O	OAD0	28	I	ID5F1	44	I	IID0	60	O	OINX
13	O	OAD1	29	I	ID5F2	45	I	IID1	61	I	IPC5
14	O	OAFS	30	I	IR5F0	46	I	IID2	62	I	IPS0
15	O	OAV0	31	I	IR5F1	47	I	IID3	63	I	IPS1
16	O	OAV1	32	I	IR5F2	48	I	IID4	64	I	IPSTB

CXD306-138Q (SONY)

C-MOS DATA RATE CONVERTER

—TOP VIEW—

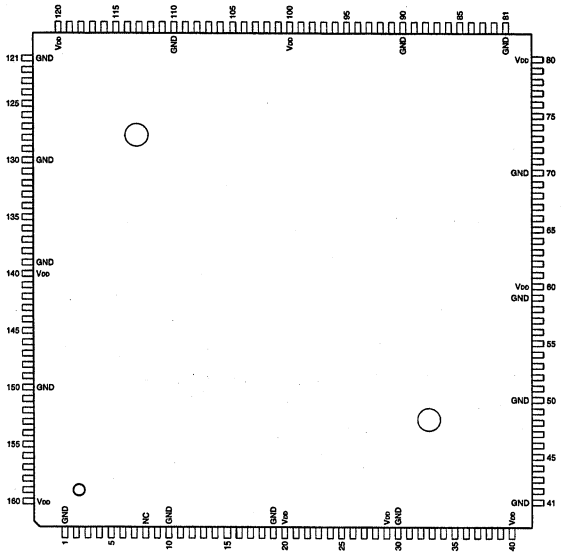

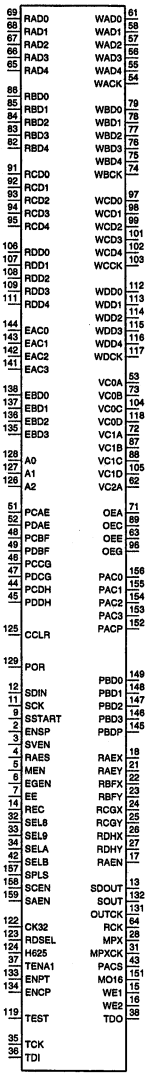

PIN No.	I/O	SIGNAL	PIN No.	I/O	SIGNAL	PIN No.	I/O	SIGNAL	PIN No.	I/O	SIGNAL
1	—	GND	41	—	GND	81	—	GND	121	—	GND
2	I	ENSP	42	I	SELB	82	I	RBD4	122	I	CK32
3	I	SVEN	43	O	PACS	83	I	RBD3	123	I	RDSEL
4	I	RAES	44	I	PCDH	84	I	RBD2	124	I	H625
5	I	MEN	45	I	PDDH	85	I	RBD1	125	I	CCLR
6	I	EGEN	46	I	PCCG	86	I	RBD0	126	I	A2
7	I	EE	47	I	PDCG	87	O	VC1B	127	I	A1
8	—	NC	48	I	PCBF	88	O	VC1C	128	I	A0
9	I	SSTART	49	I	PDBF	89	O	OEC	129	I	POR
10	—	GND	50	—	GND	90	—	GND	130	—	GND
11	I	SCK	51	I	PCAE	91	I	RCD0	131	O	OUTCK
12	I	SDIN	52	I	PDAE	92	I	RCD1	132	O	SOUT
13	O	SDOUT	53	O	VC0A	93	I	RCD2	133	I	ENPT
14	I	REC	54	O	WACK	94	I	RCD3	134	I	ENCP
15	O	WE1	55	O	WAD4	95	I	RCD4	135	I	EBD3
16	O	WE2	56	O	WAD3	96	O	OEG	136	I	EBD2
17	O	RAEN	57	O	WAD2	97	O	WCD0	137	I	EBD1
18	O	RAEX	58	O	WAD1	98	O	WCD1	138	I	EBD0
19	—	GND	59	—	GND	99	O	WCD2	139	—	GND
20	—	VDD	60	—	VDD	100	—	VDD	140	—	VDD
21	O	RAEY	61	O	WAD0	101	O	WCD3	141	I	EAC3
22	O	RBFX	62	O	VC2A	102	O	WCD4	142	I	EAC2
23	O	RBFY	63	O	OEE	103	O	WCCK	143	I	EAC1
24	O	RCGX	64	O	RCK	104	O	VC0C	144	I	EAC0
25	O	RCGY	65	I	RAD4	105	O	VC1D	145	O	PBDP
26	O	RDHX	66	I	RAD3	106	I	RDD0	146	O	PBD3
27	O	RDHY	67	I	RAD2	107	I	RDD1	147	O	PBD2
28	O	MPX	68	I	RAD1	108	I	RDD2	148	O	PBD1
29	—	VDD	69	I	RAD0	109	I	RDD3	149	O	PBD0
30	—	GND	70	—	GND	110	—	GND	150	—	GND
31	O	MPXCK	71	O	OEA	111	I	RDD4	151	O	MO16
32	I	SEL8	72	O	VC1A	112	O	WDD0	152	O	PACP
33	I	SEL9	73	O	VC0B	113	O	WDD1	153	O	PAC3
34	I	SELA	74	O	WBCK	114	O	WDD2	154	O	PAC2
35	I	TCK	75	O	WBD4	115	O	WDD3	155	O	PAC1
36	I	TDI	76	O	WBD3	116	O	WDD4	156	O	PAC0
37	I	TENA1	77	O	WBD2	117	O	WDCK	157	I	SPLS
38	O	TDO	78	O	WBD1	118	O	VC0D	158	I	SCEN
39	—	VST	79	O	WBD0	119	I	TEST	159	I	SAEN
40	—	VDD	80	—	VDD	120	—	VDD	160	—	VDD

INPUT

A0 - A2	; IC ADDRESS
CCLR	; COUNTER CLEAR
CK32	; 32MHz CLOCK
EAC0 - 3	; ENCODE A/C DATA
EBD0 - 3	; ENCODE B/D DATA
EE	; BYPASS
EGEN	; EDIT GAP ENABLE
ENCP	; ENCODE
ENPT	; ENCODE ENABLE PARITY
ENSP	; ENCODER START PULSE
H625	; H : 625 MODE
MEN	; MPX ENABLE
PCAE	; PB A/E CLOCK
PCBF	; PB B/F CLOCK
PCCG	; PB C/G CLOCK
PCDH	; PB D/H CLOCK
PDAE	; PB A/E DATA
PDBF	; PB B/F DATA
PDCG	; PB C/G DATA
PDDH	; PB D/H DATA
POR	; RESET
RAD0 - 4	; MEMORY (A) READ DATA
RAES	; REC A/E SELECT
RBD0 - 4	; MEMORY (B) READ DATA
RCD0 - 4	; MEMORY (C) READ DATA
RDD0 - 4	; MEMORY (D) READ DATA
RDSEL	; REC DATA SELECT
REC	; L : REC MODE
SAEN	; SAT A/E ENABLE
SCEN	; SAT C/G ENABLE
SCK	; SERIAL CLOCK
SDIN	; SERIAL DATA IN
SEL8	; PB A/E SELECT
SEL9	; PB B/F SELECT
SELA	; PB C/G SELECT
SELB	; PB D/H SELECT
SPLS	; START PULSE
SSTART	; SERIAL START
SVEN	; SERVO REC ENABLE
TCK	; TEST CLOCK
TDI	; TEST DATA
TENA1	; TEST ENABLE
TEST	; TEST

OUTPUT

MO16	; 16MHz CLOCK OUT
MPX	; MPX DATA
MPXCK	; MPX CLOCK
OEA, OEC, OEE, OEG	; MEMORY OUTPUT ENABLE
OUTCK	; SERIAL OUT CLOCK
PAC0 - 3	; PB A/C DATA
PACP	; PB A/C PARITY
PACS	; PB A/C SELECT
PBD0 - 3	; PB B/D DATA
PBDP	; PB B/D PARITY
RAEN	; REC A ENABLE
RAEX, RAEY	; REC A/E DATA
RBFX, RBFY	; REC B/F DATA
RCGX, RCGY	; REC C/G DATA
RCK	; MEMORY READ CLOCK
RDHX, RDHY	; REC D/H DATA
SOUT	; SERIAL OUT DATA
SDOUT	; SERIAL DATA
TDO	; TEST DATA
VC0A-D	; MEMORY VCLR0
VC1A-D	; MEMORY VCLR1
VC2A	; MEMORY VCLR2
WACK	; MEMORY (A) WRITE CLOCK
WAD0 - 4	; MEMORY (A) WRITE DATA
WBCK	; MEMORY (B) WRITE CLOCK
WBD0 - 4	; MEMORY (B) WRITE DATA
WCCK	; MEMORY (C) WRITE CLOCK
WCD0 - 4	; MEMORY (C) WRITE DATA
WDCK	; MEMORY (D) WRITE CLOCK
WDD0 - 4	; MEMORY (D) WRITE DATA
WE1, WE2	; MEMORY WRITE ENABLE

CXD3122R (SONY)
CXD3122R-T4

C-MOS DIGITAL LINE MEMORY
—TOP VIEW—

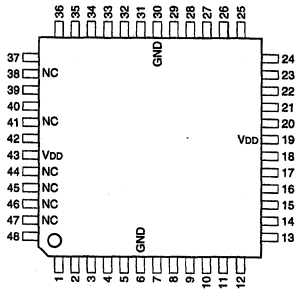

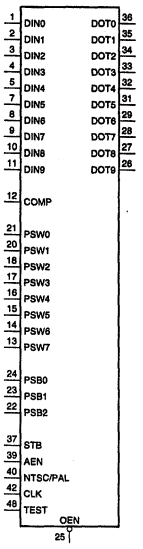

PIN NO.	I/O	SIGNAL	PIN NO.	I/O	SIGNAL
1	I	DIN0	25	I	$\overline{OEN}$
2	I	DIN1	26	O	DOT9
3	I	DIN2	27	O	DOT8
4	I	DIN3	28	O	DOT7
5	I	DIN4	29	O	DOT6
6	—	GND	30	—	GND
7	I	DIN5	31	O	DOT5
8	I	DIN6	32	O	DOT4
9	I	DIN7	33	O	DOT3
10	I	DIN8	34	O	DOT2
11	I	DIN9	35	O	DOT1
12	I	COMP	36	O	DOT0
13	I	PSW7	37	I	STB
14	I	PSW6	38	—	NC
15	I	PSW5	39	I	AEN
16	I	PSW4	40	I	NTSC/PAL
17	I	PSW3	41	—	NC
18	I	PSW2	42	I	CLK
19	—	VDD	43	—	VDD
20	I	PSW1	44	—	NC
21	I	PSW0	45	—	NC
22	I	PSB2	46	—	NC
23	I	PSB1	47	—	NC
24	I	PSB0	48	I	TEST

INPUT
AEN : AMOUNT OF DELAY SELECT
CLK : CLOCK
COM : COMPATIBILITY SELECT
DIN0 - DIN9 : DATA
NTSC/PAL : AMOUNT OF DELAY FOR NTSC/PAL/SECAM SELECT
OEN : OUTPUT ENABLE
PSB0 - PSB2 : NUMBER OF SMALL DELAY SETTING
PSW0 - PSW7 : NUMBER OF DELAY SETTING
STB : STANDBY
TEST : TEST

OUTPUT
DOT0 - DOT9 : DATA

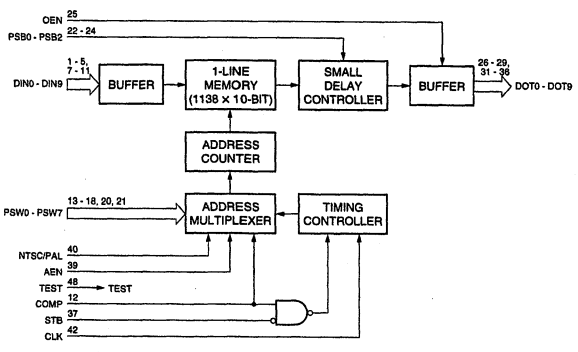

CXD8889R (SONY)

C-MOS SERIAL I/O
—TOP VIEW—

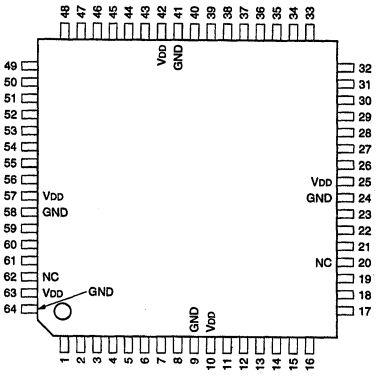

PIN NO.	I/O	SIGNAL	PIN NO.	I/O	SIGNAL	PIN NO.	I/O	SIGNAL	PIN NO.	I/O	SIGNAL
1	I/O	D0	17	—	IC	33	—	IC	49	—	IC
2	I/O	D1	18	—	IC	34	—	IC	50	—	IC
3	I/O	D2	19	—	IC	35	—	IC	51	—	IC
4	I/O	D3	20	—	NC	36	—	IC	52	—	IC
5	I/O	D4	21	O	BCKO	37	I	SEL	53	—	IC
6	I/O	D5	22	O	IVH	38	I	RVD	54	—	IC
7	I/O	D6	23	O	TVD	39	I	$\overline{RESE}$	55	—	IC
8	I/O	D7	24	—	GND	40	I	$\overline{WR}$	56	—	IC
9	—	GND	25	—	VDD	41	—	GND	57	—	VDD
10	—	VDD	26	—	IC	42	—	VDD	58	—	GND
11	—	IC	27	—	IC	43	I	$\overline{RD}$	59	I	BRDI
12	—	IC	28	—	IC	44	I	$\overline{CS}$	60	O	BRD0
13	—	IC	29	—	IC	45	I	CLK	61	O	BTVD
14	—	IC	30	—	IC	46	I	A2	62	—	NC
15	—	IC	31	—	IC	47	I	A1	63	—	VDD
16	—	IC	32	—	IC	48	I	A0	64	—	GND

IC : INTERNAL CONNECTION (NO CONNECTION)

INPUT
A0 - A2 : ADDRESS
BRDI : BI-PHASE RECEIVE DATA
CLK : CLOCK
$\overline{CS}$: CHIP SELECT
$\overline{RD}$: READ ENABLE
RESE : RESET
RVD : SERIAL DATA
SEL : CPU INTERFACE TIMING SELECT
$\overline{WR}$: WRITE ENABLE

OUTPUT
BCKO : INTERNAL CLOCK
BRDO : DEMODULATED BI-PHASE RECEIVE DATA
BTVD : MODULATED BI-PHASE TRANSMISSION DATA
IVH : RECEIVE DATA INTERRUPT
TVD : SERIAL DATA

INPUT/OUTPUT
D0 - D7 : PARALLEL DATA

CXD606-101R (SONY)

RATE CONVERTER FOR 3-CCD CAMERA

—TOP VIEW—

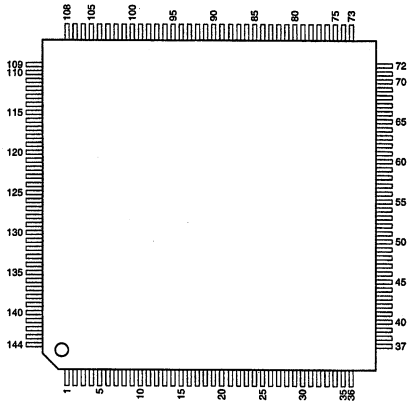

PIN NO.	I/O	SIGNAL	PIN NO.	I/O	SIGNAL	PIN NO.	I/O	SIGNAL	PIN NO.	I/O	SIGNAL
1	—	Vcc	37	—	Vcc	73	—	Vcc	109	—	Vcc
2	—	GND	38	—	GND	74	—	GND	110	—	GND
3	O	VCR5	39	I	PB	75	I/O	CCB7	111	O	DHD
4	O	VCR6	40	I	PS	76	I/O	CCB6	112	O	DVD
5	O	VCR7	41	I	TSTDIN4	77	I/O	CCB5	113	O	DSYNC
6	O	VCR8	42	I	TSTDIN3	78	I/O	CCB4	114	O	DCF
7	O	VCR9	43	I	TSTDIN2	79	I/O	CCB3	115	O	DBLKG
8	—	GND	44	I	TSTDIN1	80	I/O	CCB2	116	I/O	VYC0
9	—	GND	45	—	GND	81	—	GND	117	—	GND
10	I	VCRBCNT	46	I	CK1D	82	I/O	CCB1	118	I/O	VYC1
11	I	TSTDIN11	47	—	GND	83	I/O	CCB0	119	I/O	VYC2
12	I	TSTDIN10	48	I	TSTDIN0	84	I/O	CCR10	120	I/O	VYC3
13	I	TSTDIN9	49	I	$\overline{\text{TSTRST}}$	85	I/O	CCR9	121	I/O	VYC4
14	I	TSTDIN8	50	I	TSTSEL	86	I/O	CCR8	122	I/O	VYC5
15	I	TSTDIN7	51	—	GND	87	I/O	CCR7	123	I/O	VYC6
16	I	TSTDIN6	52	I	CK3D	88	I/O	CCR6	124	I/O	VYC7
17	I	TSTDIN5	53	—	GND	89	I/O	CCR5	125	I/O	VYC8
18	—	Vcc	54	—	Vcc	90	—	Vcc	126	—	Vcc
19	—	GND	55	—	GND	91	—	GND	127	—	GND
20	—	GND	56	O	CK2COMP	92	I/O	CCR4	128	I/O	VYC9
21	I/O	SDA3	57	I	CK2D	93	I/O	CCR3	129	I/O	VCRB0
22	I/O	SDA2	58	O	CK2COMN	94	I/O	CCR2	130	I/O	VCRB1
23	I/O	SDA1	59	—	GND	95	I/O	CCR1	131	I/O	VCRB2
24	I/O	SDA0	60	O	VCK	96	I/O	CCR0	132	I/O	VCRB3
25	I	SCK	61	—	GND	97	I/O	CY10	133	I/O	VCRB4
26	I	CS	62	—	GND	98	I/O	CY9	134	I/O	VCRB5
27	I	IOEN	63	I	CF	99	I/O	CY8	135	I/O	VCRB6
28	I	SRST	64	I	VD	100	I/O	CY7	136	I/O	VCRB7
29	I	TEST	65	I	HD	101	I/O	CY6	137	I/O	VCRB8
30	—	GND	66	—	GND	102	—	GND	138	—	GND
31	I	BC1	67	I	$\overline{\text{TRST1}}$	103	I/O	CY5	139	I/O	VCRB9
32	I	TCK	68	I	$\overline{\text{TRST2}}$	104	I/O	CY4	140	O	VCR0
33	I	TDI	69	—	GND	105	I/O	CY3	141	O	VCR1
34	I	TENA1	70	I/O	CCB10	106	I/O	CY2	142	O	VCR2
35	O	TDO	71	I/O	CCB9	107	I/O	CY1	143	O	VCR3
36	I	VST	72	I/O	CCB8	108	I/O	CY0	144	O	VCR4

INPUTS

CF	: COLOR FLAMING PULSE
CK1D	: CAMERA CLOCK
CK2D	: 27 MHz OR 28 MHz OR 36 MHz
CK3D	: VCR 27 MHz
CS	: CHIP SELECT
HD	: HD
IOEN	: IN/OUT ENABLE
PB	: $\overline{\text{REC}}$/PLAY BACK CONTROL
PS	: POWER SAVE ON/$\overline{\text{OFF}}$
SCK	: SERIAL CLOCK
VCRBCNT	: VCR B CONTROL/$\overline{\text{OUTPUT}}$
VD	: VD

OUTPUTS

CK2COMN	: CK2 PLL COMN
CK2COMP	: CK2 PLL COMP
DBLKG	: DIGITAL BLANKING
DCF	: DIGITAL COLOR FLAMING PULSE
DHD	: DIGITAL HD
DSYNC	: DIGITAL SYNC
DVD	: DIGITAL VD
VCK	: 27 MHz CLOCK
VCR0 - VCR9	: VCR R-Y

INPUTS/OUTPUTS

CCB0 - CCB10	: CAMERA B-Y 0 - 10
CCR0 - CCR10	: CAMERA R-Y 0 - 10
CY0 - CY10	: CAMERA Y 0 - 10
SDA0 - SDA3	: SERIAL DATA 0 - 3
VCRB0 - VCRB9	: VCR R-Y, B-Y 0 - 9
VYC0 - VYC9	: VCR Y 0 - 9

OTHERS

BC1	: CROSS CHECK
SRST	: LSI TEST
TCK	: CROSS CHECK
TDI	: CROSS CHECK
TDO	: CROSS CHECK
TENA1	: CROSS CHECK
TEST	: LSI TEST
$\overline{\text{TRST1}}$, $\overline{\text{TRST2}}$	: LSI TEST
TSTDIN0 - TSTDIN11	: LSI TEST
TSTRST	: LSI TEST
TSTSEL	: LSI TEST
VST	: CROSS CHECK

CXD8095Q (SONY)

C-MOS GATE ARRAY

—TOP VIEW—

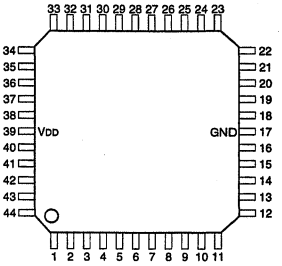

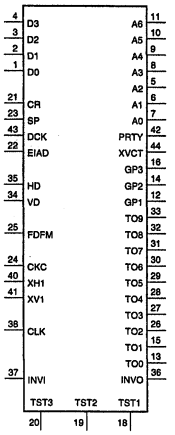

PIN No.	I/O	SYMBOL	PIN No.	I/O	SYMBOL	PIN No.	I/O	SYMBOL	PIN No.	I/O	SYMBOL
1	I	D0	12	O	GP1	23	I	SP	34	I	VD
2	I	D1	13	O	TO0	24	I	CKC	35	I	HD
3	I	D2	14	O	GP2	25	I	FDFM	36	O	INVO
4	I	D3	15	O	TO1	26	O	TO2	37	I	INVI
5	I/O	A2	16	O	GP3	27	O	TO3	38	I	CLK
6	I/O	A1	17	—	GND	28	O	TO4	39	—	VDD
7	I/O	A0	18	I	TST1	29	O	TO5	40	I	XH1
8	I/O	A3	19	I	TST2	30	O	TO6	41	I	XV1
9	O	A4	20	I	TST3	31	O	TO7	42	O	PRTY
10	O	A5	21	I	CR	32	O	TO8	43	I	DCK
11	O	A6	22	I	EIAD	33	O	TO9	44	O	XVCT

INPUT

CKC	: XH1 ACTIVE EDGE DECISION
CLK	: SYSTEM CLOCK
CR	: COMPENSATION DATA SELECT (H : μ-COM MODE, L : NORMAL MODE)
D0-D3	: 4-BIT PARALLEL DATA
DCK	: DATA INPUTS STROBE PULSE
EIAD	: H : EXT ADDRESS, L : INT ADDRESS
FDFM	: FRAME READ/FIELD READ : SWITCH (H : FIELD READ)
HD	: HORIZONTAL DRIVE
INVI	: INVERTER
SP	: INPUT DATA SERIAL/PARALLEL SWITCH (H : SERIAL)
TST1 - TST3	: TEST MODE SELECT
VD	: VERTICAL DRIVE
XH1	: CLOCK FOR COMPENSATION DATA
XV1	: LINE COUNTER INPUT TERMINAL

OUTPUT

A4 - A6	: DATA ADDRESS
GP1 - GP3	: GATE PULSE FOR COMPENSATION DATA (R, G, B-CH)
INVO	: INVERTER
PRTY	: 12-BIT DATA PARITY CHECK (H : EVEN)
TO0 - TO9	: TEST TERMINAL FOR INTERNAL DATA OUTPUTS
XVCT	: ROM POWER VOLTAGE CONTROL TERMINAL

INPUT/OUTPUT

A0 - A3	: DATA ADDRESS OUTPUTS (DATA ADDRESS INPUTS ; μ-COM MODE)

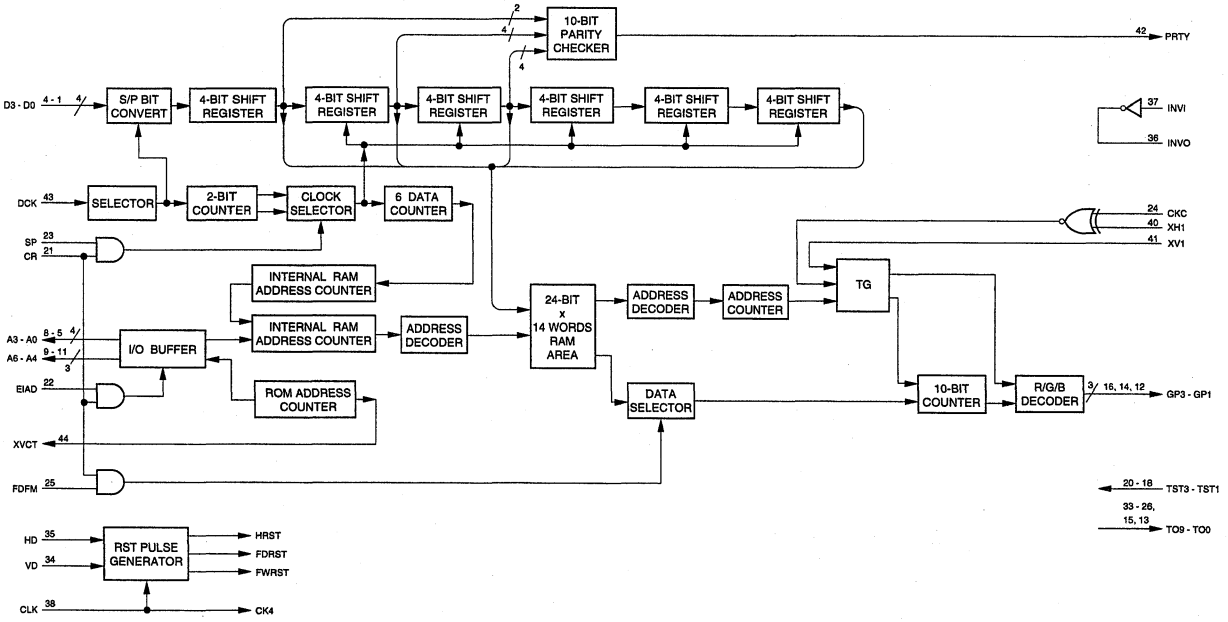

CXD8384Q (SONY)

C-MOS LTC READER/GENERATOR
—TOP VIEW—

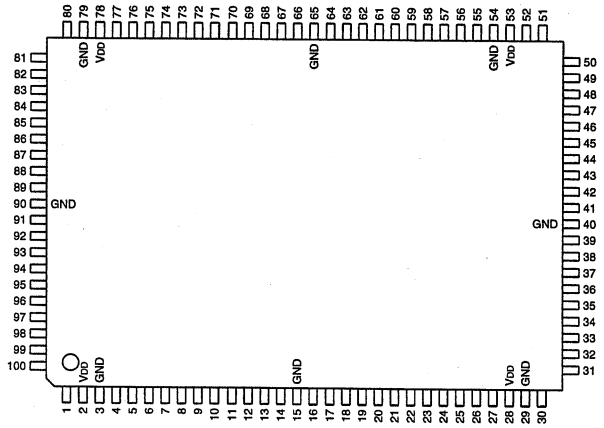

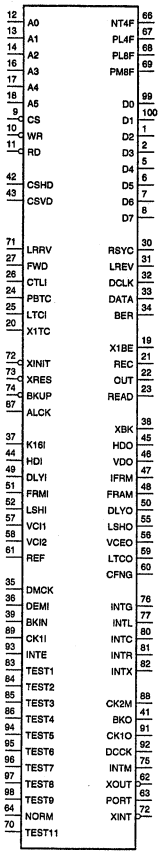

PIN No.	I/O	SIGNAL	PIN No.	I/O	SIGNAL	PIN No.	I/O	SIGNAL	PIN No.	I/O	SIGNAL
1	I/O	D2	26	I	CTLI	51	I	FRMI	76	O	INTG
2	I/O	D3	27	I	FWD	52	I	LSHI	77	O	INTL
3	—	VDD	28	—	VDD	53	—	VDD	78	—	VDD
4	—	GND	29	—	GND	54	—	GND	79	—	GND
5	I/O	D4	30	O	RSYC	55	O	LSHO	80	O	INTC
6	I/O	D5	31	O	LREV	56	O	VCEO	81	O	INTR
7	I/O	D6	32	O	DCLK	57	I	VCI1	82	O	INTX
8	I/O	D7	33	O	DATA	58	I	VCI2	83	I	TEST1
9	I	$\overline{CS}$	34	O	BER	59	O	LTCO	84	I	TEST2
10	I	$\overline{WR}$	35	I	DMCK	60	O	CFNG	85	I	TEST3
11	I	$\overline{RD}$	36	I	DEMI	61	I	REF	86	I	TEST4
12	I	A0	37	I	K16I	62	O	$\overline{XOUT}$	87	I	ALCK
13	I	A1	38	O	$\overline{XBK}$	63	O	PORT	88	O	CK2M
14	I	A2	39	I	$\overline{BKIN}$	64	I	NORM	89	I	CK1I
15	—	GND	40	—	GND	65	—	GND	90	—	GND
16	I	A3	41	O	BKO	66	O	NT4F	91	O	CK1O
17	I	A4	42	I	CSHD	67	O	PL4F	92	O	DCCK
18	I	A5	43	I	CSVD	68	O	PL8F	93	I	INTE
19	O	X1BE	44	I	HDI	69	O	PM8F	94	I	TEST5
20	I	X1TC	45	O	HDO	70	I	TEST11	95	I	TEST6
21	O	REC	46	O	VDO	71	I/O	LRRV	96	I	TEST7
22	O	OUT	47	O	IFRM	72	O	$\overline{XINT}$	97	I	TEST8
23	O	READ	48	O	FRAM	73	I	$\overline{XRES}$	98	I	TEST9
24	I	PBTC	49	I	DLYI	74	I	$\overline{BKUP}$	99	I/O	D0
25	I	LTCI	50	O	DLYO	75	O	INTM	100	I/O	D1

INPUT

A0 - A5	; ADDRESS BUS IN
ALCK	; ARITHMETIC LOGIC UNIT CLOCK IN
BKIN	; BACKUP IN (NEGATIVE LOGIC)
BKUP	; BACKUP EXECUTION IN (NEGATIVE LOGIC)
CK1I	; SYSTEM CLOCK IN
CSHD	; COMPOSITE SYNC/HD IN
CSVD	; COMPOSITE SYNC/VD IN
CTLI	; CTL SIGNAL IN
DEMI	; LONGITUDINAL TIME AND CONTROL CODE IN
DLYI	; INPUT TO DELAY CIRCUIT
DMCK	; LTC DEMODULATE CLOCK IN
FRMI	; FRAME SIGNAL IN
FWD	; CTL DIRECTION SIGNAL IN
HDI	; HORIZONTAL SYNC INPUT
INTE	; EXTERNAL INTERRUPT IN (POSITIVE LOGIC)
K16I	; 16KHz CLOCK IN BACKUP CLOCK IN
LRRV	; DIRECTION INPUT FOR LTC READER CALCULATION
LTCI	; GENERATED LTC IN
LSHI	; LTC SYNCHRINOUS H INPUT
NORM	; NORMAL/BACKUP MODE SELECT
TEST1 - TEST9	; TEST IN
TEST11	
PBTC	; PLAYBACK LTC IN
RD	; READ IN (NEGATIVE LOGIC)
REF	; REFERENCE OF LTC GENERATOR
VCI1	; LTC CLOCK IN-1
VCI2	; EXTERNAL LTC IN
X1TC	; LTC CLOCK IN-2
XRES	; SYSTEM RESET IN (NEGATIVE LOGIC)
WR	; WRITE IN (NEGATIVE LOGIC)

OUTPUT

BER	; BI-PHASE MARK ERROR (BIT ERROR)
BKO	; BACKUP CONTROL OUT-2 (POSITIVE LOGIC)
CFNG	; COLOR FRAME ERROR FLAG OUT
CK1O	; SYSTEM CLOCK OUT
CK2M	; CLOCK 2M OUT
CS	; CHIP SELECT IN (NEGATIVE LOGIC)
D0 - D7	; DATA BUS
DATA	; DEMODULATED SERIAL DATA OUT
DCCK	; LTC DECODE CLOCK OUT
DCLK	; DEMODULATED CLOCK OUT
DLYO	; OUTPUT FROM DELAY CIRCUIT
FRAM	; FRAME SIGNAL OUT -2
HDO	; HORIZONTAL SYNC DRIVE OUT
IFRM	; FRAME SIGNAL OUT -1
INTC	; CTL INTERRUPT OUT (POSITIVE LOGIC)
INTG	; GENERATOR INTERRUPT OUT (POSITIVE LOGIC)
INTL	; READER INTERRUPT -1 OUT (POSITIVE LOGIC)
INTM	; INTERRUPT MIX OUT (POSITIVE LOGIC)
INTR	; READER INTERRUPT -2 OUT (POSITIVE LOGIC)
INTX	; EXTERNAL LTC INTERRUPT OUT (POSITIVE LOGIC)
LREV	; READ REV/FWD BIT OUT
LSHO	; LTC SYNCHRONOUS SIGNAL H OUT
LTCO	; LTC SIGNAL OUT
NT4F, PL4F, PL8F, PM8F	; DEMODULATED COLOR FRAME OUT
OUT	; EXTERNAL OUTPUT LTC OUT
PORT	; PORT
READ	; READ LTC OUT
REC	; RECORD LTC OUT
RSYC	; READ SYNC WORD DATA OUT
VCEO	; LTC CLOCK OUT
VDO	; VERTICAL SYNC DRIVE OUT
X1BE	; BI-PHASE MARK ERROR (NORMAL SPEED READER)
XBK	; BACKUP CONTROL OUT-1 (NEGATIVE LOGIC)
XINT	; INVERTED INTERRUPT MIX OUT (NEGATIVE LOGIC)
XOUT	; INVERTED EXTERNAL OUTPUT LTC OUT

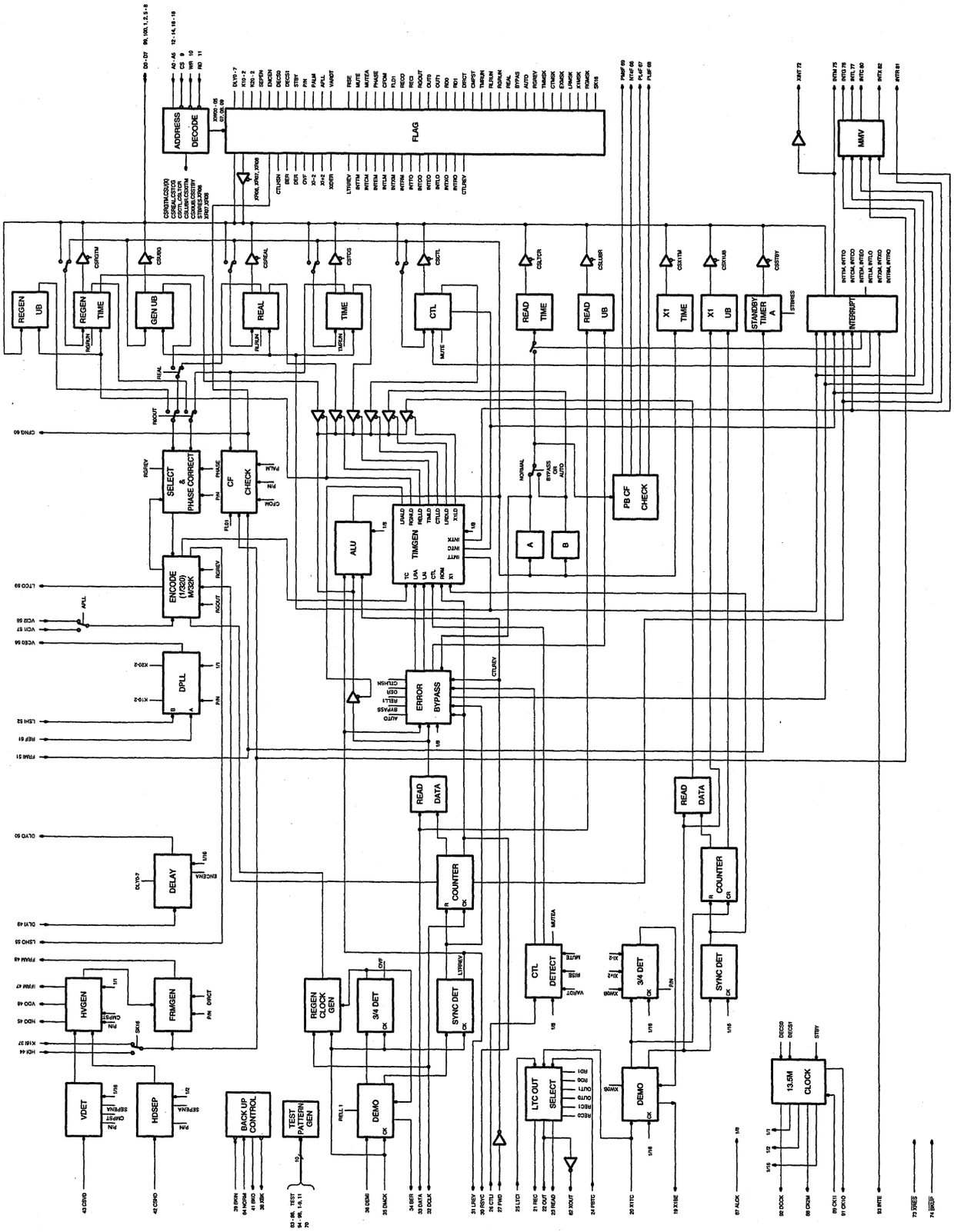
ADDRESS DECODE
FLAG
REGEN UB
REGEN TIME
GEN UB
REAL
TIME
CTL
READ TIME
READ UB
X1 TIME
X1 UB
STANDBY TIMER A
INTERRUPT
NMV
SELECT & PHASE CORRECT
CF CHECK
ENCODE (1/320) M/S2K
DPLL
ALU
TIMGEN
PB CF CHECK
ERROR BYPASS
READ DATA
COUNTER
DELAY
CTL DETECT
3/4 DET
SYNC DET
REGEN CLOCK GEN
HVGEN
FRMGEN
VDET
HDSEP
BACK UP CONTROL
TEST PATTERN GEN
DEMO
LTC OUT SELECT
13.5M CLOCK

CXD8385Q (SONY)

C-MOS ENCODER
—TOP VIEW—

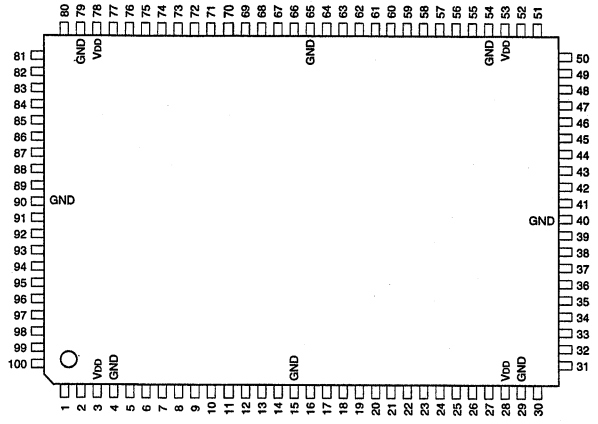

PIN No.	I/O	SIGNAL	PIN No.	I/O	SIGNAL	PIN No.	I/O	SIGNAL	PIN No.	I/O	SIGNAL
1	I	ANC9	26	I	VD1	51	O	MUD0	76	O	CM5
2	I	ANC8	27	I	VD0	52	O	MUD1	77	O	CM6
3	—	VDD	28	—	VDD	53	—	VDD	78	—	VDD
4	—	GND	29	—	GND	54	—	GND	79	—	GND
5	I	ANC7	30	I	PIN	55	O	MUD2	80	O	CM7
6	I	ANC6	31	I	PARAENC	56	O	MUD3	81	O	CM8
7	I	ANC5	32	I	HDELAY0	57	O	MUD4	82	O	CM9
8	I	ANC4	33	I	HDELAY1	58	I	VIEFENA	83	O	SYNC
9	I	ANC3	34	I	INX ON/OFF	59	O	CM0	84	O	PERROR1
10	I	ANC2	35	I	VC13	60	O	TFO	85	O	PERROR2
11	I	ANC1	36	I	VC12	61	O	TVO	86	I	MD0
12	I	ANC0	37	I	TRS MODE	62	O	MUD5	87	I	MD1
13	I	EXTH	38	I	CK27	63	O	MUD6	88	O	OC6
14	I	EXTF	39	I	INX B0/B2	64	O	MUD7	89	O	OC13
15	—	GND	40	—	GND	65	—	GND	90	—	GND
16	I	CF1	41	I	VC11	66	O	MUD8	91	O	OC27
17	I	CF2	42	I	VC10	67	O	MUD9	92	I	TX
18	I	VD9	43	I	XZLD	68	O	SYNC2	93	I	COMP
19	I	VD8	44	I	TCL	69	O	MFP	94	I	CFINFO
20	I	VD7	45	I	THCNT	70	O	CM1	95	I	SEL
21	I	VD6	46	I	TFCNT	71	O	CM2	96	I	RE
22	I	VD5	47	I	TFCK	72	O	CM3	97	I	INCH
23	I	VD4	48	I	TCNTO	73	O	ANEH	98	I	D1/$\overline{J2}$
24	I	VD3	49	O	SAVPNT	74	O	ANEV	99	I	SLNP
25	I	VD2	50	O	POUT	75	O	CM4	100	I	ANIS

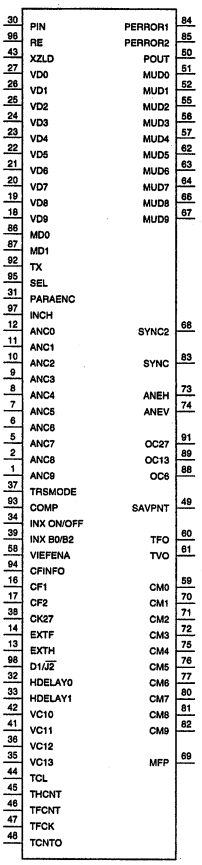

INPUT

ANC0 - ANC9	;	ANCILLARY DATA
ANIS	;	ANC GATE CONTROL
CF1/CF2	;	CF DATA
CFINFO	;	CFINFO CONTROL
CK27	;	27 MHz CLOCK
COMP	;	COMPOSIT/COMPONENT
D1/J2, SLNP	;	MODE CONTROL
EXTF	;	REF F
EXTH	;	REF H
HDELAY0, HDELAY1	;	JZ REF H TRS ADVANCE CONTROL
INCH, TCL, TCNTO, TFCK, TFCNT, THCNT, XZLD	;	TEST PIN
INX ON/OFF, INX B0/B2 VIEFENA	;	V. INX. CONTROL
PARAENC	;	SCRAMBLE NRZ CONVERT ON/OFF
PIN	;	PARITY
RE	;	ROUND CONTROL
TRSMODE	;	TRS 10-BIT/8-BIT SELECT
TX	;	TEST PIN
VC10 - VC13	;	525/60 V BLANK CONTROL
VD0 - VD9	;	VIDEO DATA

OUTPUT

ANEH, ANEV	;	PULSE
CM0 - CM9	;	H, F COUNTER
MFP	;	MULTIPLEX F COUNTER PULSE
MUD0 - MUD9	;	VIDEO DATA
OC13	;	13.5 MHz CLOCK
OC27	;	27 MHz CLOCK
OC6	;	6.75 MHz CLOCK
PERROR1, PERROR2	;	PARITY ERROR DETECT
POUT	;	PARITY
SAVPNT	;	SAV PULSE
SYNC, SYNC2	;	TIMING PULSE
TFO	;	F MONITOR
TVO	;	V MONITOR

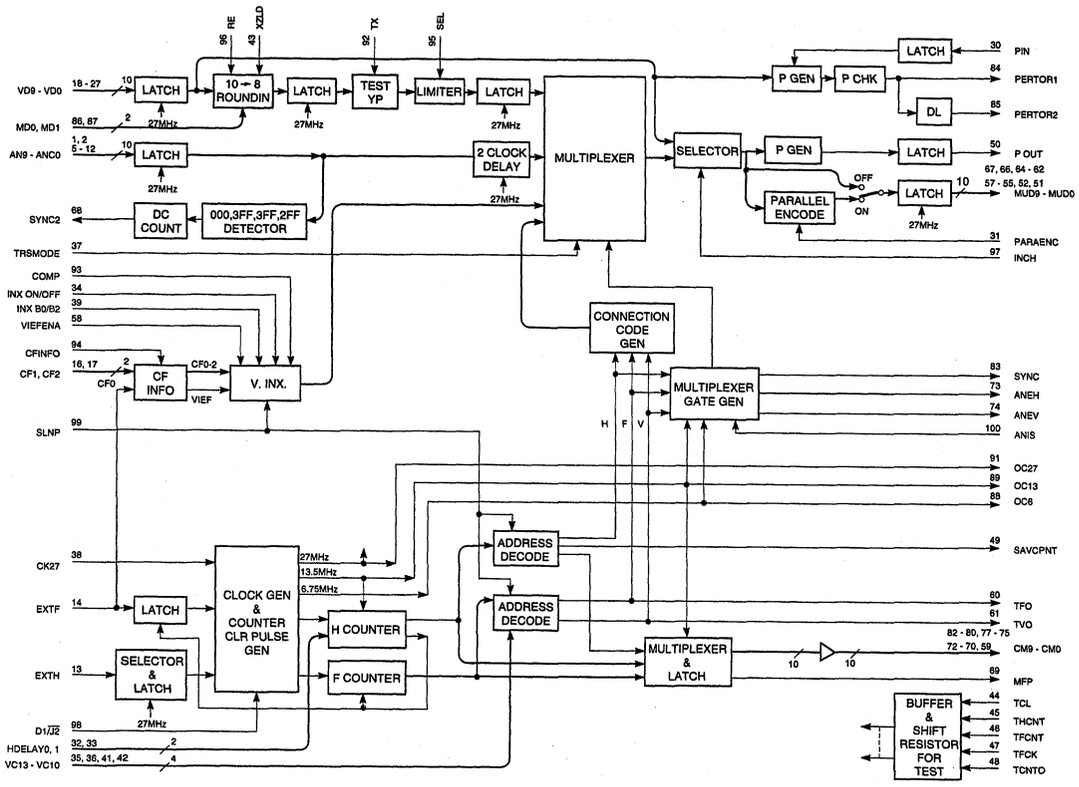
VD9 - VD0
MD0, MD1
AN9 - ANC0
SYNC2
TRSMODE
COMP
INX ON/OFF
INX B0/B2
VIEFENA
CFINFO
CF1, CF2
SLNP
CK27
EXTF
EXTH
D1/J2
HDELAY0, 1
VC13 - VC10
LATCH
10 → 8 ROUNDIN
TEST YP
LIMITER
2 CLOCK DELAY
MULTIPLEXER
DC COUNT
000,3FF,3FF,2FF DETECTOR
CF INFO
V. INX.
SELECTOR & LATCH
CLOCK GEN & COUNTER CLR PULSE GEN
H COUNTER
F COUNTER
P GEN
P CHK
DL
SELECTOR
PARALLEL ENCODE
OFF
ON
CONNECTION CODE GEN
MULTIPLEXER GATE GEN
ADDRESS DECODE
ADDRESS DECODE
MULTIPLEXER & LATCH
BUFFER & SHIFT RESISTOR FOR TEST
27MHz
13.5MHz
6.75MHz
PIN
PERTOR1
PERTOR2
P OUT
MUD9 - MUD0
PARAENC
INCH
SYNC
ANEH
ANEV
ANIS
OC27
OC13
OC6
SAVCPNT
TFO
TVO
CM9 - CM0
MFP
TCL
THCNT
TFCNT
TFCK
TCNTO

CXD8281Q (SONY)

C-MOS DIGITAL AUDIO TIME BASE COMPRESSION FOR SIF TRANSMITER

—TOP VIEW—

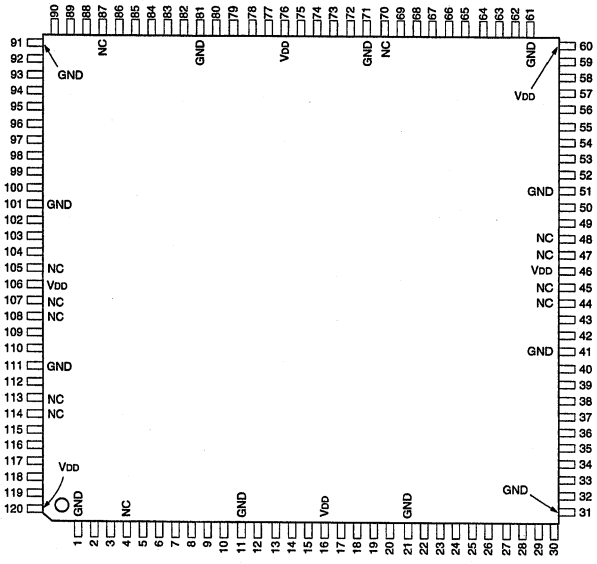

PIN NO.	I/O	SIGNAL	PIN NO.	I/O	SIGNAL	PIN NO.	I/O	SIGNAL	PIN NO.	I/O	SIGNAL
1	—	GND	31	—	GND	61	—	GND	91	—	GND
2	IU	$\overline{IT1}$	32	ID	C3/4	62	IU	CWA0 (LSB)	92	OT	AUX0 (LSB)
3	IU	$\overline{CLR}$	33	ID	C1/2	63	IU	CWA1	93	OT	AUX1
4	—	NC	34	ID	U3/4	64	IU	CWA2	94	OT	AUX2
5	O	OT1	35	ID	U1/2	65	IU	CWA3 (MSB)	95	OT	AUX3
6	O	OT2	36	ID	V3/4	66	IU	CWEN	96	OT	AUX4
7	O	OT3	37	ID	V1/2	67	IU	$\overline{IT3}$	97	OT	AUX5
8	O	OT4	38	ID	AD3/4	68	IU	$\overline{IT4}$	98	OT	AUX6
9	O	OT5	39	ID	AD1/2	69	IU	$\overline{IT5}$	99	OT	AUX7
10	O	OT6	40	ID	BCK	70	—	NC	100	OT	AUX8
11	—	GND	41	—	GND	71	—	GND	101	—	GND
12	O	OT7	42	ID	128CK	72	IU	DID0	102	OT	AUX9 (MSB)
13	O	OT8	43	IU	LRCK	73	IU	DID1	103	O	ADBT
14	O	OT9	44	—	NC	74	IU	LIM0	104	ID	$\overline{OEAUX}$
15	O	OT10	45	—	NC	75	IU	LIM1	105	—	NC
16	—	VDD	46	—	VDD	76	—	VDD	106	—	VDD
17	O	OT11	47	—	NC	77	IU	$\overline{CHS1}$	107	—	NC
18	O	OT12	48	—	NC	78	IU	$\overline{CHS2}$	108	—	NC
19	O	OT13	49	IU	$\overline{IT2}$	79	IU	$\overline{CHS3}$	109	IU	SYNC
20	O	OT14	50	IU	CWCK	80	IU	$\overline{CHS4}$	110	ID	VCK
21	—	GND	51	—	GND	81	—	GND	111	—	GND
22	IU	CHEX1	52	IU	CWD7 (MSB)	82	IU	DLY0 (LSB)	112	IU	D2/D1
23	IU	CHEX0	53	IU	CWD6	83	IU	DLY1	113	—	NC
24	IU	AFS	54	IU	CWD5	84	IU	DLY2	114	—	NC
25	IU	LRS	55	IU	CWD4	85	IU	DLY3	115	O	OT15
26	IU	DIR	56	IU	CWD3	86	IU	DLY4 (MSB)	116	O	OT16
27	IU	20/16	57	IU	CWD2	87	—	NC	117	O	OT17
28	IU	ZCS	58	IU	CWD1	88	O	AUXT	118	O	OT18
29	ID	Z3/4	59	IU	CWD0 (LSB)	89	O	UDT	119	O	OY19
30	ID	Z1/2	60	—	VDD	90	O	ADFT	120	—	VDD

U ; INPUT WITH PULL-UP REGISTER
D ; INPUT WITH PULL-DOWN REGISTER
OT ; TRI-STATE OUTPUT

INPUT (WITH PULL-DOWN REGISTER)

128CK	; DIGITAL AUDIO 128 x Fs CLOCK
AD1/2	; DIGITAL AUDIO CH-1/2 DATA
AD3/4	; DIGITAL AUDIO CH-3/4 DATA
BCK	; DIGITAL AUDIO BIT CLOCK (=64 x Fs)
C1/2	; DIGITAL AUDIO CH-1/2 CHANNEL STATUS BIT
C3/4	; DIGITAL AUDIO CH-3/4 CHANNEL STATUS BIT
$\overline{OEAUX}$	; OUTPUT ENABLE FOR AUX0–9 (L)
U1/2	; DIGITAL AUDIO CH-1/2 USER DATA BIT
U3/4	; DIGITAL AUDIO CH-3/4 USER DATA BIT
V1/2	; DIGITAL AUDIO CH-1/2 VALIDITY FLAG
V3/4	; DIGITAL AUDIO CH-3/4 VALIDITY FLAG
VCK	; VIDEO CLOCK (=4Fsc) INPUT
Z1/2	; DIGITAL AUDIO CH-1/2 BLOCK SYNC (Z-FLAG)
Z3/4	; DIGITAL AUDIO CH-3/4 BLOCK SYNC (Z-FLAG)

INPUT (WITH PULL-UP REGISTER)

20/16	; DIGITAL AUDIO 20BIT/16BIT SELECT
AFS	; DIGITAL AUDIO FORMAT SELECT
CHEX0, 1	; CHANNEL EXCHANGE 0, 1
$\overline{CHS1}$ - $\overline{CHS4}$	; AUDIO CH1–CH4 OUTPUT SELECT (L)
$\overline{CLR}$	; POWER ON CLEAR (L)
CWA0 - CWA3	; CHANNEL STATUS REGISTER WRITE ADDRESS 0 - 3
CWCK	; CHANNEL STATUS REGISTER WRITE CLOCK
CWD0 - CWD7	; CHANNEL STATUS REGISTER WRITE DATA 0 - 7
CWEN	; CHANNEL STATUS REGISTER WRITE ENABLE
D2/D1	; VIDEO FORMAT D2/D1 SELECT
DID0, 1	; DATA ID BIT0, 1
DIR	; DIGITAL AUDIO MSB FIRST/LSB FIRST SELECT
DLY0 - DLY4	; DELAY CONTROL BIT0 - BIT3
$\overline{IT1}$ - $\overline{IT5}$	; TEST (L)
LIM0, 1	; LINE MODE 0, 1
LRCK	; DIGITAL AUDIO L/R CLOCK (=Fs)
LRS	; DIGITAL AUDIO LEFT/RIGHT BIT POSITION SELECT
SYNC	; VIDEO SYNC INPUT
ZCS	; DIGITAL AUDIO Z-FLAG C-BIT SELECT

OUTPUT

ADBT	; AUX. DATA BLOCK TIMING
ADFT	; AUX. DATA FLAG TIMING
AUXT	; AUX. DATA TIMING
OT1 = OT19	; TEST
UDT	; USER DATA TIMING

OUTPUT (TRI-STATE)

AUX0 - AUX9	; AUX. DATA 0 - 9

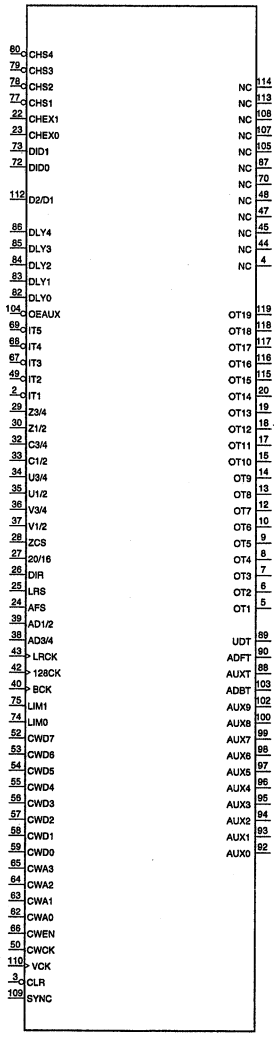

CXD8806R (SONY)

BIT REDUCTION ENCODER & ERROR CORRECTION CODER

—TOP VIEW—

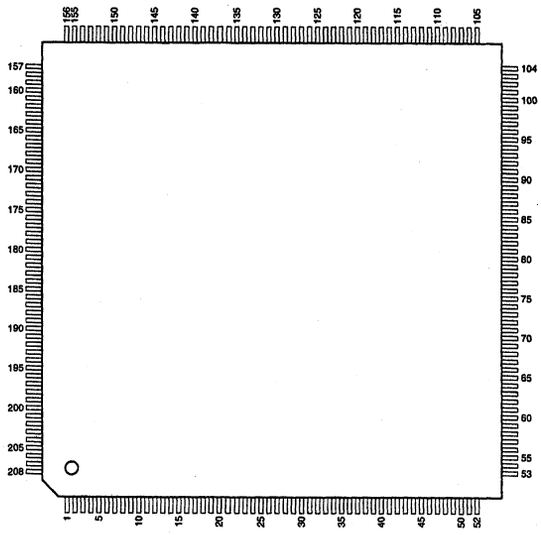

PIN NO.	I/O	SIGNAL	PIN NO.	I/O	SIGNAL	PIN NO.	I/O	SIGNAL	PIN NO.	I/O	SIGNAL
1	I/O	HDM16	53	O	OAOTM18	105	O	AE11	157	I	IACK
2	I/O	HDM17	54	—	VDD	106	O	AE12	158	I	RESETI
3	—	GND	55	—	GND	107	—	GND	159	I	IAV0
4	I/O	HDM18	56	I	STTSX0	108	O	AE13	160	I	IAV1
5	I/O	HDM19	57	I	STTSX1	109	O	AE14	161	I	IAF0
6	O	$\overline{OCS0}$	58	I	CSX	110	O	AE15	162	I	IAF1
7	O	$\overline{OCS1}$	59	I	STRBX	111	O	AE16	163	I	CNT1
8	O	$\overline{OCS4}$	60	—	GND	112	O	AE17	164	—	GND
9	I	TEST	61	—	VDD	113	O	AE18	165	—	VDD
10	—	VDD	62	I/O	DADX0	114	—	VDD	166	I	CNT2
11	O	$\overline{OCS2}$	63	I/O	DADX1	115	O	AE19	167	O	$\overline{OWEO}$
12	O	$\overline{OCS3}$	64	I/O	DADX2	116	O	AE20	168	I	IAF2
13	O	$\overline{OOEX}$	65	I/O	DADX3	117	O	AE21	169	I	IAF3
14	O	$\overline{OOE}$	66	I/O	DADX4	118	O	$\overline{OEE0}$	170	I	IREN
15	—	GND	67	I/O	DADX5	119	—	GND	171	I	IVD
16	O	$\overline{OWE0}$	68	I/O	DADX6	120	O	$\overline{OEE1}$	172	I	IHD
17	O	$\overline{OWE1}$	69	I/O	DADX7	121	I/O	BE0	173	I	IPRY
18	O	OWENM1	70	—	VDD	122	I/O	BE1	174	I	$\overline{ICFI}$
19	O	OWENM0	71	O	OTA0	123	I/O	BE2	175	I	$\overline{IWEI}$
20	—	VDD	72	—	GND	124	I/O	BE3	176	—	GND
21	I	IWENM1	73	O	OTA1	125	I/O	BE4	177	I	CKI
22	I	IWENM0	74	O	OTA2	126	I/O	BE5	178	I	IDIN0
23	—	GND	75	O	OTA3	127	I/O	BE6	179	I	IDIN1
24	O	OAOTM0	76	O	OTB0	128	I/O	BE7	180	I	IDIN2
25	O	OAOTM1	77	O	OTB1	129	I/O	BE8	181	I	IDIN3
26	—	GND	78	O	OTB2	130	—	GND	182	I	IDIN4
27	—	VDD	79	—	VDD	131	—	VDD	183	—	VDD
28	O	OAOTM2	80	O	OTB3	132	I/O	BE9	184	I	IDIN5
29	O	OAOTM3	81	O	ORCA	133	I/O	BE10	185	I	IDIN6
30	O	OAOTM4	82	O	ORCB	134	I/O	BE11	186	I	IDIN7
31	—	GND	83	O	ORCC	135	I/O	BE12	187	I	IDIN8
32	—	VDD	84	—	VDD	136	I/O	BE13	188	I	IDIN9
33	O	OAOTM5	85	—	GND	137	I/O	BE14	189	—	GND
34	O	OAOTM6	86	I	IPCK	138	I/O	BE15	190	I	$\overline{IRWI}$
35	—	GND	87	—	GND	139	O	OCRCOT	191	I/O	HDM0
36	O	OAOTM7	88	—	VDD	140	O	ORA1	192	I/O	HDM1
37	O	OAOTM8	89	O	ORCD	141	O	ORA2	193	I/O	HDM2
38	—	GND	90	O	OPRY	142	—	GND	194	I/O	HDM3
39	—	VDD	91	O	AE0	143	O	ORB1	195	I/O	HDM4
40	O	OAOTM9	92	O	AE1	144	O	ORB2	196	I/O	HDM5
41	O	OAOTM10	93	O	AE2	145	I	IRF0	197	I/O	HDM6
42	O	OAOTM11	94	O	AE3	146	I	IRF1	198	I/O	HDM7
43	—	VDD	95	I	$\overline{IOEE}$	147	—	VDD	199	I/O	HDM8
44	—	GND	96	—	GND	148	I	IRF2	200	—	GND
45	O	OAOTM12	97	—	VDD	149	I	IFLD	201	—	VDD
46	O	OAOTM13	98	O	AE4	150	I	ISG0	202	I/O	HDM9
47	O	OAOTM14	99	O	AE5	151	I	ISG1	203	I/O	HDM10
48	O	OAOTM15	100	O	AE6	152	I	IR2F	204	I/O	HDM11
49	—	VDD	101	O	AE7	153	I	IAD0	205	I/O	HDM12
50	—	GND	102	O	AE8	154	—	GND	206	I/O	HDM13
51	O	OAOTM16	103	O	AE9	155	I	IAFS	207	I/O	HDM14
52	O	OAOTM17	104	O	AE10	156	I	IAD1	208	I/O	HDM15

INPUTS

CKI	: 27 MHz CLOCK
CNT1, CNT2	: WRITE ENABLE DELAY CONTROL 1, 2
CSX	: SYSTEM CONTROL CHIP SELECT
IACK	: 64FS CLOCK
IAD0, IAD1	: AUDIO 1/2, 3/4 CHANNEL
IAF0 - IAF2	: AUDIO 5F0 - 5F2
IAF3	: AUDIO 5F PARITY
IAFS	: FS
IAV0, IAV1	: AUDIO V0, V1
ICFI	: CFI
IDIN0 - IDIN9	: INPUT DATA
IFLD	: REC ENABLE SELECT
IHD	: HD
$\overline{IOEE}$	: ECC MEMORY I/O CONTROL
IPCK	: 16 MHz CLOCK
IPRY	: PARITY
IR2F	: REFERENCE FRAME
IREN	: INTERNAL RAM ENABLE
IRF0, IRF2	: TRACK START FOR VIDEO 1, 2
IRF1	: TRACK START FOR AUDIO
$\overline{IRWI}$	: SHUFFLING MEMORY I/O CONTROL
ISG0, ISG1	: TRACK SEGMENT 0, 1
IVD	: VD
$\overline{IWEI}$	: WRITE ENABLE PULSE
IWENM0	: WRITE ENABLE WIDTH CONTROL
IWENM1	: WRITE ENABLE DELAY CONTROL
RESETI	: SYSTEM RESET
STRBX	: SYSTEM CONTROL STROBE
STTSX0, STTSX1	: SYSTEM CONTROL STATUS 0, 1
TEST	: IC TEST PIN

OUTPUTS

AE0 - AE21	: ECC MEMORY ADDRESS
OAOTM0 - OAOTM18	: SHUFFLING MEMORY ADDRESS
OCRCOT	: CRC VERIFY
$\overline{OCS0}$ - $\overline{OCS3}$	: SHUFFLING MEMORY CHIP SELECT 0 - 3 FOR 1M
$\overline{OCS4}$	: SHUFFLING MEMORY CHIP SELECT FOR 4M
$\overline{OEE0}$	: ECC MEMORY I/O CONTROL
$\overline{OEE1}$	: ECC MEMORY OUTPUT ENABLE
$\overline{OOE}$	: SHUFFLING MEMORY OUTPUT ENABLE
$\overline{OOEX}$	: SHUFFLING MEMORY I/O CONTROL OUT 1
OPRY	: RF ENABLE
ORA1, ORB1	: TRACK END FOR AC, BD CHANNEL VIDEO 0
ORA2, ORB2	: TRACK END FOR AC, BD CHANNEL AUDIO
ORCA, ORCB, ORCC, ORCD	: REC ENABLE A, B, C, D
OTA0 - OTA3	: AC CHANNEL RF 0 - 3
OTB0 - OTB3	: BD CHANNEL RF 0 - 3
$\overline{OWE0}$	: SHUFFLING MEMORY WRITE ENABLE
$\overline{OWE1}$	: SHUFFLING MEMORY I/O CONTROL OUT 2
OWENM0	: WRITE ENABLE WIDTH CONTROL
OWENM1	: WRITE ENABLE DELAY CONTROL
$\overline{OWEO}$	: WRITE ENABLE

INPUTS/OUTPUTS

BE0 - BE15	: ECC MEMORY I/O
DADX0 - DADX7	: SYSTEM CONTROL BUS
HDM0 - HDM19	: SHUFFLING MEMORY

CXD8807BR (SONY)

BIT REDUCTION DECODER & VIDEO ERROR CONCEALMENT

—TOP VIEW—

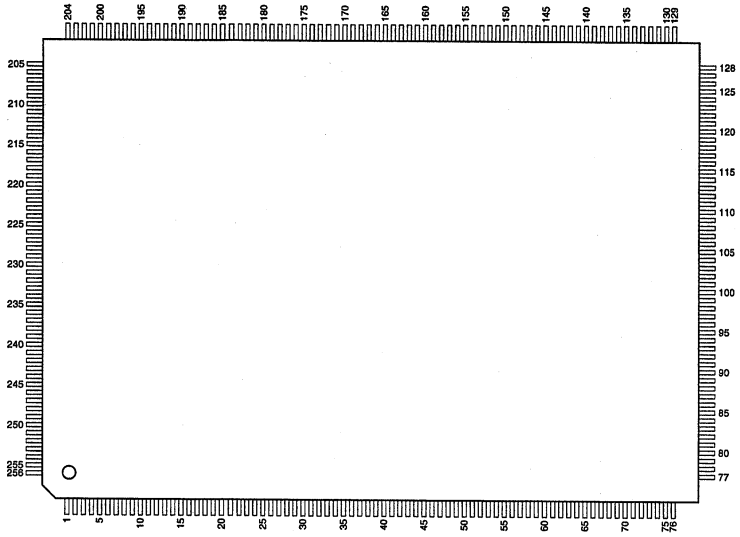

PIN NO.	I/O	SIGNAL	PIN NO.	I/O	SIGNAL	PIN NO.	I/O	SIGNAL	PIN NO.	I/O	SIGNAL
1	I/O	DADX0	65	—	GND	129	I	FFYI0 7	193	—	GND
2	I/O	DADX1	66	—	VDD	130	I	FFCI0 0	194	—	VDD
3	I/O	DADX2	67	O	$\overline{OWE1}$	131	I	FFCI0 1	195	O	VCL2R2
4	—	NC	68	O	OWENM1	132	—	NC	196	O	VCL2W
5	—	NC	69	O	OWENM0	133	—	NC	197	O	OCFOO
6	I/O	DADX3	70	I	IWENM1	134	I	FFCI0 2	198	O	OVD
7	I/O	DADX4	71	I	IWENM0	135	I	FFCI0 3	199	O	OHD
8	I/O	DADX5	72	—	NC	136	I	FFCI0 4	200	O	AUXRDY
9	I/O	DADX6	73	—	NC	137	I	FFCI0 5	201	—	NC
10	I/O	DADX7	74	I/O	HDM0	138	O	$\overline{FFWEN}$	202	O	OCFIF
11	—	GND	75	I/O	HDM1	139	—	GND	203	O	OVPRY
12	—	VDD	76	I/O	HDM2	140	—	VDD	204	O	OVDT0
13	I	STTSX0	77	I/O	HDM3	141	I	FFCI0 6	205	O	OVDT1
14	I	STTSX1	78	I/O	HDM4	142	I	FFCI0 7	206	O	OVDT2
15	I	CSX	79	—	GND	143	O	VCL1W	207	—	GND
16	I	STRBX	80	—	VDD	144	O	VCL1R	208	—	VDD
17	—	GND	81	I/O	HDM5	145	O	FFYO0	209	O	OVDT3
18	—	VDD	82	I/O	HDM6	146	O	FFYO1	210	O	OVDT4
19	I	TEST	83	I/O	HDM7	147	O	FFYO2	211	O	OVDT5
20	O	OAOTM0	84	I/O	HDM8	148	O	FFYO3	212	O	OVDT6
21	—	GND	85	I/O	HDM9	149	O	FFYO4	213	O	OVDT7
22	O	OAOTM1	86	I/O	HDM10	150	O	FFYO5	214	O	OVDT8
23	O	OAOTM2	87	I/O	HDM11	151	O	FCCK	215	O	OVDT9
24	—	GND	88	I/O	HDM12	152	—	GND	216	O	OWEO
25	—	VDD	89	I	$\overline{IRWI}$	153	—	VDD	217	I	CNT2
26	O	OAOTM3	90	—	GND	154	O	FFYO6	218	—	GND
27	O	OAOTM4	91	—	VDD	155	O	FFYO7	219	—	VDD
28	—	GND	92	I/O	HDM13	156	O	FFCO0	220	—	NC
29	O	OAOTM5	93	I/O	HDM14	157	O	FFCO1	221	—	NC
30	O	OAOTM6	94	I/O	HDM15	158	O	FFCO2	222	—	NC
31	—	GND	95	I/O	HDM16	159	O	FFCO3	223	I	IREN
32	—	VDD	96	I/O	HDM17	160	O	FFCO4	224	I	RESETI
33	O	OAOTM7	97	I/O	HDM18	161	O	FFCO5	225	—	VDD
34	O	OAOTM8	98	I/O	HDM19	162	O	FFCO6	226	I	IDESY
35	—	GND	99	I	IADVV	163	O	FFCO7	227	I	IDEPRY
36	O	OAOTM9	100	I	ICRCIN	164	O	VCLOW	228	I	IDEEF
37	O	OAOTM10	101	I	FFYI1 0	165	—	VDD	229	I	IWEI
38	—	GND	102	—	GND	166	—	GND	230	—	GND
39	—	VDD	103	I	FFYI1 1	167	O	VCLOR2	231	I	CKI
40	O	OAOTM11	104	I	FFYI1 2	168	O	VCLOR1Y	232	I	IDED0
41	O	OAOTM12	105	I	FFYI1 3	169	O	VCLOR1C	233	I	IDED1
42	—	GND	106	I	FFYI1 4	170	I	FFLI0 0	234	I	IDED2
43	O	OAOTM13	107	I	FFYI1 5	171	I	FFLI0 1	235	I	IDED3
44	O	OAOTM14	108	I	FFYI1 6	172	I	FFLI0 2	236	I	IDED4
45	—	VDD	109	I	FFYI1 7	173	I	FFLI0 3	237	I	IDED5
46	—	GND	110	I	FFCI1 0	174	I	FFLI1 0	238	I	IDED6
47	O	OAOTM15	111	I	FFCI1 1	175	I	FFLI1 1	239	I	IDED7
48	O	OAOTM16	112	I	FFCI1 2	176	I	FFLI1 2	240	I	IPPSY
49	—	GND	113	I	FFCI1 3	177	I	FFLI1 3	241	I	CNT1
50	O	OAOTM17	114	—	GND	178	I	FFLI1 4	242	—	GND
51	O	OAOTM18	115	—	VDD	179	I	FFLI1 5	243	—	VDD
52	—	GND	116	I	FFCI1 4	180	—	GND	244	I	IPPPRY
53	—	VDD	117	I	FFCI1 5	181	—	VDD	245	I	IPPEF
54	O	OOEX	118	I	FFCI1 6	182	I	FFLI1 6	246	I	IPPD0
55	O	$\overline{OOE}$	119	I	FFCI1 7	183	I	FFLI1 7	247	I	IPPD1
56	—	GND	120	I	FFYI0 0	184	O	FFLO0	248	I	IPPD2
57	—	VDD	121	I	FFYI0 1	185	O	FFLO1	249	I	IPPD3
58	O	$\overline{OCS4}$	122	I	FFYI0 2	186	O	FFLO2	250	I	IPPD4
59	O	$\overline{OCS3}$	123	I	FFYI0 3	187	O	FFLO3	251	I	IPPD5
60	—	GND	124	I	FFYI0 4	188	O	FFLO4	252	I	ICKHI
61	O	$\overline{OCS2}$	125	—	GND	189	O	FFLO5	253	—	GND
62	O	$\overline{OCS1}$	126	—	VDD	190	O	FFLO6	254	—	VDD
63	O	$\overline{OCS0}$	127	I	FFYI0 5	191	O	FFLO7	255	I	IPPD6
64	O	$\overline{OWE0}$	128	I	FFYI0 6	192	O	VCL2R1	256	I	IPPD7

INPUTS

CKI	: 27 MHz CLOCK
CNT1, CNT2	: WRITE ENABLE DELAY CONTROL 1, 2
CSX	: SYSTEM CONTROL CHIP SELECT
FFCI0 0 - FFCI0 7	: CONCEAL MEMORY 0C
FFCI1 0 - FFCI1 7	: CONCEAL MEMORY 1C
FFLI0 0 - FFLI0 3	: CONCEAL MEMORY 2 IN 0
FFLI1 0 - FFLI1 7	: CONCEAL MEMORY 2 IN 1
FFYI0 0 - FFYI0 7	: CONCEAL MEMORY 0Y
FFYI1 0 - FFYI1 7	: CONCEAL MEMORY 1Y
IADVV	: READ START V
ICKHI	: 13.5 MHz CLOCK
ICRCIN	: VERIFY CRC
IDED0 - IDED7	: A CHANNEL INPUT DATA
IDEEF, IPPEF	: A, B CHANNEL INPUT ERROR FLAG
IDEPRY, IPPPRY	: A, B CHANNEL INPUT PARITY
IDESY, IPPSY	: A, B CHANNEL INPUT SYNC
IPPD0 - IPPD7	: B CHANNEL INPUT DATA
IREN	: INTERNAL RAM ENABLE
$\overline{IRWI}$	: SHUFFLING MEMORY I/O CONTROL
IWEI	: WRITE ENABLE PULSE
IWENM0	: WRITE ENABLE WIDTH CONTROL
IWENM1	: WRITE ENABLE DELAY CONTROL
RESETI	: SYSTEM RESET
STRBX	: SYSTEM STROBE
STTSX0, STTSX1	: SYSTEM CONTROL STATUS 0, 1
TEST	: IC TEST PIN

OUTPUTS

AUXRDY	: AUX DATA READ ENABLE
FCCK	: CONCEAL MEMORY CLOCK
FFCO0 - FFCO7	: CONCEAL MEMORY 0C
FFLO0 - FFLO7	: CONCEAL MEMORY 2 OUT
$\overline{FFWEN}$	: CONCEAL MEMORY WRITE ENABLE
FFYO0 - FFYO7	: CONCEAL MEMORY 0Y
OAOTM0 - OAOTM18	: SHUFFLING MEMORY ADDRESS
OCFOO	: ADVANCED CFO
OCFIF	: CFI
OHD	: HD
$\overline{OOE}$	: SHUFFLING MEMORY OUTPUT ENABLE
OOEX	: SHUFFLING MEMORY I/O CONTROL OUT 1
$\overline{OCS0}$ - $\overline{OCS3}$	: SHUFFLING MEMORY CHIP SELECT 0 - 3 FOR 1M
$\overline{OCS4}$	: SHUFFLING MEMORY CHIP SELECT FOR 4M
OVD	: VD
OVDT0 - OVDT9	: OUTPUT DATA
OVPRY	: PARITY
$\overline{OWE0}$	: SHUFFLING MEMORY WRITE ENABLE
$\overline{OWE1}$	: SHUFFLING MEMORY I/O CONTROL OUT 2
OWENM0	: WRITE ENABLE WIDTH CONTROL
OWENM1	: WRITE ENABLE DELAY CONTROL
OWEO	: WRITE ENABLE
VCL1R	: CONCEAL MEMORY RESET READ
VCL1W	: CONCEAL MEMORY RESET WRITE
VCL2R1, VCL2R2	: CONCEAL MEMORY 2 RESET READ 1, 2
VCL2W	: CONCEAL MEMORY 2 RESET WRITE
VCLOR1C, VCLOR1Y	: CONCEAL MEMORY OC, OY RESET READ 1
VCLOR2	: CONCEAL MEMORY 0 RESET READ 2
VCLOW	: CONCEAL MEMORY 0 RESET WRITE

INPUTS/OUTPUTS

DADX0 - DADX7	: SYSTEM CONTROL BUS
HDM0 - HDM19	: SHUFFLING MEMORY

CXD8815Q (SONY)

C-MOS VITERBI DECODER

—TOP VIEW—

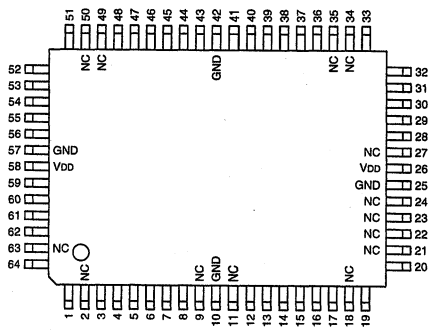

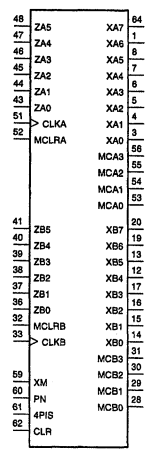

CHANNEL A
- CLKA ; CLOCK OF CHANNEL A
- MCA0 - 3 ; 4 BIT METRIC COUNTER OF CHANNEL A
- MCLRA ; METRIC COUNTER CLEAR OF CHANNEL A
- XA0 - 7 ; 8 BIT CHANNEL A OUT
- ZA0 - 5 ; 6 BIT CHANNEL A IN

CHANNEL B
- CLKB ; CLOCK OF CHANNEL B
- MCB0 - 3 ; 4 BIT METRIC COUNTER OF CHANNEL B
- MCLRB ; METRIC COUNTER CLEAR OF CHANNEL B
- XB0 - 7 ; 8 BIT CHANNEL B OUT
- ZB0 - 5 ; 6 BIT CHANNEL B IN

OTHERS
- CLR ; ALL CLEAR
- PN ; SELECTOR OF PR (1, 0, -1) & NRZ
- XM ; SELECTOR OF DECODE & METRIC OUT
- 4PIS ; SELECTOR OF 4 PARALLEL & SERIAL DATA

PIN No.	I/O	SIGNAL	PIN No.	I/O	SIGNAL	PIN No.	I/O	SIGNAL	PIN No.	I/O	SIGNAL
1	OUT	XA6	17	OUT	XB3	33	IN	CLKB	49	—	NC
2	—	NC	18	—	NC	34	—	NC	50	—	NC
3	OUT	XA0	19	OUT	XB6	35	—	NC	51	IN	CLKA
4	OUT	XA1	20	OUT	XB7	36	IN	ZB0	52	IN	MCLRA
5	OUT	XA2	21	—	NC	37	IN	ZB1	53	OUT	MCA0
6	OUT	XA3	22	—	NC	38	IN	ZB2	54	OUT	MCA1
7	OUT	XA4	23	—	NC	39	IN	ZB3	55	OUT	MCA2
8	OUT	XA5	24	—	NC	40	IN	ZB4	56	OUT	MCA3
9	—	NC	25	—	GND	41	IN	ZB5	57	—	GND
10	—	GND	26	—	VDD	42	—	GND	58	—	VDD
11	—	NC	27	—	NC	43	IN	ZA0	59	IN	XM
12	OUT	XB4	28	OUT	MCB0	44	IN	ZA1	60	IN	PN
13	OUT	XB5	29	OUT	MCB1	45	IN	ZA2	61	IN	4P1S
14	OUT	XB0	30	OUT	MCB2	46	IN	ZA3	62	IN	CLR
15	OUT	XB1	31	OUT	MCB3	47	IN	ZA4	63	—	NC
16	OUT	XB2	32	IN	MCLRB	48	IN	ZA5	64	OUT	XA7

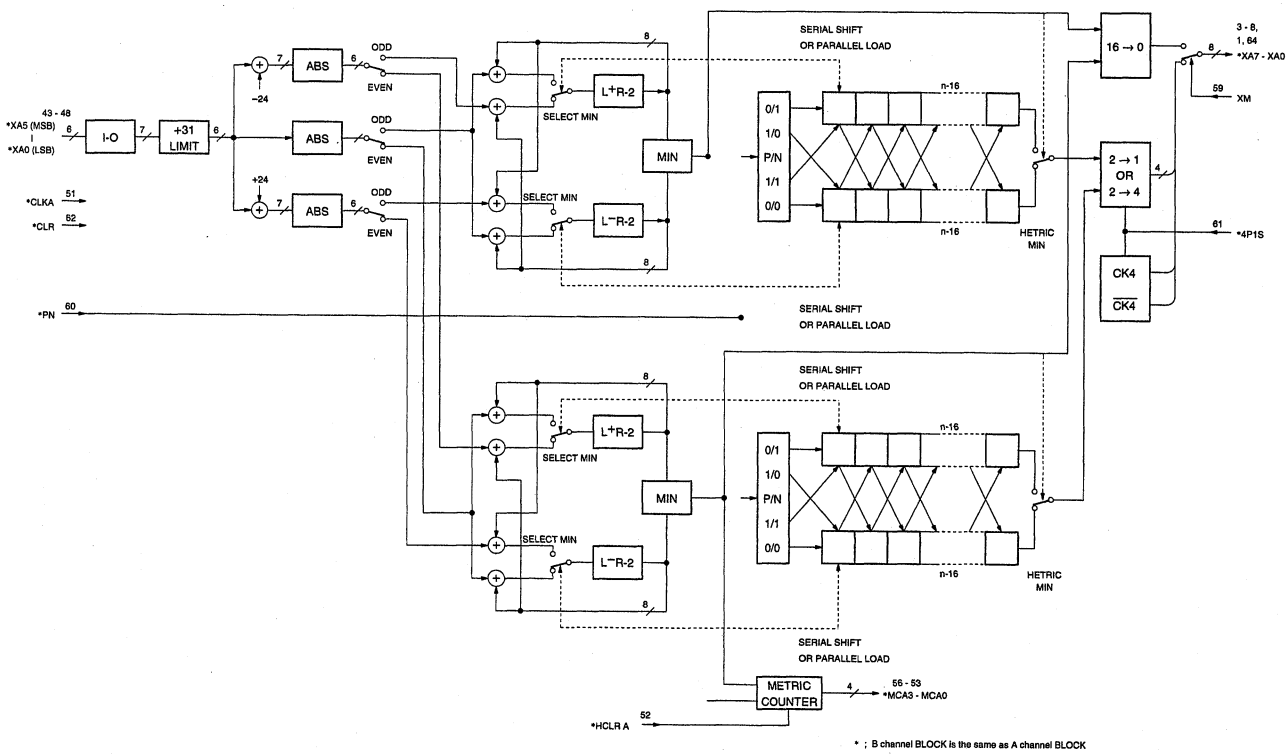

* ; B channel BLOCK is the same as A channel BLOCK

CXD8820AR (SONY)

C-MOS VITC READER GENERATOR

—TOP VIEW—

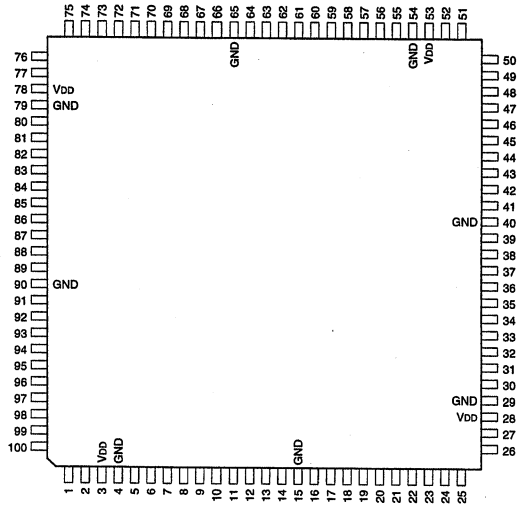

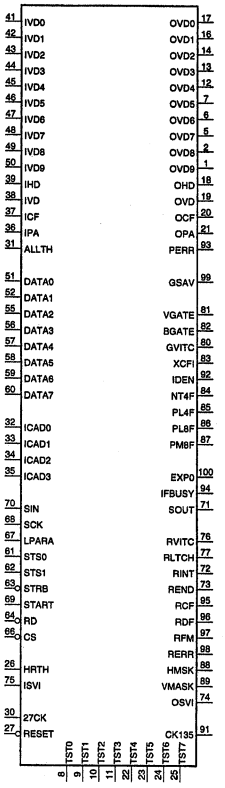

PIN NO.	I/O	SIGNAL	PIN NO.	I/O	SIGNAL	PIN NO.	I/O	SIGNAL	PIN NO.	I/O	SIGNAL
1	O	OVD9	26	I	HRTH	51	I/O	DATA0	76	O	RVITC
2	O	OVD8	27	I	RESET	52	I/O	DATA1	77	O	RLTCH
3	—	VDD	28	—	VDD	53	—	VDD	78	—	VDD
4	—	GND	29	—	GND	54	—	GND	79	—	GND
5	O	OVD7	30	I	27CK	55	I/O	DATA2	80	O	GVITC
6	O	OVD6	31	I	ALLTH	56	I/O	DATA3	81	O	VGATE
7	O	OVD5	32	I	ICAD0	57	I/O	DATA4	82	O	BGATE
8	I	TST0	33	I	ICAD1	58	I/O	DATA5	83	O	XCFI
9	I	TST1	34	I	ICAD2	59	I/O	DATA6	84	O	NT4F
10	I	TST2	35	I	ICAD3	60	I/O	DATA7	85	O	PL4F
11	I	TST3	36	I	IPA	61	I	STS0	86	O	PL8F
12	O	OVD4	37	I	ICF	62	I	STS1	87	O	PM8F
13	O	OVD3	38	I	IVD	63	I	STRB	88	O	HMSK
14	O	OVD2	39	I	IHD	64	I	RD	89	O	VMASK
15	—	GND	40	—	GND	65	—	GND	90	—	GND
16	O	OVD1	41	I	IVD0	66	I	CS	91	O	CK135
17	O	OVD0	42	I	IVD1	67	I	LPARA	92	O	IDEN
18	O	OHD	43	I	IVD2	68	I	SCK	93	O	PERR
19	O	OVD	44	I	IVD3	69	I	START	94	O	IFBUSY
20	O	OCF	45	I	IVD4	70	I	SIN	95	O	RCF
21	O	OPA	46	I	IVD5	71	O	SOUT	96	O	RDF
22	I	TST4	47	I	IVD6	72	O	RINT	97	O	RFM
23	I	TST5	48	I	IVD7	73	O	REND	98	O	RERR
24	I	TST6	49	I	IVD8	74	O	OSVI	99	O	G SAV
25	I	TST7	50	I	IVD9	75	I	ISVI	100	O	EXP0

INPUT

27CK	: 27 MHz CLOCK
ALLTH	: ALL THOUGH MODE
CS	: CHIP SELECT (FOR PARALLEL INTERFACE)
HRTH	: READER THOUGH MODE
ICAD0 - ICAD3	: IC ADDRESS
ICF	: COLOR FRAMING
IHD	: HD
IPA	: PARITY
ISVI	: SLICED VITC
IVD0 - IVD9	: VIDEO DATA
IVD	: VD
LPARA	: PARARELL INTERFACE SELECT
RD	: READ (FOR PARALLEL INTERFACE)
RESET	: POWER ON RESET
SCK	: SERIAL INTERFACE CLOCK
SIN	: SERIAL DATA
START	: SERIAL INTERFACE START
STRB	: STROBE (FOR PARALLEL INTERFACE)
STS0, STS1	: STATUS 0, 1 (FOR PARALLEL INTERFACE)
TST0 - TST7	: FOR TEST 0-7

OUTPUT

BGATE	: BLANKING LINE PULSE
CK135	: 13.5 MHz CLOCK
EXP0	: EXPANDED OUTPUT PORT
GSAV	: (G) SAV PULSE
GVITC	: GNENRATED VITC
HMSK	: (R) VITC SEARCH LINE
IDEN	: IC INTERFACE ENABLE
IFBUSY	: INTERFACE BUSY
NT4F	: NTSC 4FIELD
OCF	: COLOR FRAMING
OHD	: HD
OPA	: PARITY
OSVI	: SLICED VITC
OVD0 - OVD9	: VIDEO DATA
OVD	: VD
PERR	: PARITY ERROR
PL4F	: PAL 4FIELD
PL8F	: PAL 8FIELD
PM8M	: PALM 8FIELD
RCF	: READ COLOR FRAME BIT
RDF	: READ DROP FRAME BIT
REND	: READ END
RERR	: READ ERROR SIGNAL
RFM	: READ FEILD MARK BIT
RINT	: READ END INTERRUPT
RLTCH	: READ VITC LATCH PULSE
RVITC	: READ VITC
SOUT	: SERIAL DATA
VGATE	: INSERT LINE PULSE
VMASK	: (R) EAV_SAV MASK PULSE
XCFI	: COLOR FRAMING INFORMATION

INPUT/OUTPUT

DATA0 - DATA7 : PARARELL INTERFACE DATA BUS

CXD8821Q (SONY)

C-MOS AUDIO TIMING GENERATOR

—TOP VIEW—

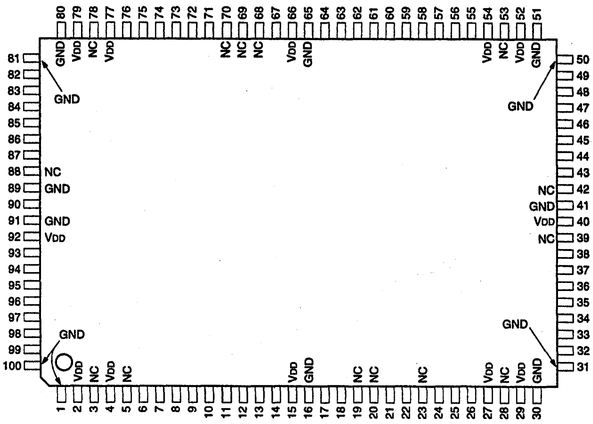

PIN No.	I/O	SIGNAL	PIN No.	I/O	SIGNAL	PIN No.	I/O	SIGNAL	PIN No.	I/O	SIGNAL
1	—	GND	26	I	T1	51	—	GND	76	O	DCK2
2	—	VDD	27	—	VDD	52	—	VDD	77	—	VDD
3	—	NC	28	—	NC	53	—	NC	78	—	NC
4	—	VDD	29	—	VDD	54	—	VDD	79	—	VDD
5	—	NC	30	—	GND	55	I	CRN	80	—	GND
6	O	FA2	31	—	GND	56	I	CFPI	81	—	GND
7	O	FA1	32	O	DE0	57	I	SA0	82	O	HD2
8	O	FA0	33	O	DE7	58	I	SA1	83	O	VD2
9	O	PC2	34	O	DE8	59	I	SA2	84	O	CF2
10	O	PC1	35	O	FP0	60	I	SA3	85	O	HD3
11	O	PC0	36	O	FP5	61	I	SCK	86	O	VD3
12	O	LOCK	37	O	FP6	62	I	STB	87	O	CF3
13	O	FREF	38	O	FP7	63	I	SI	88	—	NC
14	O	FCOMP	39	—	NC	64	O	SO	89	—	GND
15	—	VDD	40	—	VDD	65	—	GND	90	I	CLK
16	—	GND	41	—	GND	66	—	VDD	91	—	GND
17	I	FSCK	42	—	NC	67	O	TO	92	—	VDD
18	I	FPCK	43	O	FP8	68	—	NC	93	O	DCK4
19	—	NC	44	O	FS0	69	—	NC	94	O	HD4
20	—	NC	45	O	FS5	70	—	NC	95	O	VD4
21	I	ACS	46	O	FS6	71	O	HD0	96	O	CF4
22	I	INCF	47	O	FS7	72	O	VD0	97	O	HD5
23	—	NC	48	O	FS8	73	O	FOE1	98	O	VD5
24	I	T3	49	O	FS9	74	O	HD1	99	O	CF5
25	I	T2	50	—	GND	75	O	VD1	100	—	GND

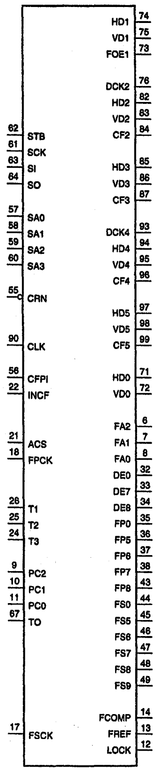

INPUT

ACS : H: 48 kHz AUDIO L: 44.1 kHz AUDIO
CFPI : INPUT CF PULSE
CLK : CLOCK
CRN : POWER ON RESET
FPCK : AUDIO CLOCK (256FS) FOR PROGRAM PLAY
FSCK : AUDIO CLOCK (512FS)
INCF : CF SIGNAL FOR VD2 REFORMING
SA0 – 3 : SERIAL PRESET ADDRESS
SCK : SERIAL CLOCK
SI : SERIAL INPUT DATA
STB : SERIAL START PULSE
T1 – T3 : TEST PIN FOR IC

OUTPUT

CF2 : CF INFORMATION PULSE OF THE #2 GROUP (PROGRAMABLE)
CF3 : CF INFORMATION PULSE OF THE #3 GROUP (PROGRAMABLE)
CF4 : CF INFORMATION PULSE OF THE #4 GROUP (PROGRAMABLE)
CF5 : CF INFORMATION PULSE OF THE #5 GROUP (PROGRAMABLE)
DCK2 : 13.5 MHz CLOCK OF THE #2 GROUP (PROGRAMABLE)
DCK4 : 13.5 MHz CLOCK OF THE #4 GROUP (PROGRAMABLE)
DE0 – 8 : AUDIO CLOCK FOR PITCH CONTROL
FA0 – 2 : AUDIO 5-FIELD SEQ. ID
FCOMP : AUDIO CLOCK FOR PLL
FOE1 : ODD/EVEN SIGNAL OF THE #1 GROUP (PROGRAMABLE)
FP0 – 8 : AUDIO CLOCK FOR PROGRAM PLAY
FREF : REFERENCE CLOCK FOR AUDIO PLL
FS0 – 9 : AUDIO CLOCK (FS9 : 512FS)
HD0 : HD PULSE (UNPROGRAMABLE)
HD1 : HD PULSE OF THE #1 GROUP (PROGRAMABLE)
HD2 : HD PULSE OF THE #2 GROUP (PROGRAMABLE)
HD3 : HD PULSE OF THE #3 GROUP (PROGRAMABLE)
HD4 : HD PULSE OF THE #4 GROUP (PROGRAMABLE)
HD5 : HD PULSE OF THE #5 GROUP (PROGRAMABLE)
LOCK : AUDIO PLL LOCK DET
PC0 – 2 : TEST PIN FOR IC
SO : SERIAL OUTPUT DATA
TO : TEST PIN FOR IC
VD0 : VD PULSE (UNPROGRAMABLE)
VD1 : VD PULSE OF THE #1 GROUP (PROGRAMABLE)
VD2 : VD PULSE OF THE #2 GROUP (PROGRAMABLE)
VD3 : VD PULSE OF THE #3 GROUP (PROGRAMABLE)
VD4 : VD PULSE OF THE #4 GROUP (PROGRAMABLE)
VD5 : VD PULSE OF THE #5 GROUP (PROGRAMABLE)

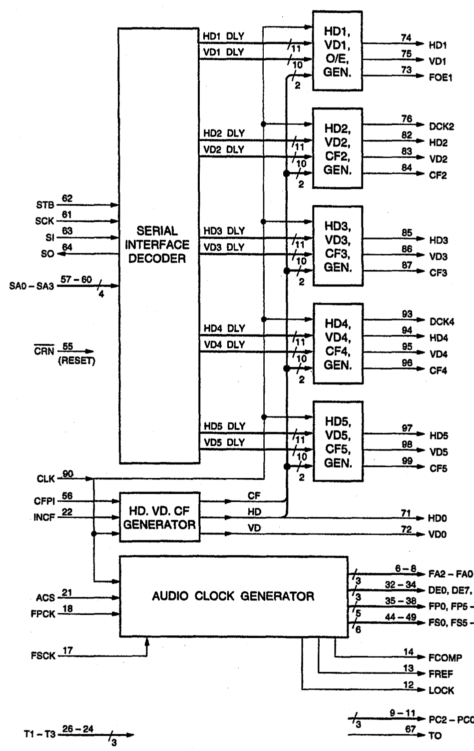

CXD8928R (SONY)

C-MOS INNER ERROR CORRECTION DECODER

—TOP VIEW—

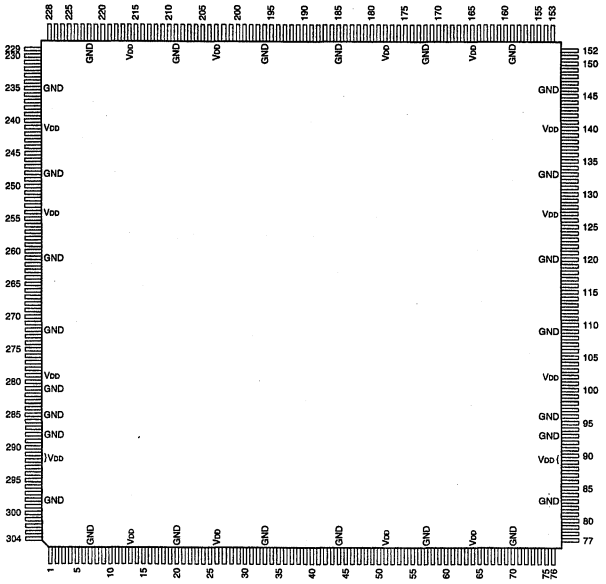

PIN No.	I/O	SIGNAL	PIN No.	I/O	SIGNAL	PIN No.	I/O	SIGNAL	PIN No.	I/O	SIGNAL	PIN No.	I/O	SIGNAL
1	I	ADVDB4	62	I	REC	123	I/O	MEMA1D1	184	O	VADATA4	245	O	MB2AD2
2	I	CNFDB0	63	O	DHBDSW	124	I/O	MEMA1D2	185	—	GND	246	O	MB2AD1
3	I	CNVDB1	64	—	VDD	125	I/O	MEMA1D3	186	O	VADATA5	247	O	MB2AD0
4	I	CNFDB2	65	I	ADVDA0	126	I/O	MEMA1D4	187	O	VADATA6	248	—	GND
5	I	CNFDB3	66	I	ADVDA1	127	—	VDD	188	O	VADATA7	249	I	WECN2
6	I	CNFDB4	67	I	ADVDA2	128	I/O	MEMA1D5	189	O	VADATA8	250	O	MBWE
7	—	GND	68	I	ADVDA3	129	I/O	MEMA1D6	190	O	F5	251	I/O	MEMB1D7
8	I	RECDB0	69	I	ADVDA4	130	I/O	MEMA1D7	191	O	AUAXS	252	I/O	MEMB1D6
9	I	RECDB1	70	—	GND	131	O	MAWE	192	O	AUCH	253	I/O	MEMB1D5
10	I	RECDB2	71	I	CNFDA0	132	I	WECN1	193	O	AUSYNC	254	—	VDD
11	I	RECDB3	72	I	CNFDA1	133	—	GND	194	O	AUST	255	I/O	MEMB1D4
12	I	RECDB4	73	I	CNFDA2	134	O	MA2AD0	195	O	VAPRITY	256	I/O	MEMB1D3
13	—	VDD	74	I	CNFDA3	135	O	MA2AD1	196	—	GND	257	I/O	MEMB1D2
14	O	FS5F0	75	I	CNFDA4	136	O	MA2AD2	197	I/O	MAXB	258	I/O	MEMB1D1
15	O	FS5F1	76	I	RECDA0	137	O	MA2AD3	198	I/O	STLBD0	259	I/O	MEMB1D0
16	O	FS5F2	77	I	RECDA1	138	O	MA2AD4	199	I/O	STLBD1	260	O	MB1AD16
17	O	FSPRTY	78	I	RECDA2	139	O	MA2AD5	200	I/O	STLBD2	261	—	GND
18	O	RST	79	I	RECDA3	140	—	VDD	201	I/O	STLBD3	262	O	MB1AD15
19	I/O	SYSIO0	80	I	RECDA4	141	O	MA2AD6	202	I/O	STLBD4	263	O	MB1AD14
20	—	GND	81	I	ADVSWA	142	O	MA2AD7	203	—	VDD	264	O	MB1AD13
21	I/O	SYSIO1	82	I	ADVCKA	143	O	MA2AD8	204	I/O	STLBD5	265	O	MB1AD12
22	I/O	SYSIO2	83	—	GND	144	O	MA2AD9	205	I/O	STLBD6	266	O	MB1AD11
23	I/O	SYSIO3	84	I	CNFCKA	145	O	MA2AD10	206	I/O	STLBD7	267	O	MB1AD10
24	I/O	SYSIO4	85	I	TGTP1	146	—	GND	207	I/O	STLBD8	268	O	MB1AD9
25	I/O	SYSIO5	86	I	TGTP2	147	O	MA2AD11	208	I/O	MAXA	269	O	MB1AD8
26	—	VDD	87	I	TGTP3	148	O	MA2AD12	209	—	GND	270	O	MB1AD7
27	I/O	SYSIO6	88	I	CNFSWA	149	O	MA2AD13	210	I/O	STLAD0	271	O	MB1AD6
28	I/O	SYSIO7	89	—	VDD	150	O	MA2AD14	211	I/O	STLAD1	272	—	GND
29	I	GCTL0	90	—	VDD	151	O	MA2AD15	212	I/O	STLAD2	273	O	MB1AD5
30	I	GCTL1	91	I	XMM	152	O	MA2AD16	213	I/O	STLAD3	274	O	MB1AD4
31	I	GCTL2	92	I	MCK	153	I/O	MEMA2D0	214	I/O	STLAD4	275	O	MB1AD3
32	I	GCTL3	93	—	GND	154	I/O	MEMA2D1	215	I/O	STLAD5	276	O	MB1AD2
33	—	GND	94	I	RECSWA	155	I/O	MEMA2D2	216	—	VDD	277	O	MB1AD1
34	I	GCTL4	95	I	RECCKA	156	I/O	MEMA2D3	217	I/O	STLAD6	278	O	MB1AD0
35	I	GCTL5	96	—	GND	157	I/O	MEMA2D4	218	I/O	STLAD7	279	—	VDD
36	I	STRB	97	O	WST1	158	I/O	MEMA2D5	219	I/O	STLAD8	280	O	MWR2
37	I	SCS	98	I	REFV	159	—	GND	220	I/O	MEMB2D7	281	—	GND
38	I	STAT0	99	I	REFVP	160	I/O	MEMA2D6	221	I/O	MEMB2D6	282	I	CHSL
39	I	STAT1	100	I	SYTEST	161	I/O	MEMA2D7	222	—	GND	283	I	STTP
40	I	CHIPID0	101	O	MWR1	162	I/O	DREFIO	223	I/O	MEMB2D5	284	O	WST2
41	I	CHIPID1	102	—	VDD	163	I/O	WRIO	224	I/O	MEMB2D4	285	—	GND
42	I	GTEST	103	O	MA1AD0	164	O	VPRITY	225	I/O	MEMB2D3	286	I	RECCKB
43	I	RST3	104	O	MA1AD1	165	—	VDD	226	I/O	MEMB2D2	287	I	RECSWB
44	—	GND	105	O	MA1AD2	166	O	VBLK	227	I/O	MEMB2D1	288	—	GND
45	O	REVO	106	O	MA1AD3	167	O	VSYNC	228	I/O	MEMB2D0	289	I	PCK
46	O	JUMPO	107	O	MA1AD4	168	O	VVST	229	O	MB2AD16	290	I	MS
47	O	SHTLO	108	O	MA1AD5	169	O	VDATA0	230	O	MB2AD15	291	—	VDD
48	O	SEG0	109	—	GND	170	O	VDATA1	231	O	MB2AD14	292	—	VDD
49	O	SEG1	110	O	MA1AD6	171	O	VDATA2	232	O	MB2AD13	293	I	CNFSWB
50	O	F0	111	O	MA1AD7	172	—	GND	233	O	MB2AD12	294	I	REV
51	—	VDD	112	O	MA1AD8	173	O	VDATA3	234	O	MB2AD11	295	I	JUMP
52	O	TRREF	113	O	MA1AD9	174	O	VDATA4	235	—	GND	296	I	PULLTST
53	O	NOSIGO	114	O	MA1AD10	175	O	VDATA5	236	O	MB2AD10	297	I	CNFCKB
54	O	ACSY	115	O	MA1AD11	176	O	VDATA6	237	O	MB2AD9	298	—	GND
55	O	BDSY	116	O	MA1AD12	177	O	VDATA7	238	O	MB2AD8	299	I	ADVCKB
56	I	RST1	117	O	MA1AD13	178	—	VDD	239	O	MB2AD7	300	I	ADVSWB
57	—	GND	118	O	MA1AD14	179	O	VDATA8	240	O	MB2AD6	301	I	ADVDB0
58	I	RST2	119	O	MA1AD15	180	O	VADATA0	241	—	VDD	302	I	ADVDB1
59	O	ACEF	120	—	GND	181	O	VADATA1	242	O	MB2AD5	303	I	ADVDB2
60	O	BDEF	121	O	MA1AD16	182	O	VADATA2	243	O	MB2AD4	304	I	ADVDB3
61	O	MON	122	I/O	MEMA1D0	183	O	VADATA3	244	O	MB2AD3			

INPUT

ADVCKA, ADVCKB	; ADVANCE A/C, B/D CH CLOCK
ADVDA0 - ADVDA4, ADVDB0 - ADVDB4	; ADVANCE A/C, B/D CH DATA
ADVSWA, ADVSWB	; ADVANCE A/C, B/D CH HEAD SWITCHING
CHIPID0, CHIPID1	; SYSTEM CONTROL INTERFACE CHIP ID
CHSL	; 1 - 4CH/5 - 8CH SELECT
CNFCKA, CNFCKB	; CONFIDENCE A/C, B/D CH CLOCK
CNFDA0 - CNFDA4, CNFDB0 - CNFDB4	; CONFIDENCE A/C, B/D CH DATA
CNFSWA, CNFSWB	; CONFIDENCE A/C, B/D CH HEAD SWITCHING
GCTL0 - GCTL5, GTEST, PULLTST	; TEST PIN
JUMP	; DT JUMP
MCK	; 13.5 MHz CLOCK
MS	; SHUTTLE INTERFACE CONTROL
PCK	; 13.5 MHz PROGRAM PLAY CLOCK
REC	; RECORD MODE
RECCKA, RECCKB	; RECORD A/C, B/D CH CLOCK
RECDA0 - RECDA4, RECDB0 - RECDB4	; RECORD A/C, B/D CH DATA
RECSWA, RECSWB	; RECORD A/C, B/D CH HEAD SWITCHING SIGNAL
REFV	; REFERENCE VD
REFVP	; PROGRAM PLAY REFERENCE VD
REV	; REVERSE MODE INPUT
RST1, RST2, RST3	; IC RESET 1.2.3
SCS	; SYSTEM CONTROL INTERFACE CHIP SELECT
STAT0, STAT1	; SYSTEM CONTROL INTERFACE STATES
STRB	; SYSTEM CONTROL INTERFACE STROBE
STTP, SYTEST, TGTP1 - TGTP3, XMM	; TEST PIN
WECN1, WECN2	; A/C, B/D CH FIELD MEMORY DATA ENABLE

OUTPUT

ACEF, BDEF	; A/C, B/D CH ERROR FLAG
ACSY, BDSY	; A/C, B/D CH SYNC
AUAXS	; AUDIO AUXILIARY DATA SYNC PULSE
AUCH	; AUDIO CHANNEL PULSE
AUST	; AUDIO FIELD START PULSE
AUSYNC	; AUDIO SYNC PULSE
DHBDSW	; TEST PIN
F0	; FIELD ID
F5	; 526/60 AUDIO 0 FIELD PULSE
FS5F0 - FS5F2	; AUDIO 5 FIELD SEQUENCE
FSPRTY	; AUDIO 5 FIELD SEQUENCE PARITY
JUMPO	; DT JUMP STATES
MA1AD0 - MA1AD16, MB1AD0 - MB1AD16	; A/C, B/D CH FIELD MEMORY 1 ADDRESS
MA2AD0 - MA2AD16, MB2AD0 - MB2AD16	; A/C, B/D CH FIELD MEMORY 2 ADDRESS
MAWE, MBWE	; A/C, B/D CH FIELD MEMORY WRITE ENABLE
MON	; TEST PIN
MWR1, MWR2	; A/C, B/D CH FIELD MEMORY WRITE/READ CONTROL
NOSIGO	; NO SIGNAL STATES
REVO	; REVERSE STATES
SEG0, SEG1	; SEGMENT NUMBER
SHTLO	; SHUTTLE STATES
TRREF	; TRACK SYNC PULSE
VADATA0 - VADATA8	; AUDIO DATA AND B/D CH VIDEO DATA
VAPRITY	; AUDIO VIDEO DATA PARITY
VBLK	; VIDEO ECC BLOCK PULSE
VDATA0 - VDATA8	; A/C CH VIDEO DATA
VPRITY	; VIDEO DATA PARITY
VSYNC	; VIDEO SYNC PULSE
VVST	; VIDEO FIELD START PULSE
WST1, WST2	; TEST PIN

INPUT/OUTPUT

DREFIO	; REFERENCE VD SYNCHRONOUS INTERFACE
MAXA, MAXB	; A/C, B/D CH SHUTTLE OLD FLAG INTERFACE
MEMA1D0 - MEMA1D7, MEMB1D0 - MEMB1D7	; A/C, B/D CH FIELD MEMORY 1 DATA
MEMA2D0 - MEMA2D7, MEMB2D0 - MEMB2D7	; A/C, B/D CH FIELD MEMORY 2 DATA
STLAD0 - STLAD8, STLBD0 - STLBD8	; A/C, B/D CH SHUTTLE DATA INTERFACE
SYSIO0 - SYSIO7	; SYSTEM CONTROL INTERFACE DATA
WRIO	; WRITE/READ CONTROL SYNCHRONOUS INTERFACE

CXD8929R (SONY)

C-MOS OUTER ERROR CORRECTION DECODER
—TOP VIEW—

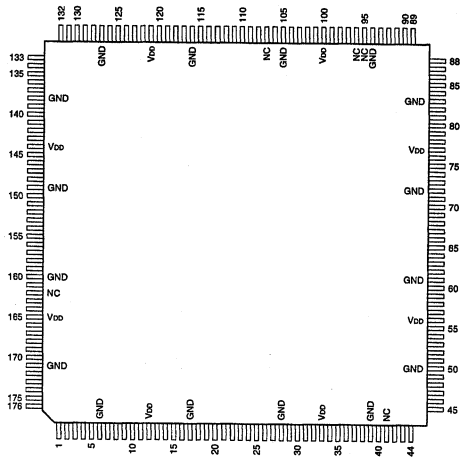

PIN No.	I/O	SIGNAL	PIN No.	I/O	SIGNAL	PIN No.	I/O	SIGNAL	PIN No.	I/O	SIGNAL
1	O	F5PSO	45	I	AVSTI	89	I/O	TDI4	133	I/O	VDMIOA8
2	O	TDO8	46	I	ASYNCI	90	I/O	TDI3	134	I/O	VDMIOA7
3	O	TDO7	47	I	AUCHI	91	I/O	TDI2	135	I/O	VDMIOA6
4	O	TDO6	48	I	AUXSYI	92	I/O	TDI1	136	I/O	VDMIOA5
5	O	TDO5	49	I	FS5FI	93	I/O	TDI0	137	I/O	VDMIOA4
6	—	GND	50	—	GND	94	—	GND	138	—	GND
7	O	TDO4	51	I	VAIN8	95	—	NC	139	I/O	VDMIOA3
8	O	TDO3	52	I	VAIN7	96	—	NC	140	I/O	VDMIOA2
9	O	TDO2	53	I	VAIN6	97	O	VEOUT	141	I/O	VDMIOA1
10	O	TDO1	54	I	VAIN5	98	O	VDOUT7	142	I/O	VDMIOA0
11	O	TDO0	55	I	VAIN4	99	O	VDOUT6	143	O	$\overline{VMDC}$
12	—	VDD	56	—	VDD	100	—	VDD	144	—	VDD
13	I	REV	57	I	VAIN3	101	O	VDOUT5	145	O	$\overline{VMWE}$
14	I	JUMP	58	I	VAIN2	102	O	VDOUT4	146	I/O	VDMIOB8
15	I	F5MDI	59	I	VAIN1	103	O	VDOUT3	147	I/O	VDMIOB7
16	O	DE2XJP	60	I	VAIN0	104	O	VDOUT2	148	I/O	VDMIOB6
17	—	GND	61	—	GND	105	—	GND	149	—	GND
18	I/O	SYSIO7	62	I	VIN8	106	O	VDOUT1	150	I/O	VDMIOB5
19	I/O	SYSIO6	63	I	VIN7	107	—	NC	151	I/O	VDMIOB4
20	I/O	SYSIO5	64	I	VIN6	108	O	VDOUT0	152	I/O	VDMIOB3
21	I/O	SYSIO4	65	I	VIN5	109	O	VSYNCO	153	I/O	VDMIOB2
22	I/O	SYSIO3	66	I	VIN4	110	O	VPRTO	154	I/O	VDMIOB1
23	I/O	SYSIO2	67	I	VIN3	111	O	VMADD16A	155	I/O	VDMIOB0
24	I/O	SYSIO1	68	I	VIN2	112	O	VMADD16B	156	O	MON
25	I/O	SYSIO0	69	I	VIN1	113	O	VMADD15	157	O	ADOUT1
26	O	$\overline{OBUSEN}$	70	I	VIN0	114	O	VMADD14	158	O	ADOUT2
27	I	IBUSEN	71	I	MCK	115	O	VMADD13	159	O	AVSTO
28	—	GND	72	—	GND	116	—	GND	160	—	GND
29	I	STAT1	73	I	MCKP	117	O	VMADD12	161	I	TEST
30	I	STAT0	74	I	VVSTI	118	O	VMADD11	162	—	NC
31	I	STRB	75	I	VSYNCI	119	O	VMADD10	163	I	FS
32	I	SCS	76	I	VBLKI	120	O	VMADD9	164	I	TAI9
33	—	VDD	77	—	VDD	121	—	VDD	165	—	VDD
34	I	CHIPID1	78	I	VPRTI	122	O	VMADD8	166	I	TAI8
35	I	CHIPID0	79	I	$\overline{SHUTTLE}$	123	O	VMADD7	167	I	TAI7
36	I	$\overline{CPTEST}$	80	I	$\overline{TRE}$	124	O	VMADD6	168	I	TAI6
37	I	$\overline{CPTSRB}$	81	I	$\overline{TWE}$	125	O	VMADD5	169	I	TAI5
38	I	NOSIG	82	I	$\overline{XMM}$	126	O	VMADD4	170	I	FS256
39	—	GND	83	—	GND	127	—	GND	171	—	GND
40	I	$\overline{RESET}$	84	I	$\overline{TDIEN}$	128	O	VMADD3	172	I	TAI4
41	—	NC	85	I/O	TDI8	129	O	VMADD2	173	I	TAI3
42	I	REFV	86	I/O	TDI7	130	O	VMADD1	174	I	TAI2
43	I	REFVP	87	I/O	TDI6	131	O	VMADD0	175	I	TAI1
44	I	APRTI	88	I/O	TDI5	132	O	VRE	176	I	TAI0

INPUT

APRTI	; AUDIO PARITY
ASYNCI	; AUDIO SYNC TIMMING
AUCHI	; AUDIO CHANNEL TIMMING
AUXSYI	; AUDIO AUX SYNC TIMMING
AVSTI	; AUDIO V SYNC TIMMING
CHIPID0, CHIPID1	; ID NUMBER
$\overline{CPTEST}$	; IC TEST MODE (NORMAL "1")
$\overline{CPTSRB}$	; TEST MODE SETTING TIMMING
F5MDI	; 5 FILD SEQUENCE TREATMENT MODE
FS256	; AUDIO SAMPLING FREQUENCY 256 CLOCK
FS5FI	; 5 FILD TIMMING
FS	; AUDIO SAMPLING FREQUENCY CLOCK
IBUSEN	; SYSIO0 - SYSIO7 TEMINAL I/O CONTROL
JUMP	; DT JUMP TIMMING (NORMAL "1")
MCK	; CLOCK
MCKP	; PROGRAM PLAY CLOCK
NOSIG	; NO SIGNAL
REFV	; VIDEO REFERENCE V SYNC SIGNAL
REFVP	; VIDEO REFERENCE V SYNC SIGNAL (PROGRAM PLAY)
$\overline{RESET}$	; RESET
REV	; REVERSE PLAYBACK MODE (NORMAL PLAY "1")
SCS	; SYSTEM CONTROL CLOCK SELECT
SHUTTLE	; OUTSIDE MEMORY WRITE ENABLE
STAT0, STAT1	; SYSIO0 - SYSIO7 SIGNAL DATA ATTRIBUTE DISTINCTION
STRB	; SYSTEM CONTROL CLOCK
TAI0 - TAI9	; TEST DATA
TDIEN	; OUTSIDE MEMORY ADDRESS LINE
TEST	; TEST
TRE	; INSIDE MEMORY READ ENABLE
TWE	; INSIDE MEMORY WRITE ENABLE
VAIN0 - VAIN8	; VIDEO B/D ch DATA + AUDIO DATA
VBLKI	; VIDEO BLOCK TIMMING
VIN0 - VIN8	; VIDEO A/C ch DATA
VPRTI	; VIDEO PARITY
VSYNCI	; VIDEO TIMMING
VVSTI	; VIDEO V SYNC TIMMING
XMM	; OUTSIDE MEMORY ADDRESS LINE

OUTPUT

ADOUT0, ADOUT1	; AUDIO DATA CH3/CH4, CH1/CH2
AVSTO	; AUDIO TIMMING SIGNAL
DE2XJP	; DISCONTINUITY OF FIELD
F5PSO	; 5 FILD TIMMING PULS
MON	; VIDEO OUTPUT TIMMING MONITOR
$\overline{OBUSEN}$	; SYSIO0 - SYSIO7 TERMINAL I/O CONTROL
TDO0 - TDO8	; TEST DATA
VDOUT0 - VDOUT7	; VIDEO DATA
VEOUT	; VIDEO ERROR FLAG
VMADD0 - VMADD15	; OUTSIDE MEMORY ADDRESS LINE
VMADD16A, 16B	; OUTSID MEMORY (A), (B) ADDRESS LINE
$\overline{VMDC}$	; OUTSIDE MEMORY CONTROL SIGNAL
$\overline{VMWE}$	; OUTSIDE MEMORY WRITE TIMMING
VPRITO	; VIDEO PARITY
VRE	; OUTSIDE MEMORY READ ENABLE
VSYNCO	; VIDEO SYNC TIMMING

INPUT/OUTPUT

SYSIO0 - SYSIO7	; SYSTEM CONTROL SIGNAL DATA
TDI0 - TDI8	; TEST DATA
VDMIOA0 - VDMIOA8	; OUTSIDE MEMORY (A) DATA
VDMIOB0 - VDMIOB8	; OUTSIDE MEMORY (B) DATA

CXD8933AR (SONY)

C-MOS IMAGE ENHANCER

—TOP VIEW—

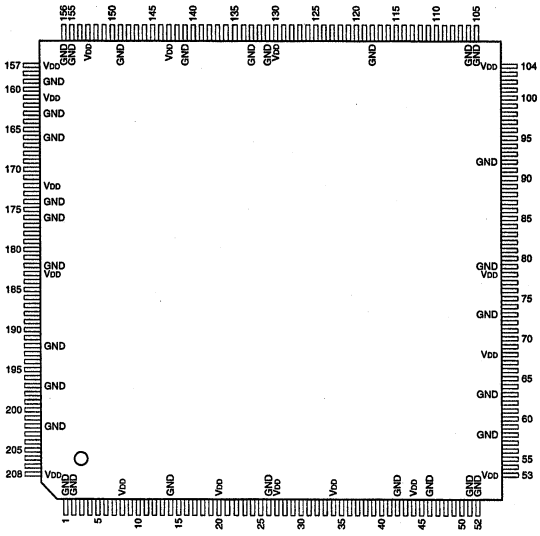

PIN NO.	I/O	SIGNAL	PIN NO.	I/O	SIGNAL	PIN NO.	I/O	SIGNAL	PIN NO.	I/O	SIGNAL
1	—	GND	53	—	VDD	105	—	GND	157	—	VDD
2	—	GND	54	O	DTL07	106	—	GND	158	O	SC
3	O	RO08	55	O	DTL06	107	I	BI11	159	—	GND
4	O	RO07	56	O	DTL05	108	I	GI00	160	I	EXTSC
5	O	RO06	57	O	DTL04	109	I	GI01	161	—	VDD
6	O	RO05	58	—	GND	110	I	GI02	162	I	EXTSYNC
7	O	RO04	59	O	DTL03	111	I	GI03	163	—	GND
8	—	VDD	60	O	DTL02	112	I	GI04	164	O	HCOM2
9	O	RO03	61	O	DTL01	113	I	GI05	165	O	HCOM1
10	O	RO02	62	O	DTL00	114	I	GI06	166	—	GND
11	O	RO01	63	—	GND	115	I	GI07	167	I	VRST
12	O	RO00	64	O	MPX13	116	I	GI08	168	O	CF
13	O	GO11	65	O	MPX12	117	I	GI09	169	O	TGC
14	—	GND	66	O	MPX11	118	—	GND	170	O	INTEXT
15	O	GO10	67	O	MPX10	119	I	GI10	171	O	CHARCLK
16	O	GO09	68	—	VDD	120	I	GI11	172	—	VDD
17	O	GO08	69	O	MPX09	121	I	RI00	173	I	TRST
18	O	GO07	70	O	MPX08	122	I	RI01	174	—	GND
19	O	GO06	71	O	MPX07	123	I	RI02	175	I	TCK
20	—	VDD	72	O	MPX06	124	I	RI03	176	—	GND
21	O	GO05	73	—	GND	125	I	RI04	177	I	TMS
22	O	GO04	74	O	MPX05	126	I	RI05	178	I	TDI
23	O	GO03	75	O	MPX04	127	I	RI06	179	O	TDO
24	O	GO02	76	O	MPX03	128	I	RI07	180	I	HDI
25	O	GO01	77	O	MPX02	129	I	RI08	181	I	VDI
26	—	GND	78	—	VDD	130	—	VDD	182	—	GND
27	—	VDD	79	—	GND	131	—	GND	183	—	VDD
28	O	GO00	80	O	MPX01	132	O	CLK18	184	I	RTEB
29	O	BO11	81	O	MPX00	133	—	GND	185	I	RTIN
30	O	BO10	82	I	STD23	134	I	RI09	186	O	SDAO
31	O	BO09	83	I	STD22	135	I	RI10	187	I	SDAI
32	O	BO08	84	I	STD21	136	I	RI11	188	I	SCL
33	O	BO07	85	I	STD20	137	O	OHBFLD	189	I	SLAO
34	—	VDD	86	I	STD13	138	O	OHBVD	190	I	SLAI
35	O	BO06	87	I	STD12	139	O	OHBHD	191	I	TEST
36	O	BO05	88	I	STD11	140	O	ASSV	192	—	GND
37	O	BO04	89	I	STD10	141	—	GND	193	O	VFD0
38	O	BO03	90	O	VDO	142	O	ACSH	194	O	VFD1
39	O	BO02	91	O	HDO	143	—	VDD	195	O	VFD2
40	O	BO01	92	—	GND	144	O	QBAR	196	O	VFD3
41	O	BO00	93	I	BI00	145	O	IBAR	197	—	GND
42	—	GND	94	I	BI01	146	O	CLAMP	198	O	VFD4
43	I	CLK	95	I	BI02	147	O	SAMPLE	199	O	VFD5
44	—	VDD	96	I	BI03	148	O	SYSYBLK	200	O	VFD6
45	I	PRST	97	I	BI04	149	—	GND	201	O	VFD7
46	—	GND	98	I	BI05	150	O	SYNC	202	—	GND
47	O	DTL11	99	I	RI06	151	O	BF	203	O	VFD8
48	O	DTL10	100	I	BI07	152	O	LALT	204	O	VFD9
49	O	DTL09	101	I	BI08	153	—	VDD	205	O	RO11
50	O	DTL08	102	I	BI09	154	I	FSC4	206	O	RO10
51	—	GND	103	I	BI10	155	—	GND	207	O	RO09
52	—	GND	104	—	VDD	156	—	GND	208	—	VDD

INPUT

BI00 - BI11	: B CHANNEL VIDEO DATA
CLK	: CLOCK
EXTSC	: EXTERNAL SUBCARRIER
EXTSYNC	: EXTERNAL SYNC
FSC4	: 4 fsc
GI00 - GI11	: G CHANNEL VIDEO DATA
HDI	: HORIZONTAL DRIVE
PRST	: POWER ON RESET
RI00 - RI11	: R CHANNEL VIDEO DATA
RTEB	: RAM TEST ENABLE
RTIN	: RAM TEST DATA
SCL	: IIC CLOCK
SDAI	: IIC DATA
SLAI	: SUB ADDRESS 2nd LSB
SLAO	: SUB ADDRESS LSB
STD10 - STD23	: SKIN TONE AREA
TCK	: BOUNDARY SCAN CLOCK
TDI	: BOUNDARY SCAN DATA
TEST	: TEST ENABLE
TMS	: BOUNDARY SCAN MODE
TRST	: BOUNDARY SCAN RESET
VDI	: VERTICAL DRIVE
VRST	: VERTICAL RESET

OUTPUT

ACSH	: ASPECT RATIO CONVERSION CLOCK/HD
ASSV	: ASPECT RATIO CONVERSION SELECT PULSE/VD
BF	: BURST FLAG
BO00 - BO11	: B CHANNEL VIDEO DATA
CF	: COLOR FRAMING
CHARCLK	: CHARACTER GENERATOR CLOCK
CLAMP	: CLAMP PULSE
CLK18	: 18 MHz CLOCK
DTL00 - DTL11	: DETAIL SIGNAL
GO00 - GO11	: G CHANNEL VIDEO DATA
HCOMP1, HCOMP2	: HORIZONTAL SYNC PHASE COMPARATOR
HDO	: HORIZONTAL RESET
IBAR	: SMPTE I BAR FLAG
INTEXT	: SYNC GENERATOR INTERNAL/EXTERNAL
LALT	: LINE ALTERNATE
MPX00-MPX13	: DETECT DATA
OHBFLD	: FIELD
OHBHD	: HORIZONTAL RESET
OHBVD	: VERTICAL RESET
QBAR	: SMPTE Q BAR FLAG
RO00 - RO11	: R CHANNEL VIDEO DATA
SAMPLE	: SAMPLE PULSE
SC	: SUBCARRIER
SDAO	: SERIAL DATA
SYNCE	: SYNC PULSE
SYSYBLK	: SYSTEM BLANKING PULSE
TDO	: BOUNDARY SCAN DATA
TGC	: BURST GATE PULSE
VDO	: VERTICAL RESET
VFD0 - VFD9	: VF DETAIL SIGNAL

CXD8934AR (SONY)

C-MOS PROCESSER

—TOP VIEW—

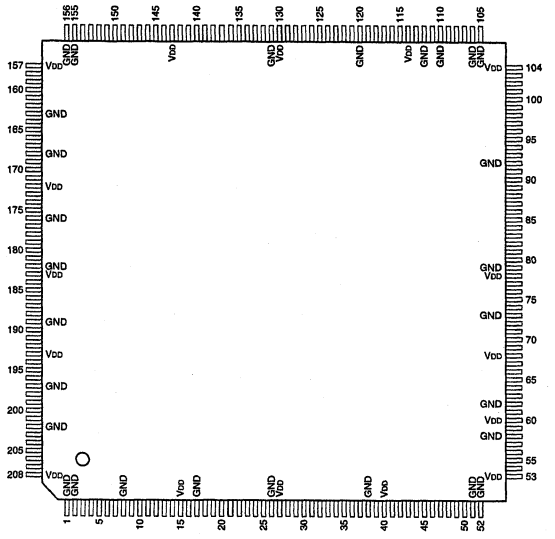

PIN NO.	I/O	SIGNAL	PIN NO.	I/O	SIGNAL	PIN NO.	I/O	SIGNAL	PIN NO.	I/O	SIGNAL
1	—	GND	53	—	VDD	105	—	GND	157	—	VDD
2	—	GND	54	I	$\overline{TE}$	106	—	GND	158	O	GPO00
3	O	BPO08	55	I	SCLM	107	I	DTL09	159	O	GPO01
4	O	BPO09	56	I	SDAMI	108	I	DTL10	160	O	GPO02
5	O	ZO	57	O	SDAMO	109	I	DTL11	161	O	GPO03
6	O	MK1O	58	—	GND	110	—	GND	162	O	GPO04
7	O	MK2O	59	I	TRST	111	I	CLK	163	—	GND
8	—	GND	60	—	VDD	112	—	$\overline{GND}$	164	O	GPO05
9	I	SYNCI	61	I	TCK	113	I	$\overline{POR}$	165	O	GPO06
10	I	TLI	62	—	GND	114	—	VDD	166	O	GPO07
11	I	TLBI	63	I	TMS	115	I	BPI00	167	O	GPO08
12	O	VDO	64	I	TDI	116	I	BPI01	168	—	GND
13	O	HDO	65	O	TDO	117	I	BPI02	169	O	GPO09
14	O	SKD	66	I	HDI	118	I	BPI03	170	O	YPO00
15	—	VDD	67	I	VDI	119	I	BPI04	171	O	YPO01
16	O	CK18	68	—	VDD	120	—	GND	172	—	VDD
17	—	GND	69	O	DET10	121	I	BPI05	173	O	YPO02
18	I	PDA8	70	O	DET11	122	I	BPI06	174	O	YPO03
19	I	PDA7	71	O	DET12	123	I	BPI07	175	O	YPO04
20	I	PDA6	72	O	DET13	124	I	BPI08	176	—	GND
21	I	PDA5	73	—	GND	125	I	BPI09	177	O	YPO05
22	I	PDA4	74	O	DET20	126	I	BPI10	178	O	YPO06
23	I	PDA3	75	O	DET21	127	I	BPI11	179	O	YPO07
24	I	PDA2	76	O	DET22	128	I	GPI00	180	O	YPO08
25	I	PDA1	77	O	DET23	129	I	GPI01	181	O	YPO09
26	—	GND	78	—	VDD	130	—	VDD	182	—	GND
27	—	VDD	79	—	GND	131	—	GND	183	—	VDD
28	I	PDA0	80	I	MPXI00	132	I	GPI02	184	O	YPO10
29	I/O	PDI7	81	I	MPXI01	133	I	GPI03	185	O	YPO11
30	I/O	PDI6	82	I	MPXI02	134	I	GPI04	186	O	RPO00
31	I/O	PDI5	83	I	MPXI03	135	I	GPI05	187	O	RPO01
32	I/O	PDI4	84	I	MPXI04	136	I	GPI06	188	O	RPO02
33	I/O	PDI3	85	I	MPXI05	137	I	GPI07	189	—	GND
34	I/O	PDI2	86	I	MPXI06	138	I	GPI08	190	O	RPO03
35	I/O	PDI1	87	I	MPXI07	139	I	GPI09	191	O	RPO04
36	I/O	PDI0	88	I	MPXI08	140	I	GPI10	192	O	RPO05
37	I	PORS	89	I	MPXI09	141	I	GPI11	193	—	VDD
38	—	GND	90	I	MPXI10	142	I	RPI00	194	O	RPO06
39	I	$\overline{WE}$	91	I	MPXI11	143	—	VDD	195	O	RPO07
40	—	VDD	92	—	GND	144	I	RPI01	196	O	RPO08
41	I	$\overline{CE}$	93	I	MPXI12	145	I	RPI02	197	—	GND
42	I	$\overline{RE}$	94	I	MPXI13	146	I	RPI03	198	O	RPO09
43	I	SCLI	95	I	DTL00	147	I	RPI04	199	O	BPO00
44	I	SDAII	96	I	DTL01	148	I	RPI05	200	O	BPO01
45	O	SDAIO	97	I	DTL02	149	I	RPI06	201	O	BPO02
46	I	IRC	98	I	DTL03	150	I	RPI07	202	—	GND
47	I	SLAI	99	I	DTL04	151	I	RPI08	203	O	BPO03
48	I	SLAM	100	I	DTL05	152	I	RPI09	204	O	BPO04
49	I	TEN	101	I	DTL06	153	I	RPI10	205	O	BPO05
50	I	TIN	102	I	DTL07	154	I	RPI11	206	O	BPO06
51	—	GND	103	I	DTL08	155	—	GND	207	O	BPO07
52	—	GND	104	—	VDD	156	—	GND	208	—	VDD

INPUT

BPI00 - BPI11	: B CHANNEL SIGNAL
$\overline{CE}$	: L: PARALLEL I/O CHIP ENABLE
CLK	: MASTER CLOCK
DTL00 - DTL11	: DETAIL
GPI00 - GPI11	: G CHANNEL SIGNAL
HDI	: HORIZONTAL DRIVE
IRC	: IRIS CPU PRESENCE
MPXI00 - MPXI13	: DETECTION MULTIPLEX
PDA0 - PDA8	: PARALLEL DATA ADDRESS
$\overline{POR}$	: L: POWER ON RESET
PORS	: PARALLEL I/O ; SERIAL I/O SELECT
RPI00 - RPI11	: R CHANNEL SIGNAL
$\overline{RE}$	: L: PARALLEL I/O READ ENABLE
SCLI	: SERIAL I/O IRIS CLOCK
SCLM	: SERIAL I/O MAIN CLOCK
SDAII	: SERIAL I/O IRIS DATA
SDAMI	: SERIAL I/O MAIN DATA
SLAI	: IRIS SERIAL I/O LOCAL ADDRESS
SLAM	: MAIN SERIAL I/O LOCAL ADDRESS
SYNCI	: SYNC
TCK	: BOUNDARY SCAN CLOCK
TDI	: BOUNDARY SCAN TEST DATA
$\overline{TE}$	: L: RAM TEST ENABLE
TEN	: TEST ENABLE
TIN	: RAM TEST
TLBI	: TITLE BACK
TLI	: TITLE
TMS	: BOUNDARY SCAN MODE
TRST	: BOUNDARY SCAN RESET
VDI	: VERTICAL DRIVE
$\overline{WE}$	: L: PARALLEL I/O WRITE ENABLE

OUTPUT

BPO00 - BPO09	: B SIGNAL
CK18	: DIVIDED-BY-TWO CLOCK
DET10 - DET23	: COLOR DETECTION SIGNAL
GPO00 - GPO09	: G SIGNAL
HDO	: HORIZONTAL DRIVE
MK1O, MK2O	: MARKER1, 2
RPO00 - RPO09	: R SIGNAL
SDAIO	: SERIAL I/O IRIS DATA
SDAMO	: SERIAL I/O MAIN DATA
SKD	: DOMAIN OF COLOR DETECTION
TDO	: BOUNDARY SCAN TEST DATA
VDO	: VERTICAL DRIVE
YPO00 - YPO11	: Y SIGNAL
ZO	: ZEBRA SIGNAL

INPUT/OUTPUT

PDI0 - PDI7	: PARALLEL I/O DATA

CXD8953Q (SONY)

C-MOS ERROR DETECTION AND HANDLING

—TOP VIEW—

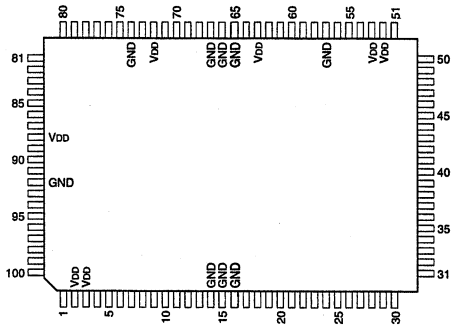

PIN No.	I/O	SIGNAL	PIN No.	I/O	SIGNAL	PIN No.	I/O	SIGNAL	PIN No.	I/O	SIGNAL	PIN No.	I/O	SIGNAL
1	O	TEST0	21	I	IDATA8	41	I	TEST6	61	O	ODATA8	81	O	APERR
2	—	VDD	22	I	IDATA9	42	I	A3	62	O	ODATA7	82	O	FFERR
3	—	VDD	23	I	FORM0	43	I	A2	63	—	VDD	83	O	ANCER
4	O	TEST1	24	I	FORM1	44	I	A1	64	O	ODATA6	84	I/O	ANCEDH
5	O	TEST2	25	I	AUTO	45	I	A0	65	—	GND	85	I/O	ANCEDA
6	I	TEST3	26	I	MODE0	46	I	$\overline{\text{WRITE}}$	66	—	GND	86	I/O	ANCIDH
7	I	TEST4	27	I	MODE1	47	I	$\overline{\text{READ}}$	67	—	GND	87	I/O	ANCIDA
8	O	TEST5	28	I	MODE2	48	I	$\overline{\text{CS}}$	68	O	ODATA5	88	—	VDD
9	I	ICLOCK	29	O	OTHANC	49	O	TEST7	69	O	ODATA4	89	I/O	ANCUES
10	I	IDATA0	30	O	EDHVLD	50	I	TEST8	70	O	ODATA3	90	I/O	APEDH
11	I	IDATA1	31	O	DPR	51	I	$\overline{\text{RESET}}$	71	O	ODATA2	91	I/O	APEDA
12	I	IDATA2	32	O	INTR	52	—	VDD	72	—	VDD	92	—	GND
13	I	IDATA3	33	I/O	D7	53	—	VDD	73	O	ODATA1	93	I/O	APIDH
14	—	GND	34	I/O	D6	54	O	TEST9	74	—	GND	94	I/O	APIDA
15	—	GND	35	I/O	D5	55	O	TEST10	75	O	ODATA0	95	I/O	APUES
16	—	GND	36	I/O	D4	56	O	TEST11	76	O	TEST13	96	I/O	FFEDH
17	I	IDATA4	37	I/O	D3	57	—	GND	77	O	OD1	97	I/O	FFEDA
18	I	IDATA5	38	I/O	D2	58	O	TEST12	78	O	OL525	98	I/O	FFIDH
19	I	IDATA6	39	I/O	D1	59	O	OCLOCK	79	I	TEST14	99	I/O	FFIDA
20	I	IDATA7	40	I/O	D0	60	O	ODATA9	80	I	TEST15	100	I/O	FFUES

INPUT

A0 - A3	: ADDRESS
AUTO	: AUTO DETECT
$\overline{\text{CS}}$	: CHIP SELECT
FORM0, FORM1	: VIDEO FORMAT
ICLOCK	: CLOCK
IDATA0 - IDATA9	: VIDEO DATA
MODE0	: 1 = Detect each FLAG and calculate CRC. Add the result and output. 0 = Input each FLAG from outside and calculate CRC. Add the result and output.
MODE1	: 1 = If other ANCILLARY DATA existe EDH, such as AUDIO, no EDH is added. 0 = EDH is added unconditionally.
MODE2	: MODE SELECT
$\overline{\text{READ}}$	: READ
$\overline{\text{RESET}}$	: RESET
TEST3, TEST4, TEST6, TEST8, TEST14, TEST15	: TEST
$\overline{\text{WRITE}}$	: WRITE

OUTPUT

ANCER	: ANCILLARY DATA ERROR
APERR	: ACTIVE PICTURE ERROR
DPR	: INPUT SIGNAL DETECT
EDHVLB	: ERROR DETECTION & HANDLING CORRESPOND DETECT
FFERR	: FULL FIELD ERROR
INTR	: INTERRUPT
OCLOCK	: OUTPUT CLOCK
OD1	: D1/D2 FORMAT SELECT
ODATA0 - ODATA9	: OUTPUT DATA
OL525	: 525/625, 422/4FC FORMAT SELECT
OTHANC	: OTHER ANC DATA DETECT
TEST0 - TEST2, TEST5, TEST7, TEST9 - TEST13	: TEST

INPUT/OUTPUT

ANCEDA	: ANCILLARY EDA FLAG
ANCEDH	: ANCILLARY EDH FLAG
ANCIDA	: ANCILLARY IDA FLAG
ANCIDH	: ANCILLARY IDH FLAG
ANCUES	: ANCILLARY UES FLAG
APEDA	: ACTIVE PICTURE EDA FLAG
APEDH	: ACTIVE PICTURE EDH FLAG
APIDA	: ACTIVE PICTURE IDA FLAG
APIDH	: ACTIVE PICTURE IDH FLAG
APUES	: ACTIVE PICTURE UES FLAG
D0 - D7	: CPU DATA
FFEDA	: FULL FIELD EDA FLAG
FFEDH	: FULL FIELD EDH FLAG
FFIDA	: FULL FIELD IDA FLAG
FFIDH	: FULL FIELD IDH FLAG
FFUES	: FULL FIELD UES FLAG

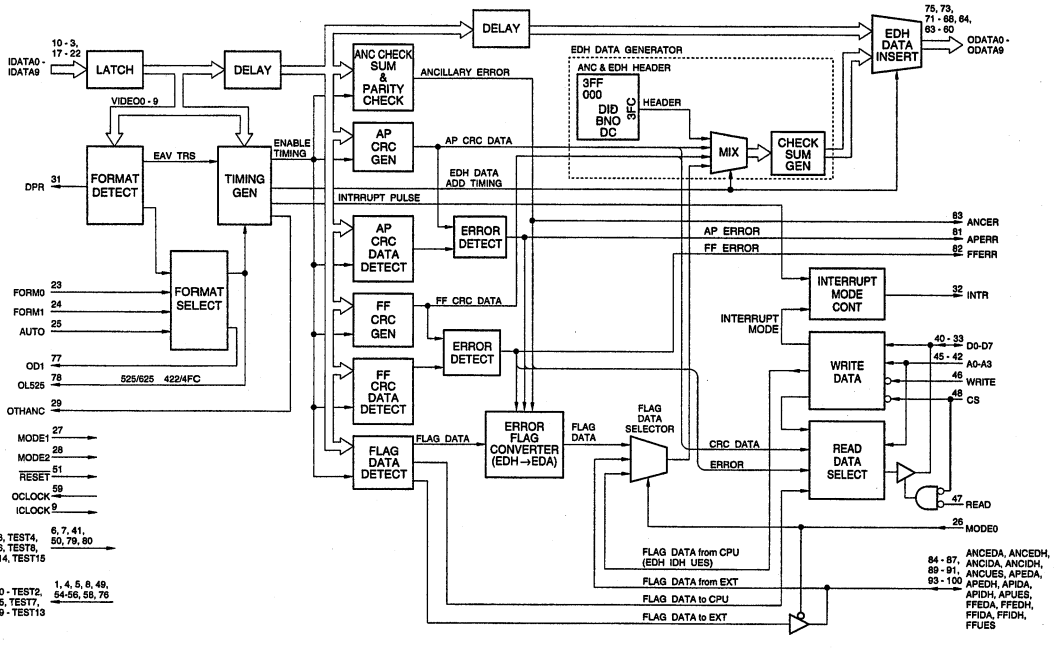

CXK1203AR (SONY)
CXK1203AR-T4

C-MOS DIGITAL LINE MEMORY
—TOP VIEW—

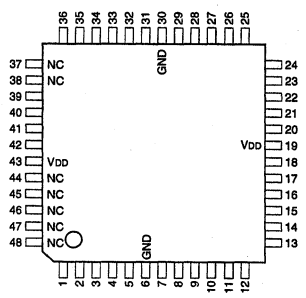

PIN NO.	I/O	SIGNAL	PIN NO.	I/O	SIGNAL	PIN NO.	I/O	SIGNAL	PIN NO.	I/O	SIGNAL
1	I	D0	13	I	PSW7	25	I	$\overline{OEN}$	37	—	NC
2	I	D1	14	I	PSW6	26	O	DOT9	38	—	NC
3	I	D2	15	I	PSW5	27	O	DOT8	39	I	AEN
4	I	D3	16	I	PSW4	28	O	DOT7	40	I	N/P
5	I	D4	17	I	PSW3	29	O	DOT6	41	I	SCLK
6	—	GND	18	I	PSW2	30	—	GND	42	I	CLK
7	I	D5	19	—	VDD	31	O	DOT5	43	—	VDD
8	I	D6	20	I	PSW1	32	O	DOT4	44	—	NC
9	I	D7	21	I	PSW0	33	O	DOT3	45	—	NC
10	I	D8	22	I	PSB2	34	O	DOT2	46	—	NC
11	I	D9	23	I	PSB1	35	O	DOT1	47	—	NC
12	I	TINT	24	I	PSB0	36	O	DOT0	48	—	NC

AEN : LINE MEMORY SELECT
CLK : CLOCK
DIN0 - DIN9 : VIDEO DATA INPUT
DOT0 - DOT9 : VIDEO DATA OUTPUT
N/P : NTSC/PAL/SECAM SELECT
OEN : OUTPUT ENABLE
PSB0 - PSB2 : DELAY STEP SELECT (1-BITxN)
PSW0 - PSW7 : DELAY STEP SELECT (8-BITxN)
SCLK : CLOCK EDGE SELECT
TINT : TEST

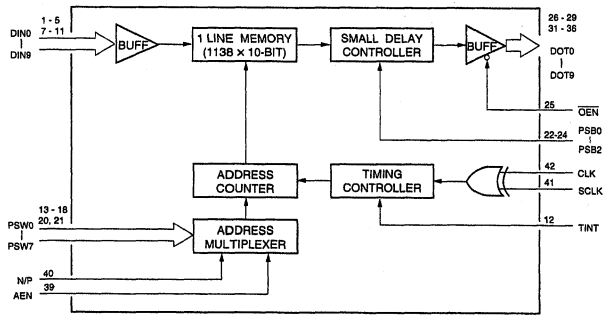

CXK48324R (SONY)
CXK48324R-1

C-MOS 2.4 M (960 × 306 × 8) BITS 3 PORTS VIDEO FIELD MEMORY
—TOP VIEW—

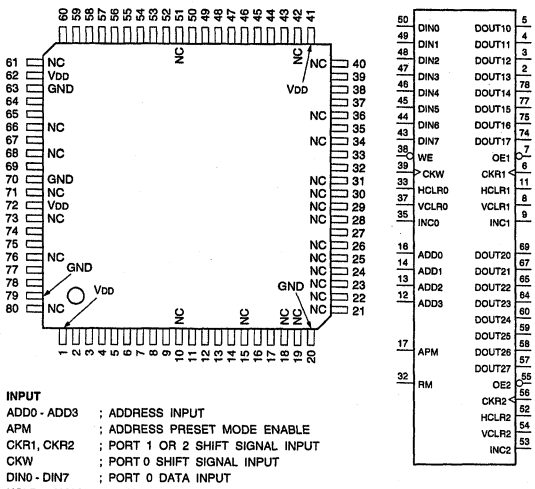

INPUT

ADD0 - ADD3 ; ADDRESS INPUT
APM ; ADDRESS PRESET MODE ENABLE
CKR1, CKR2 ; PORT 1 OR 2 SHIFT SIGNAL INPUT
CKW ; PORT 0 SHIFT SIGNAL INPUT
DIN0 - DIN7 ; PORT 0 DATA INPUT
HCLR0 - HCLR2 ; PORT 0 - 2 HORIZONTAL CLEAR
INC0 - INC2 ; PORT 0 - 2 LINE INCREMENT
RM ; RECURSIVE MODE ENABLE
TE ; TEST MODE ENABLE
VCLR0 - VCLR2 ; PORT 0 - 2 VERTICAL CLEAR
$\overline{OE1}$, $\overline{OE2}$; PORT 1 OR 2 OUTPUT ENABLE
$\overline{WE}$; PORT 0 WRITE ENABLE

OUTPUT

DO10 - DO17 ; PORT 1 DATA OUTPUT
DO20 - DO27 ; PORT 2 DATA OUTPUT

PIN NO.	I/O	SIGNAL	PIN NO.	I/O	SIGNAL	PIN NO.	I/O	SIGNAL	PIN NO.	I/O	SIGNAL
1	—	VDD	21	—	NC	41	—	VDD	61	—	NC
2	O	DO13	22	—	NC	42	—	NC	62	—	VDD
3	O	DO12	23	—	NC	43	I	DIN7	63	—	GND
4	O	DO11	24	—	NC	44	I	DIN6	64	O	DO23
5	O	DO10	25	—	NC	45	I	DIN5	65	O	DO22
6	I	CKR1	26	—	NC	46	I	DIN4	66	—	NC
7	I	$\overline{OE1}$	27	—	TE	47	I	DIN3	67	O	DO21
8	I	VCLR1	28	—	NC	48	I	DIN2	68	—	NC
9	I	INC1	29	—	NC	49	I	DIN1	69	O	DO20
10	—	NC	30	—	NC	50	I	DIN0	70	—	GND
11	I	HCLR1	31	—	NC	51	—	NC	71	—	NC
12	I	ADD3	32	I	RM	52	I	HCLR2	72	—	VDD
13	I	ADD2	33	I	HCLR0	53	I	INC2	73	—	NC
14	I	ADD1	34	—	NC	54	I	VCLR2	74	O	DO17
15	—	NC	35	I	INC0	55	I	$\overline{OE2}$	75	O	DO16
16	I	ADD0	36	—	NC	56	I	CKR2	76	—	NC
17	I	APM	37	I	VCLR0	57	O	DO27	77	O	DO15
18	—	NC	38	I	$\overline{WE}$	58	O	DO26	78	O	DO14
19	—	NC	39	I	CKW	59	O	DO25	79	—	GND
20	—	GND	40	—	NC	60	O	DO24	80	—	NC

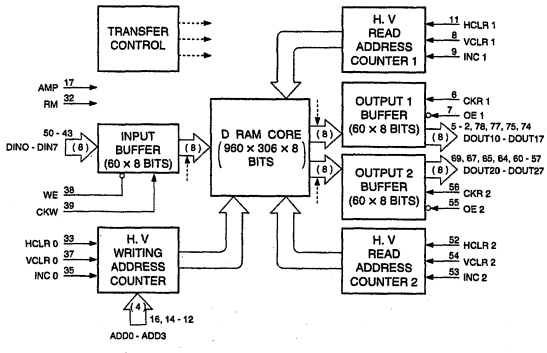

DS1302Z-TE2 (DALLAS)

REAL TIME CLOCK
—TOP VIEW—

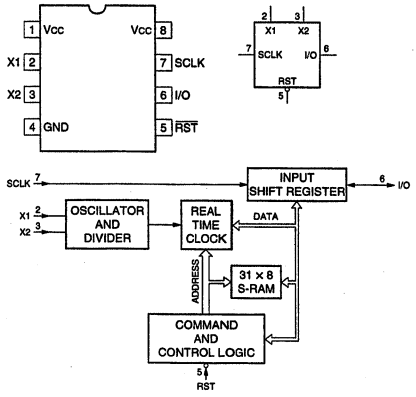

EL4581CS-TE2 (ELANTEC)

VIDEO SYNC SEPARATOR
—TOP VIEW—

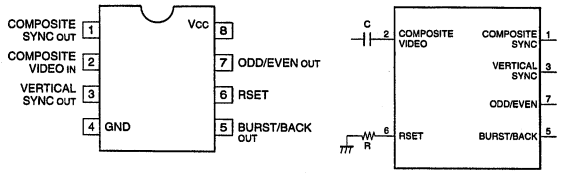

TIMING CHART

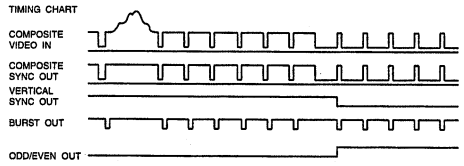

HD151015T (HITACHI)
HD151015TEL

C-MOS 9-BIT LEVEL SHIFTER/TRANSCEIVER WITH 3-STATE OUTPUTS
—TOP VIEW—

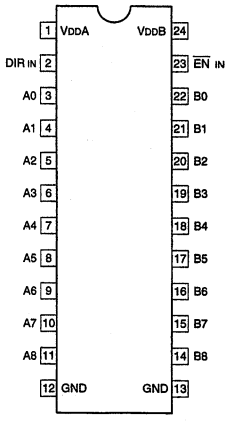

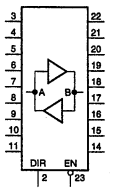

EN	DIR	OPERATION
0	0	B to A
0	1	A to B
1	×	HI-Z

0 : LOW LEVEL
1 : HIGH LEVEL
× : DON'T CARE
HI-Z : HIGH IMPEDANCE

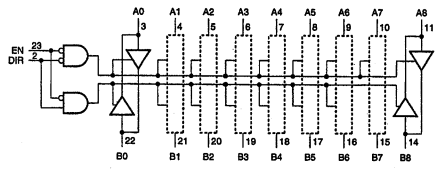

HM62W9127HJP-35 (HITACHI)
HM62W9127HJP-35Z

C-MOS 1M (128K × 9)-BIT SRAM
—TOP VIEW—

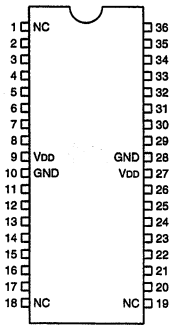

PIN No.	I/O	SIGNAL	PIN No.	I/O	SIGNAL
1	—	NC	19	—	NC
2	I	A3	20	I	A12
3	I	A2	21	I	A11
4	I	A1	22	I	A10
5	I	A0	23	I	A9
6	I	$\overline{CS}$	24	I	A8
7	I/O	I/O1	25	I/O	I/O5
8	I/O	I/O2	26	I/O	I/O6
9	—	VDD	27	—	VDD
10	—	GND	28	—	GND
11	I/O	I/O3	29	I/O	I/O7
12	I/O	I/O4	30	I/O	I/O8
13	I	$\overline{WE}$	31	I/O	I/O9
14	I	A16	32	I	$\overline{OE}$
15	I	A15	33	I	A7
16	I	A14	34	I	A6
17	I	A13	35	I	A5
18	—	NC	36	I	A4

INPUT
A0 - A16 ; ADDRESS INPUTS
$\overline{CS}$; CHIP SELECT
$\overline{OE}$; OUTPUT ENABLE INPUT
$\overline{WE}$; WRITE ENABLE INPUT

INPUT/OUTPUT
I/O1 - I/O9 ; DATA INPUTS/OUTPUTS

$\overline{CS}$	$\overline{OE}$	$\overline{WE}$	MODE	I/O
1	×	×	NON SELECT	HI-Z
0	1	1	OUTPUT DISABLE	HI-Z
0	0	1	READ	OUTPUT
0	×	0	WRITE	INPUT

0 ; LOW LEVEL
1 ; HIGH LEVEL
× ; DON'T CARE
HI-Z ; HIGH IMPEDANCE

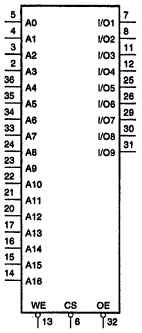

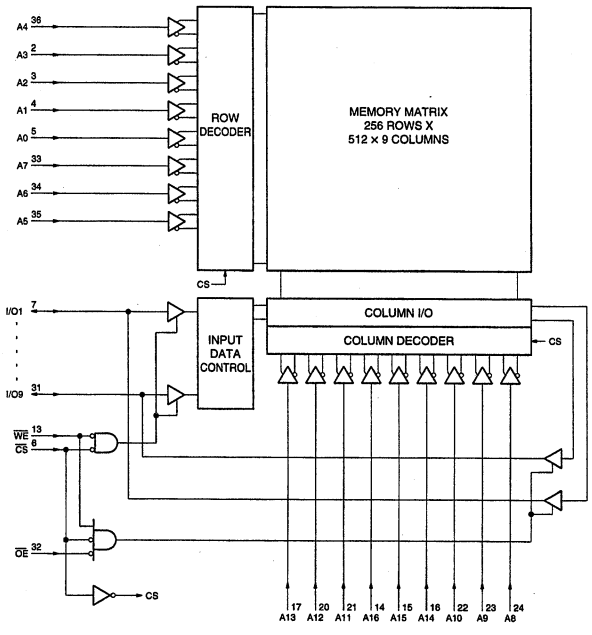

HD6433308RC69F (HITACHI)
HD6473308RF10

8-BIT SINGLE CHIP MICROCOMPUTER
—TOP VIEW—

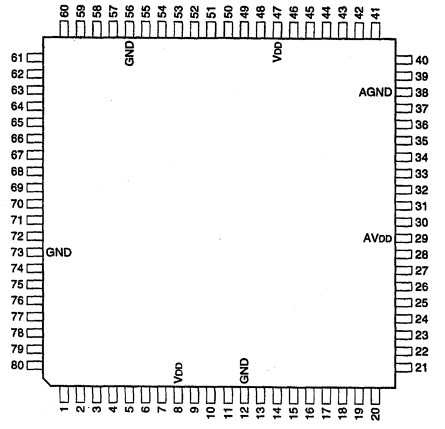

PIN NO.	I/O	SIGNAL	PIN NO.	I/O	SIGNAL	PIN NO.	I/O	SIGNAL	PIN NO.	I/O	SIGNAL
1	I	$\overline{RES}$	21	I/O	P60/FTCI	41	I/O	P42/TMRI0	61	I/O	P13/A3
2	I	XTAL	22	I/O	P61/FTOA	42	I/O	P43/TMCI1	62	I/O	P12/A2
3	I	EXTAL	23	I/O	P62/FTIA	43	I/O	P44/TMO1	63	I/O	P11/A1
4	I	MD1	24	I/O	P63/FTIB	44	I/O	P45/TMRI1	64	I/O	P10/A0
5	I	MD0	25	I/O	P64/FTIC	45	I/O	P46/PW0	65	I/O	P30/DDB0/D0
6	I	$\overline{NMI}$	26	I/O	P65/FTID	46	I/O	P47/PW1	66	I/O	P31/DDB1/D1
7	I	$\overline{STBY}$	27	I/O	P66/FTOB/IRQ6	47	—	VDD	67	I/O	P32/DDB2/D2
8	—	VDD	28	I/O	P67/$\overline{IRQ7}$	48	I/O	P27/A15	68	I/O	P33/DDB3/D3
9	I/O	P52/ASCK	29	—	AVDD	49	I/O	P26/A14	69	I/O	P34/DDB4/D4
10	I/O	P51/ARXD	30	I	P70/AN0	50	I/O	P25/A13	70	I/O	P35/DDB5/D5
11	I/O	P50/ATXD	31	I	P71/AN1	51	I/O	P24/A12	71	I/O	P36/DDB6/D6
12	—	GND	32	I	P72/AN2	52	I/O	P23/A11	72	I/O	P37/DDB7/D7
13	I/O	P97/$\overline{WE}$/WAIT	33	I	P73/AN3	53	I/O	P22/A10	73	—	GND
14	I/O	P96/Ø	34	I	P74/AN4	54	I/O	P21/A9	74	I/O	P80/RS0/E
15	I/O	P95/$\overline{RDY}$/$\overline{AS}$	35	I	P75/AN5	55	I/O	P20/A8	75	I/O	P81/RS1/$\overline{IOS}$
16	I/O	P94/$\overline{OE}$/$\overline{WR}$	36	I	P76/AN6	56	—	GND	76	I/O	P82/RS2
17	I/O	P93/$\overline{CS}$/$\overline{RD}$	37	I	P77/AN7	57	I/O	P17/A7	77	I/O	P83/RS3
18	I/O	P92/$\overline{IRQ0}$	38	—	AGND	58	I/O	P16/A6	78	I/O	P84/CTXD/$\overline{IRQ3}$
19	I/O	P91/$\overline{IRQ1}$	39	I/O	P40/TMCI0	59	I/O	P15/A5	79	I/O	P85/CRXD/$\overline{IRQ4}$
20	I/O	P90/ADTRG/$\overline{IRQ2}$	40	I/O	P41/TMO0	60	I/O	P14/A4	80	I/O	P86/CSCK/$\overline{IRQ5}$

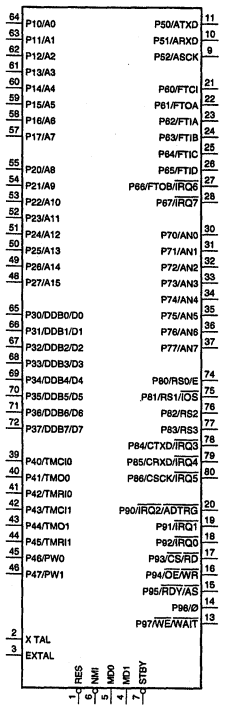

INPUT

A15 - A0	; ADDRESS BUS
ADTRG	; A/D CONVERSION EXIT TRIGGER
AN7 - AN0	; ANALOG
ARXD, CRXD	; RECEIVE DATA
CS	; CHIP SELECT
FTCI	; FREE RUNNING TIMER CLOCK
IRQ0 - IRQ7	; INTERRUPT REQUEST
MD0, MD1	; MODE
NMI	; INTERRUPT FOR NO MASKING
OE	; OUTPUT ENABLE
P77 - P70	; PORT 7
RES	; RESET
RS3 - RS0	; REGISTER SELECT
STBY	; STANDBY
TMCI0, TMCI1	; 8-BIT TIMER CLOCK
TMRI0, TMRI1	; 8-BIT TIMER COUNTER RESET
XTAL, EXTAL	; CRYSTAL
WAIT	; WAIT
WE	; WRITE ENABLE

OUTPUT

ATXD, CTXD	; TRANSMIT DATA
AS	; ADDRESS STROBE
E	; ENABLE CLOCK
FTOA, FTOB	; FREE RUNNING TIMER COMPARE
IOS	; I/O SELECT
PW0, PW1	; PWM TIMER
RD	; READ
RDY	; READY
TMO0, TMO1	; 8-BIT TIMER
WR	; WRITE
Ø	; SYSTEM CLOCK

INPUT/OUTPUT

ASCK, CSCK	; SERIAL CLOCK
D7 - D0	; DATA BUS
DDB7 - DDB0	; DPRAM DATA BUS
P17 - P10	; PORT 1
P27 - P20	; PORT 2
P37 - P30	; PORT 3
P47 - P40	; PORT 4
P52 - P50	; PORT 5
P67 - P60	; PORT 6
P86 - P80	; PORT 8
P97 - P90	; PORT 9

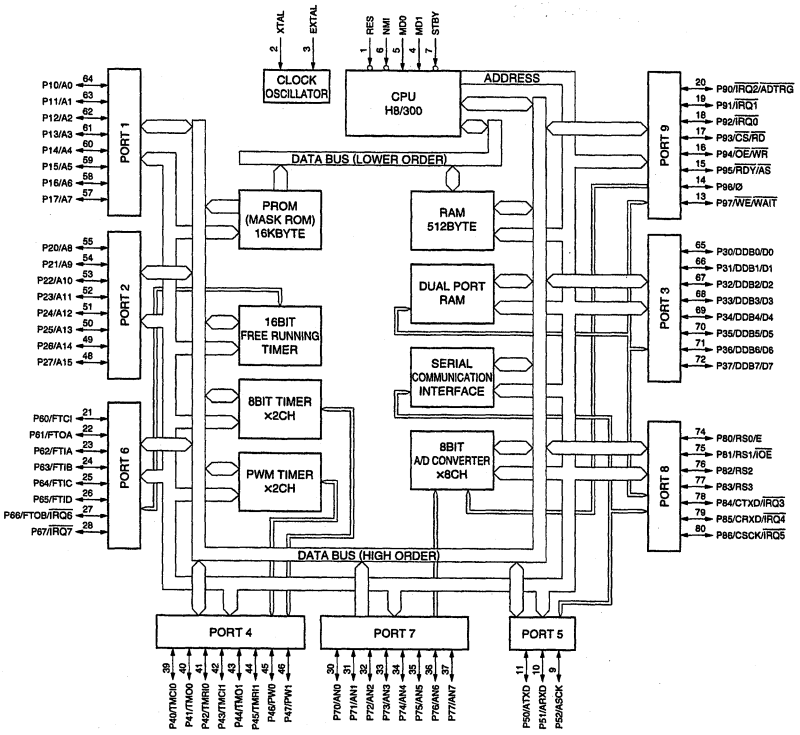

HD6417032F20 (HITACHI)

C-MOS 32-BIT RISC MICROCOMPUTER
—TOP VIEW—

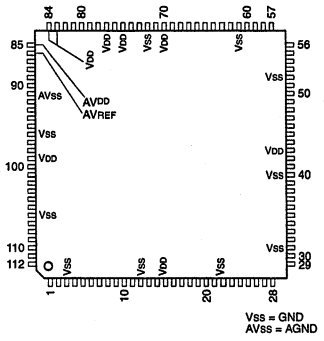

VSS = GND
AVSS = AGND

PIN No.	I/O	SIGNAL	PIN No.	I/O	SIGNAL	PIN No.	I/O	SIGNAL
1	I/O	PB14/TP14/$\overline{IRQ6}$	39	O	A15	77	—	VDD
2	I/O	PB15/TP15/$\overline{IRQ7}$	40	—	VSS	78	O	$\overline{WDTOVF}$
3	—	VSS	41	O	A16	79	I	$\overline{RES}$
4	I/O	AD0	42	O	A17	80	I	MD0
5	I/O	AD1	43	—	VDD	81	I	MD1
6	I/O	AD2	44	O	A18	82	I	MD2
7	I/O	AD3	45	O	A19	83	—	VDD
8	I/O	AD4	46	O	A20	84	—	VDD
9	I/O	AD5	47	O	A21	85	—	AVDD
10	I/O	AD6	48	O	$\overline{CS0}$	86	I	AVREF
11	I/O	AD7	49	O	$\overline{CS1}$/$\overline{CASH}$	87	I	PC0/AN0
12	—	VSS	50	O	$\overline{CS2}$	88	I	PC1/AN1
13	I/O	AD8	51	O	$\overline{CS3}$/$\overline{CASL}$	89	I	PC2/AN2
14	I/O	AD9	52	—	VSS	90	I	PC3/AN3
15	—	VDD	53	I/O	PA0/$\overline{CS4}$/TIOCA0	91	—	AVSS
16	I/O	AD10	54	I/O	PA1/$\overline{CS5}$/$\overline{RAS}$	92	I	PC4/AN4
17	I/O	AD11	55	I/O	PA2/$\overline{CS6}$/TIOCB0	93	I	PC5/AN5
18	I/O	AD12	56	I/O	PA3/$\overline{CS7}$/$\overline{WAIT}$	94	I	PC6/AN6
19	I/O	AD13	57	I/O	PA4/$\overline{WRL}$ (WR)	95	I	PC7/AN7
20	I/O	AD14	58	I/O	PA5/$\overline{WRH}$ ($\overline{LBS}$)	96	—	VSS
21	I/O	AD15	59	I/O	PA6/$\overline{RD}$	97	I/O	PB0/TP0/TIOCA2
22	—	VSS	60	I/O	PA7/$\overline{BACK}$	98	I/O	PB1/TP1/TIOCB2
23	O	A0 (HBS)	61	—	VSS	99	—	VDD
24	O	A1	62	I/O	PA8/$\overline{BREQ}$	100	I/O	PB2/TP2/TIOCA3
25	O	A2	63	I/O	PA9/$\overline{AH}$/$\overline{IRQOUT}$/$\overline{ADTRG}$	101	I/O	PB3/TP3/TIOCB3
26	O	A3	64	I/O	PA10/DPL/TIOCA1	102	I/O	PB4/TP4/TIOCA4
27	O	A4	65	I/O	PA11/DPH/TIOCB1	103	I/O	PB5/TP5/TIOCB4
28	O	A5	66	I/O	PA12/$\overline{IRQ0}$/DACK0/TCLKA	104	I/O	PB6/TP6/TOCXA4/TCLKC
29	O	A6	67	I/O	PA13/$\overline{IRQ1}$/$\overline{DREQ0}$/TCLKB	105	I/O	PB7/TP7/TOCXB4/TCLKD
30	O	A7	68	I/O	PA14/$\overline{IRQ2}$/DACK1	106	—	VSS
31	—	VSS	69	I/O	PA15/$\overline{IRQ3}$/$\overline{DREQ1}$	107	I/O	PB8/TP8/RXD0
32	O	A8	70	—	VDD	108	I/O	PB9/TP9/TXD0
33	O	A9	71	O	CK	109	I/O	PB10/TP10/RXD1
34	O	A10	72	—	VSS	110	I/O	PB11/TP11/TXD1
35	O	A11	73	I	EXTAL	111	I/O	PB12/TP12/$\overline{IRQ4}$/SCK0
36	O	A12	74	I	XTAL	112	I/O	PB13/TP13/$\overline{IRQ5}$/SCK1
37	O	A13	75	—	VDD			
38	O	A14	76	I	NMI			

INPUT

$\overline{ADTRG}$	: A/D CONVERSION TRIGGER
AN0 - AN7	: ANALOG
$\overline{BREQ}$	: BUS REQUEST
$\overline{DREQ0}$, $\overline{DREQ1}$	: DMA REQUEST
EXTAL	: CRYSTAL OSCILLATION OR EXTERNAL CLOCK
$\overline{IRQ0}$ - $\overline{IRQ7}$	: MASKABLE INTERRUPT REQUEST
LBS	: LOW BYTE STROBE
MD0 - MD2	: MODE CONTROL
NMI	: NON-MASKABLE INTERRUPT REQUEST
$\overline{RES}$	: RESET
RXD0, RXD1	: RECEIVE DATA
TCLKA - TCLKD	: ITU TIMER CLOCK
$\overline{WAIT}$	: WAIT
$\overline{WR}$	: WRITE
$\overline{WRH}$	: HIGH ORDER WRITE
$\overline{WRL}$	: LOW ORDER WRITE
XTAL	: CRYSTAL OSCILLATION

OUTPUT

A0 (HBS) - A21	: ADDRESS BUS
$\overline{AH}$	: ADDRESS HOLD
$\overline{BACK}$	: BUS REQUEST ACKNOWLEDGE
$\overline{CASH}$	: HIGH ORDER COLUMN ADDRESS STROBE
$\overline{CASL}$	: LOW ORDER COLUMN ADDRESS STROBE
CK	: SYSTEM CLOCK
$\overline{CS0}$ - $\overline{CS7}$	: CHIP SELECT
DACK0, DACK1	: DMA ACKNOWLEDGE
$\overline{IRQOUT}$	: SLAVE INTERRUPT REQUEST
$\overline{RAS}$	: ROW ADDRESS STROBE
$\overline{RD}$	: READ
TOCXA4	: ITU OUTPUT COMPARE A (CH4)
TOCXB4	: ITU OUTPUT COMPARE B (CH4)
TP0 - TP15	: TIMING PATTERN
TXD0, TXD1	: TRANSMISSION DATA
$\overline{WDTOVF}$	: WATCHDOG TIMER OVERFLOW

INPUT/OUTPUT

AD0 - AD15	: DATA BUS
DPH	: HIGH ORDER DATA BUS PARITY
DPL	: LOW ORDER DATA BUS PARITY
PA0 - PA15	: PORT A
PB0 - PB15	: PORT B
PC0 - PC7	: PORT C
SCK0, SCK1	: SERIAL CLOCK
TIOCA0 - TIOCA4	: ITU INPUT CAPTURE/OUTPUT COMPARE A (CH0 - 4)
TIOCB0 - TIOCB4	: ITU INPUT CAPTURE/OUTPUT COMPARE B (CH0 - 4)

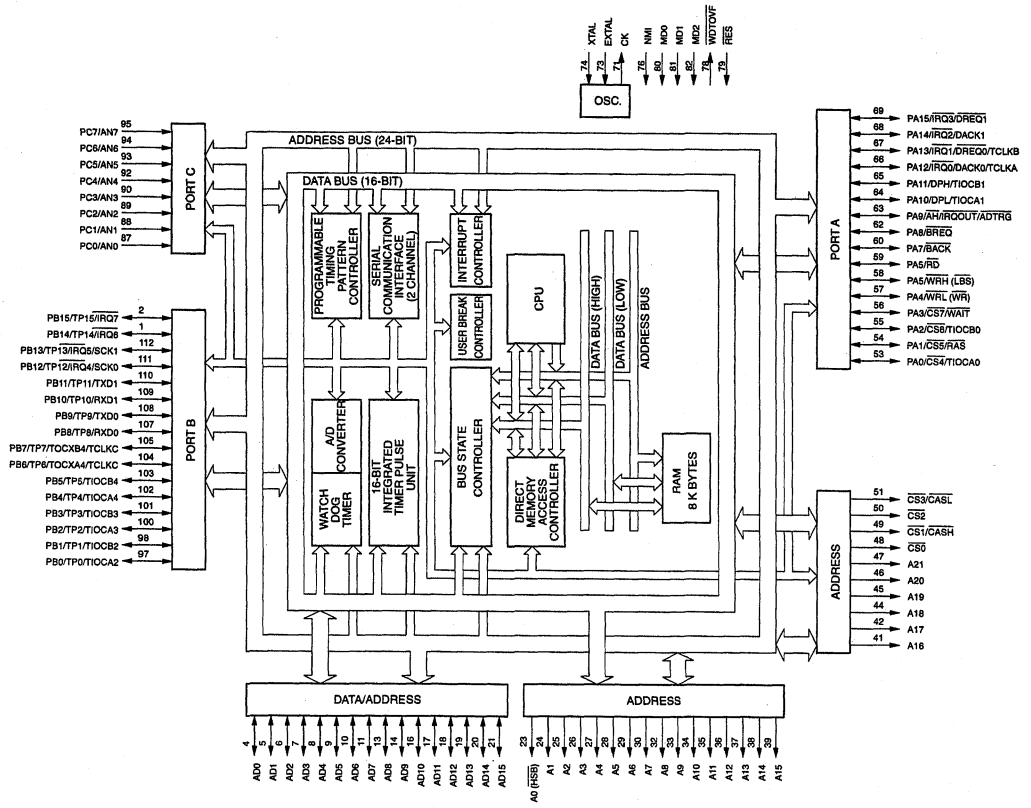
OSC.
XTAL
EXTAL
CK
NMI
MD0
MD1
MD2
WDTOVF
RES
PORT C
PC7/AN7
PC6/AN6
PC5/AN5
PC4/AN4
PC3/AN3
PC2/AN2
PC1/AN1
PC0/AN0
PORT B
PB15/TP15/IRQ7
PB14/TP14/IRQ6
PB13/TP13/IRQ5/SCK1
PB12/TP12/IRQ4/SCK0
PB11/TP11/TXD1
PB10/TP10/RXD1
PB9/TP9/TXD0
PB8/TP8/RXD0
PB7/TP7/TOCXB4/TCLKC
PB6/TP6/TOCXA4/TCLKC
PB5/TP5/TIOCB4
PB4/TP4/TIOCA4
PB3/TP3/TIOCB3
PB2/TP2/TIOCA3
PB1/TP1/TIOCB2
PB0/TP0/TIOCA2
ADDRESS BUS (24-BIT)
DATA BUS (16-BIT)
PROGRAMMABLE TIMING PATTERN CONTROLLER
SERIAL COMMUNICATION INTERFACE (2 CHANNEL)
INTERRUPT CONTROLLER
USER BREAK CONTROLLER
CPU
DATA BUS (HIGH)
DATA BUS (LOW)
ADDRESS BUS
A/D CONVERTER
WATCH DOG TIMER
16-BIT INTEGRATED TIMER PULSE UNIT
BUS STATE CONTROLLER
DIRECT MEMORY ACCESS CONTROLLER
RAM 8 K BYTES
PORT A
PA15/IRQ3/DREQ1
PA14/IRQ2/DACK1
PA13/IRQ1/DREQ0/TCLKB
PA12/IRQ0/DACK0/TCLKA
PA11/DPH/TIOCB1
PA10/DPL/TIOCA1
PA9/AH/IRQOUT/ADTRG
PA8/BREQ
PA7/BACK
PA5/RD
PA5/WRH (LBS)
PA4/WRL (WR)
PA3/CS7/WAIT
PA2/CS6/TIOCB0
PA1/CS5/RAS
PA0/CS4/TIOCA0
ADDRESS
CS3/CASL
CS2
CS1/CASH
CS0
A21
A20
A19
A18
A17
A16
DATA/ADDRESS
AD0
AD1
AD2
AD3
AD4
AD5
AD6
AD7
AD8
AD9
AD10
AD11
AD12
AD13
AD14
AD15
ADDRESS
A0 (HSB)
A1
A2
A3
A4
A5
A6
A7
A8
A9
A10
A11
A12
A13
A14
A15

IDT71V124S15Y-TL (IDT)

C-MOS 1 M (131,072 × 8)-BIT SRAM
—TOP VIEW—

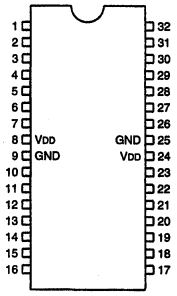

PIN No.	I/O	SIGNAL	PIN No.	I/O	SIGNAL
1	I	A3	17	I	A12
2	I	A2	18	I	A11
3	I	A1	19	I	A10
4	I	A0	20	I	A9
5	I	$\overline{CS}$	21	I	A8
6	I/O	I/O1	22	I/O	I/O5
7	I/O	I/O2	23	I/O	I/O6
8	—	VDD	24	—	VDD
9	—	GND	25	—	GND
10	I/O	I/O3	26	I/O	I/O7
11	I/O	I/O4	27	I/O	I/O8
12	I	$\overline{WE}$	28	I	$\overline{OE}$
13	I	A16	29	I	A7
14	I	A15	30	I	A6
15	I	A14	31	I	A5
16	I	A13	32	I	A4

INPUT
A0 - A16 : ADDRESS INPUTS
$\overline{CS}$: CHIP SELECT
$\overline{OE}$: OUTPUT ENABLE INPUT
$\overline{WE}$: WRITE ENABLE INPUT

INPUT/OUTPUT
I/O1 - I/O8 : DATA INPUTS/OUTPUTS

$\overline{CS}$	$\overline{OE}$	$\overline{WE}$	MODE	I/O
1	×	×	NON SELECT	HI-Z
0	1	1	OUTPUT DISABLE	HI-Z
0	0	1	READ	OUTPUT
0	×	0	WRITE	INPUT

0 : LOW LEVEL
1 : HIGH LEVEL
× : DON'T CARE
HI-Z : HIGH IMPEDANCE

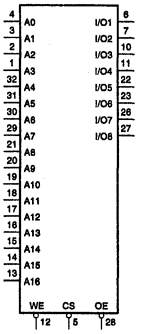

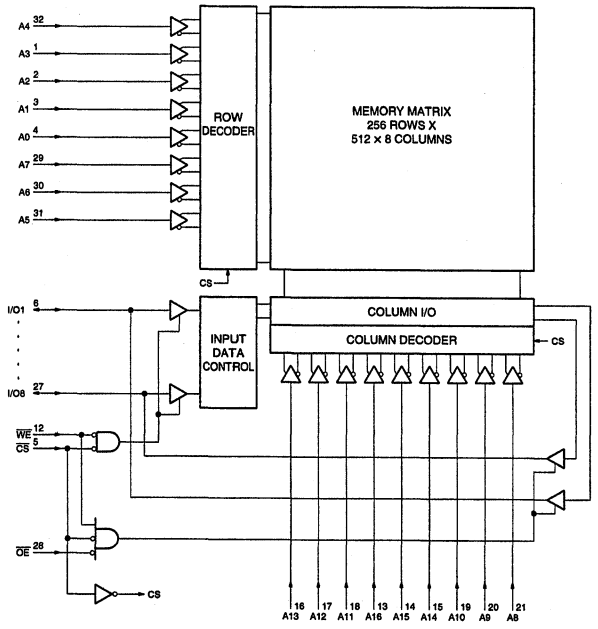

KM416V4104BS-L6 (SAMSUNG)

64 M (4,194,304 × 16)-BIT DRAM WITH EXTENDED DATA OUT
—TOP VIEW—

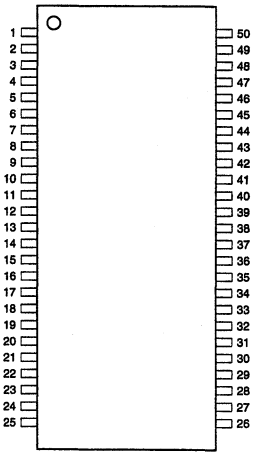

PIN NO.	I/O	SIGNAL	PIN NO.	I/O	SIGNAL
1	—	Vcc	26	—	GND
2	I/O	DQ0	27	I	A6
3	I/O	DQ1	28	I	A7
4	I/O	DQ2	29	I	A8
5	I/O	DQ3	30	I	A9
6	—	Vcc	31	I	A10
7	I/O	DQ4	32	I	A11
8	I/O	DQ5	33	I	A12 (NC)*
9	I/O	DQ6	34	—	NC
10	I/O	DQ7	35	—	NC
11	—	NC	36	O	$\overline{OE}$
12	—	Vcc	37	I	$\overline{UCAS}$
13	I	$\overline{W}$	38	I	$\overline{LCAS}$
14	I	$\overline{RAS}$	39	—	GND
15	—	NC	40	—	NC
16	—	NC	41	I/O	DQ8
17	—	NC	42	I/O	DQ9
18	—	NC	43	I/O	DQ10
19	I	A0	44	I/O	DQ11
20	I	A1	45	—	GND
21	I	A2	46	I/O	DQ12
22	I	A3	47	I/O	DQ13
23	I	A4	48	I/O	DQ14
24	I	A5	49	I/O	DQ15
25	—	Vcc	50	—	GND

* (NC) : NC FOR 4 K PRODUCT

INPUTS
A0 - A12 : ADDRESS (8 K PRODUCT: KM416V4004B)
A0 - A11 : ADDRESS (4 K PRODUCT: KM416V4104B)
$\overline{LCAS}$: LOWER COLUMN ADDRESS STROBE
$\overline{RAS}$: ROW ADDRESS STROBE
$\overline{UCAS}$: UPPER COLUMN ADDRESS STROBE
$\overline{W}$: READ/WRITE

OUTPUT
$\overline{OE}$: DATA ENABLE

INPUTS/OUTPUTS
DQ0 - DQ15 : DATA

KM48V8104BS-L6T (SAMSUNG)

64M (8,388,608×8)-BIT DRAM WITH EXTENDED DATA OUT
—TOP VIEW—

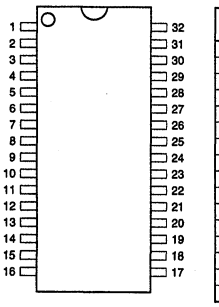

PIN NO.	I/O	SIGNAL	PIN NO.	I/O	SIGNAL
1	—	Vcc	17	—	GND
2	I/O	DQ0	18	I	A6
3	I/O	DQ1	19	I	A7
4	I/O	DQ2	20	I	A8
5	I/O	DQ3	21	I	A9
6	—	NC	22	I	A10
7	—	Vcc	23	I	A11
8	I	$\overline{W}$	24	I	A12 (NC)*
9	I	$\overline{RAS}$	25	I	$\overline{OE}$
10	I	A0	26	I	$\overline{CAS}$
11	I	A1	27	—	GND
12	I	A2	28	I/O	DQ4
13	I	A3	29	I/O	DQ5
14	I	A4	30	I/O	DQ6
15	I	A5	31	I/O	DQ7
16	—	Vcc	32	—	GND

* (NC) : NC FOR 4 K REFRESH PRODUCT

INPUTS
A0 - A12 : ADDRESS
$\overline{CAS}$: COLUMN ADDRESS STROBE
$\overline{OE}$: DATA ENABLE
$\overline{RAS}$: ROW ADDRESS STROBE
$\overline{W}$: READ/WRITE

INPUTS/OUTPUTS
DQ0 - DQ7 : DATA

OTHER
NC : NO CONNECTION

LA7205M (SANYO)
LA7205M-TE-L

AGC AMP, INPUT SELECT, AGC DET, COMPARATOR
—TOP VIEW—

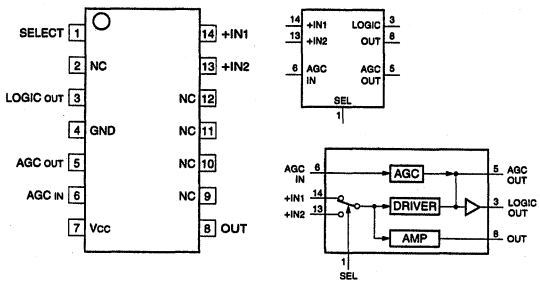

LM2903PW-E05 (TI)
NJM2903M (JRC)
NJM2903M-TE2

DUAL VOLTAGE COMPARATORS
—TOP VIEW—

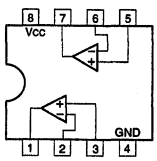

LM358PW (TI)
LM358PW-E05
NJM2904V(TE2) (JRC)
UPC4572G2-E2 (NEC)

DUAL OPERATIONAL AMPLIFIERS
(SINGLE-SUPPLY TYPE)
—TOP VIEW—

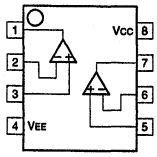

LM35DM (NS)
LM35DMX

TEMPERATURE SENSOR
—TOP VIEW—

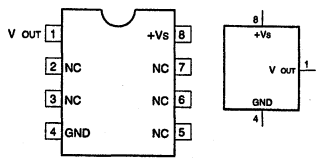

LC35256DT-70-TLM (SANYO)

C-MOS 256 K (32,768 × 8)-BIT SRAM
—TOP VIEW—

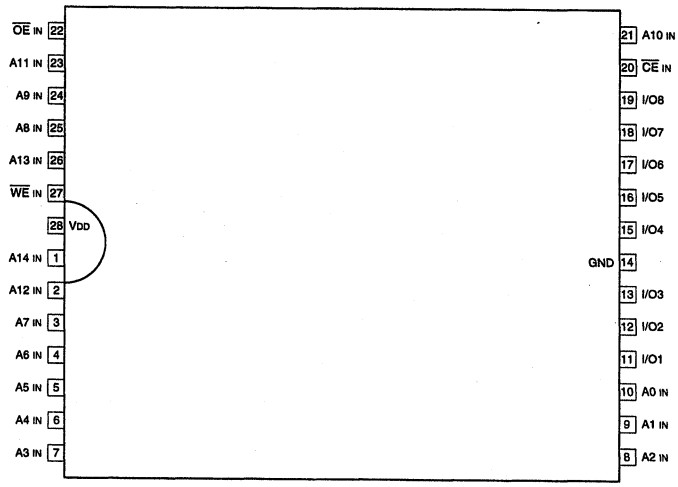

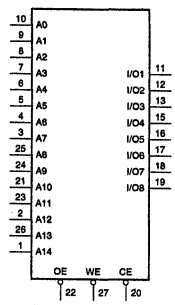

A0 - A14 : ADDRESS INPUTS
CE : CHIP ENABLE INPUT
I/O1 - I/O8 : DATA INPUTS/OUTPUTS
OE : OUTPUT ENABLE INPUT
WE : WRITE ENABLE INPUT

CE	OE	WE	MODE	I/O TERMINAL
1	×	×	NOT SELECT	HIGH IMPEDANCE
0	1	1	OUTPUT DISABLE	HIGH IMPEDANCE
0	0	1	READ	OUTPUT DATA
0	×	0	WRITE	INPUT DATA

0 ; LOW LEVEL
1 ; HIGH LEVEL
× ; DON'T CARE

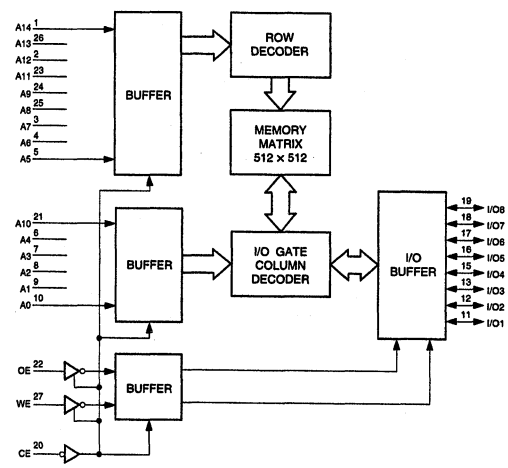

M5201FP (MITSUBISHI)
M5201FP-600D

DUAL OPERATIONAL AMPLIFIERS WITH SWITCHED OUTPUT
—TOP VIEW—

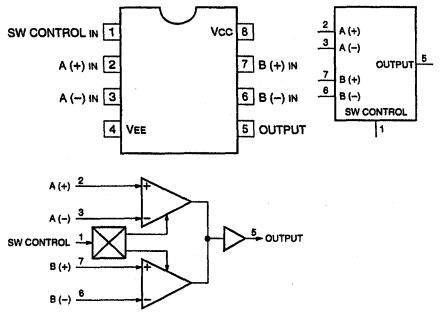

MAX202CSE (MAXIM)
MAX202CSE-T

RS-232 TRANSMITTER/RECEIVER
—TOP VIEW—

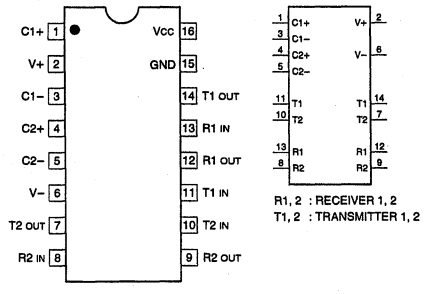

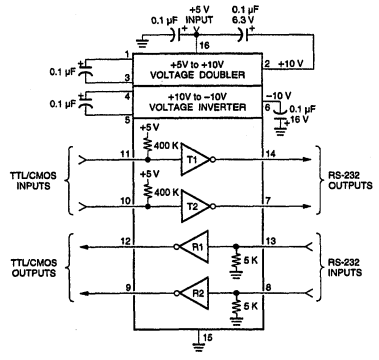

M62352GP (MITSUBISHI)
M62352GP-75ED

C-MOS 8-BIT × 12-CHANNEL D/A CONVERTER
(WITH BUFFER OPERATIONAL AMPLIFIER)
—TOP VIEW—

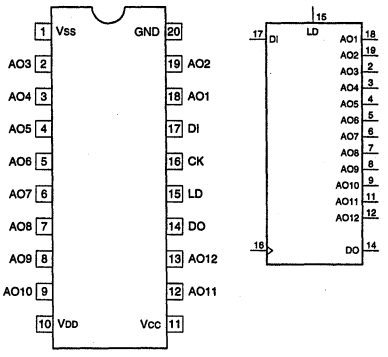

AO1 - AO12 : 8-BIT D/A OUTPUTS
CK : CLOCK INPUT
DI : SERIAL DATA INPUT
DO : DATA OUTPUT

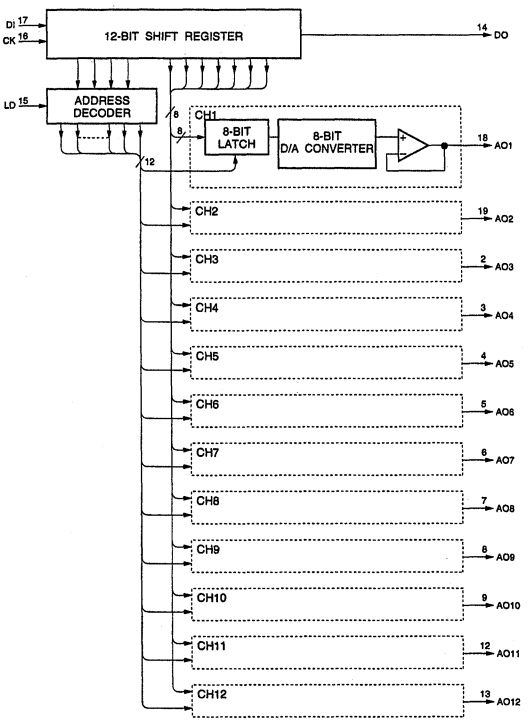

MB3761PF-ER (FUJITSU)

VOLTAGE DETECTOR
—TOP VIEW—

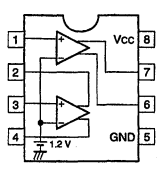

MAX703CSA-TE2 (MAXIM)

MICROPROCESSOR SUPERVISORY CIRCUIT
—TOP VIEW—

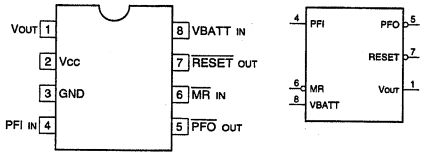

INPUT
MR : MANUAL RESET
PFI : POWER FAIL
VBATT : BACKUP BATTERY

OUTPUT
PFO : POWER FAIL
RESET : RESET
VOUT : POWER SUPPLY TO CMOS RAM

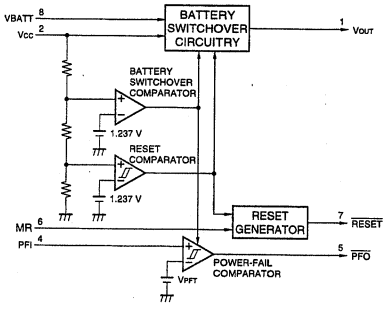

MB3793-42PNF (FUJITSU)
MB3793-42PNF-ER

BIPOLA SOURCE VOL TAGE SUPERVISOR
—TOP VIEW—

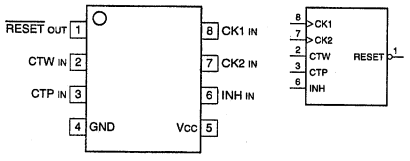

INPUT
CK1 : CLOCK 1
CK2 : CLOCK 2
CTP : POWER ON RESET HOLD TIME PRESET
CTW : WATCHDOG TIMER SUPERVISION TIME PRESET
INH : INHIBIT

OUTPUT
RESET : RESET

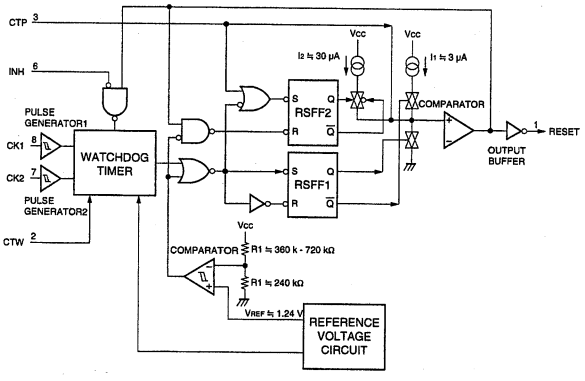

MB88346BPFV (FUJITSU)
MB88346BPFV-EF

C-MOS 8-BIT D/A CONVERTER
—TOP VIEW—

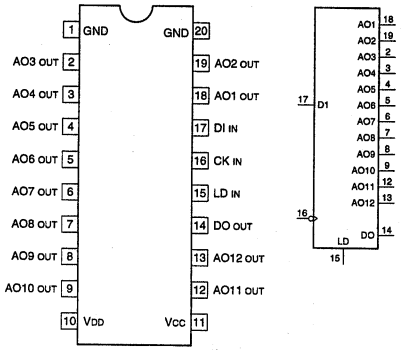

AO1 - AO12 : 8-BIT D/A OUTPUTS
CK : CLOCK INPUT
DI : SERIAL DATA INPUT
DO : DATA OUTPUT
LD : DATA LOAD CONTROL INPUT (H : LOAD)

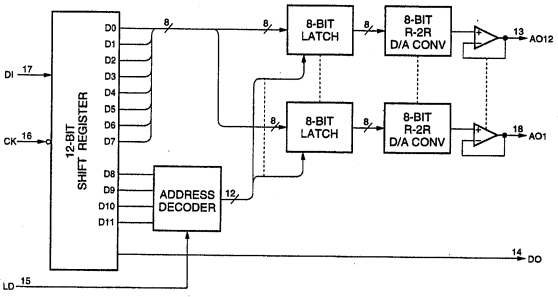

MBM29F040C-90PD (FUJITSU)

C-MOS 4 M (524,288 × 8)-BIT FLASH MEMORY
—TOP VIEW—

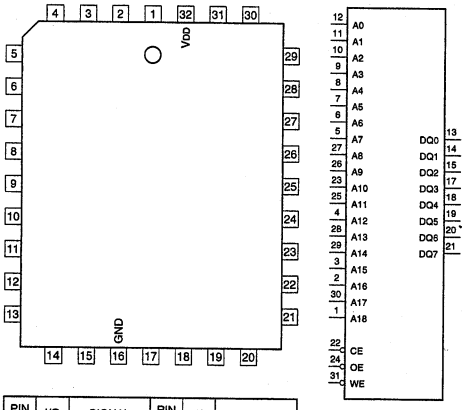

PIN No.	I/O	SIGNAL	PIN No.	I/O	SIGNAL
1	I	A18	17	I/O	DQ3
2	I	A16	18	I/O	DQ4
3	I	A15	19	I/O	DQ5
4	I	A12	20	I/O	DQ6
5	I	A7	21	I/O	DQ7
6	I	A6	22	I	$\overline{CE}$
7	I	A5	23	I	A10
8	I	A4	24	I	$\overline{OE}$
9	I	A3	25	I	A11
10	I	A2	26	I	A9
11	I	A1	27	I	A8
12	I	A0	28	I	A13
13	I/O	DQ0	29	I	A14
14	I/O	DQ1	30	I	A17
15	I/O	DQ2	31	I	$\overline{WE}$
16	—	GND	32	—	VDD

INPUT
A0 - A18 : ADDRESS INPUTS
$\overline{CE}$: CHIP ENABLE
$\overline{OE}$: OUTPUT ENABLE
$\overline{WE}$: WRITE ENABLE

INPUT/OUTPUT
DQ0 - DQ7 : DATA INPUT/OUTPUT

MB88351PFV (FUJITSU)
MB88351PFV-ER

C-MOS 12-BIT D/A CONVERTER WITH OPERATIONAL AMPLIFIER
—TOP VIEW—

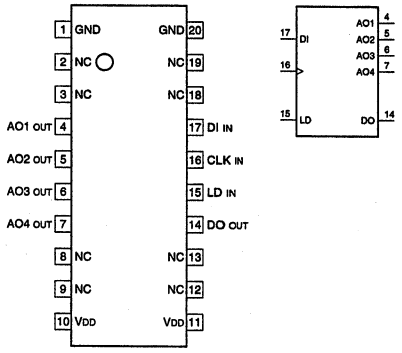

INPUT
CLK : CHIFT CLOCK
DI : SERIAL DATA
LD : DECODER AND D/A REGISTER TO LOAD

OUTPUT
AO1 - AO4 : ANALOG DATA
DO : MBS BIT DATA IN 15-BIT SHIFT REGISTER

D12	D13	D14	ADDRESS SELECT
0	0	0	DON'T CARE
0	0	1	AO1 SELECT
0	1	0	AO2 SELECT
0	1	1	AO3 SELECT
1	0	0	AO4 SELECT
1	0	1	DON'T CARE
1	1	0	DON'T CARE
1	1	1	DON'T CARE

0 : LOW LEVEL
1 : HIGH LEVEL

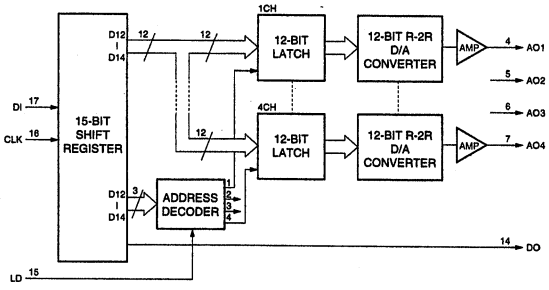

MC34151DR2 (MOTOROLA)

HIGH SPEED MOS FET DRIVER
—TOP VIEW—

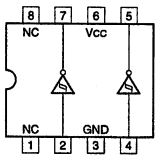

MC14094BF (MOTOROLA)
MC14094BFEL

C-MOS 8-STAGE SHIFT-AND-STORE BUS REGISTER
—TOP VIEW—

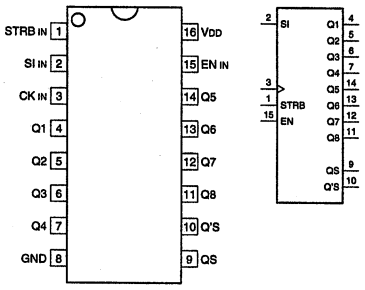

INPUTS
SI : SERIAL DATA
CK : CLOCK
STRB : STROBE
EN : OUTPUT ENABLE

OUTPUTS
Q1 - Q8 : PARALLEL DATA
QS, Q'S : SERIAL DATA

INPUTS				PARALLEL OUT		SERIAL OUT	
CK	EN	STRB	SI	Q1	Qn	QS	Q's
↑	0	×	×	HI-Z	HI-Z	Q7	NC
↓	0	×	×	HI-Z	HI-Z	NC	Q7
↑	1	0	×	NC	NC	Q7	NC
↑	1	1	0	0	Qn-1	Q7	NC
↑	1	1	1	1	Qn-1	Q7	NC
↓	1	1	1	NC	NC	NC	Q7

0 : LOW LEVEL
1 : HIGH LEVEL
× : DON'T CARE
HI-Z : HIGH IMPEDANCE
NC : NO CHANGE

NJM082BM(TE2)
NJM082M (JRC)
NJM2041M-D (JRC)
NJM2041M-D(TE2)
NJM4562D-D (JRC)
NJM4565M-A (JRC)
NJM4565M-A(TE2)
TL062CPW (TI)
TL062CPW-E05
TL072CPS (TI)
TL072CPS-E05
TL082CPW-E05 (TI)

DUAL OPERATIONAL AMPLIFIERS
(DUAL-SUPPLY TYPE)
—TOP VIEW—

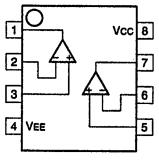

NJM3403AM (JRC)
NJM3403AM(TE2)

QUAD OPERATIONAL AMPLIFIER
—TOP VIEW—

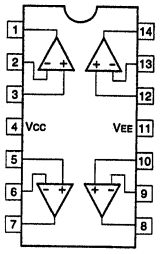

NJM386M(TE2) (JRC)

AUDIO POWER AMPLIFIER
—TOP VIEW—

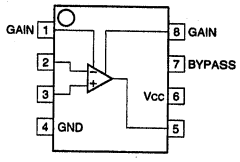

NJM431U (JRC)
NJM431U-TE1

ADJUSTABLE PRECISION SHUNT REGULATOR
—FRONT VIEW—

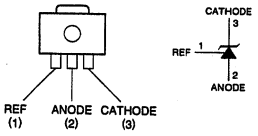

NJU7021V-TE2 (JRC)

C-MOS OPERATION AMPLIFIER
—TOP VIEW—

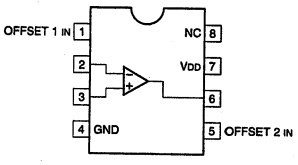

NJU7024M (JRC)
NJU7024V-TE2
NJU7034V-TE2 (JRC)

C-MOS 4-CIRCUIT OPERATION AMPLIFIER
—TOP VIEW—

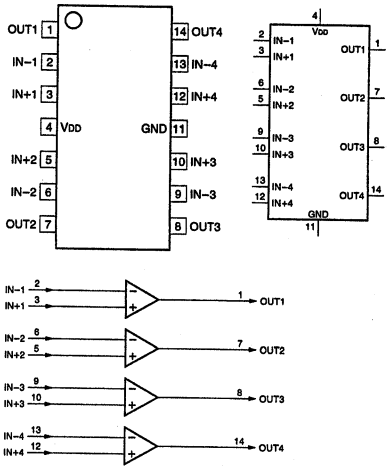

PCF8574T-T (PHILIPS)

C-MOS REMOTE 8-BIT I/O EXPANDER
—TOP VIEW—

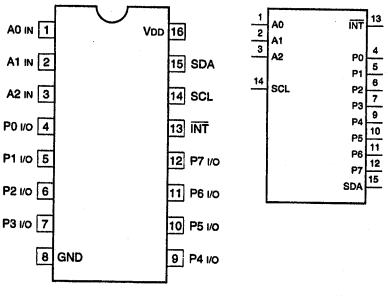

INPUT
A0 - A2 ; ADDRESS INPUTS
SCL ; SYSTEM CLOCK LINE

OUTPUT
$\overline{INT}$; INTERRUPT OUTPUT
SDA ; SERIAL DATA LINE

INPUT/OUTPUT
P0 - P7 ; 8-BITS QUASI-BIDIRECTIONAL I/O PORT

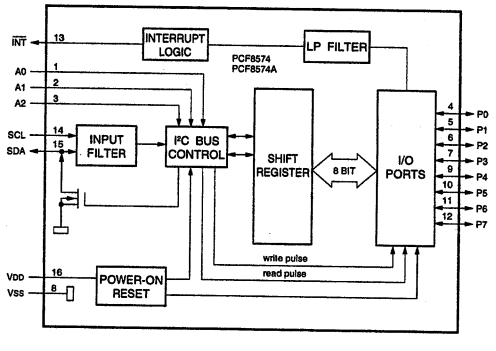

PCM1716E-BT2 (BURR-BROWN)

24-BIT AUDIO DA CONVERTER
—TOP VIEW—

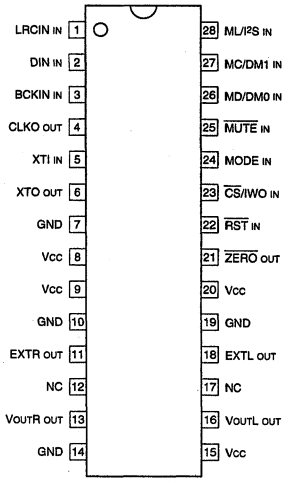

INPUTS

BCKIN	:	BIT CLOCK
CS/IWO	:	CHIP SELECT/ INPUT FORMAT SELECTION
DIN	:	SERIAL AUDIO DATA
LRCIN	:	LEFT AND RIGHT CLOCK
MC/DM1	:	MODE CONTROL, BCK/ DE-EMPHASIS SELECTION 2
MD/DM0	:	MODE CONTROL, DATA/ DE-EMPHASIS SELECTION 1
ML/I2S	:	MODE CONTROL, WDCK/ INPUT FORMAT SELECTION
MODE	:	MODE CONTROL SELECT
MUTE	:	MUTE CONTROL
RST	:	RESET
XTI	:	OSCILLATOR

OUTPUTS

CLKO	:	SYSTEM CLOCK
EXTL	:	COMMON PIN OF ANALOG OUTPUT AMPLIFIER
EXTR	:	COMMON PIN OF ANALOG OUTPUT AMPLIFIER
VOUTL	:	ANALOG VOLTAGE (L-CH)
VOUTR	:	ANALOG VOLTAGE (R-CH)
XTO	:	OSCILLATOR
ZERO	:	ZERO DATA FLAG

OTHER

NC	:	NO CONNECTION

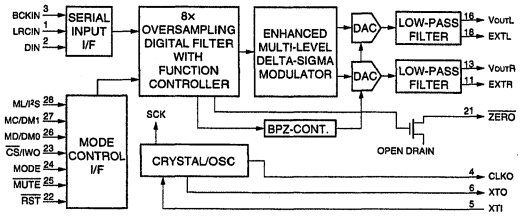

REF-03GSR (PMI)

REFERENCE/TEMPERATURE TRANSDUCER
—TOP VIEW—

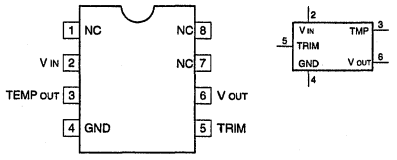

V IN ; INPUT VOLTAGE
TEMP OUT ; TEMPERATURE TRANSDUCER VOLTAGE OUTPUT
TRIM IN ; OUTPUT SIGNAL RIMMING
V OUT ; OUTPUT VOLTAGE

RH5VL25AA-T1 (RICOH)
RH5VL40AA-T1 (RICOH)

VOLTAGE DETECTOR
—TOP VIEW—

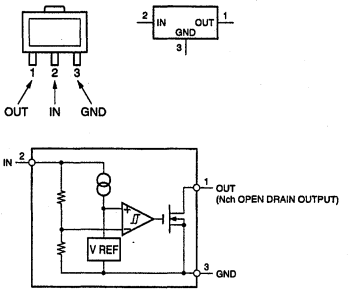

S-80740AN-D4-S (SEIKO I&E)
S-80740AN-D4-T1

C-MOS VOLTAGE DETECTOR
—TOP VIEW—

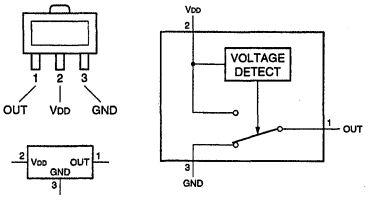

ITEM	VOLTAGE DETECT (V)	OUTPUT TYPE
S-8051ANB	1.00 - 1.10	Nch
S-8051ANR	1.10 - 1.20	OPEN DRAIN
S-8052ALQ	2.40 - 2.60	C-MOS
S-8052ALY	2.60 - 2.80	
S-8053ALB	2.80 - 3.10	
S-8053ALR	3.10 - 3.40	
S-8054ALB	4.00 - 4.30	
S-8054ALR	4.30 - 4.60	
S-8054HN	3.80 - 4.20	Nch
S-8054HNM	4.50 - 4.70	OPEN DRAIN

S-81230SGUP-DQB-T1 (SEIKO I&E)
S-81240SGUP-DQJ-T1 (SEIKO I&E)

THREE TERMINAL POSITIVE VOLTAGE REGULATOR
—TOP VIEW—

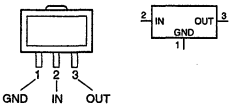

S-875045CUP-ACA-T2 (SEIKO I&E)

VOLTAGE REGULATOR WITH RESET
—TOP VIEW—

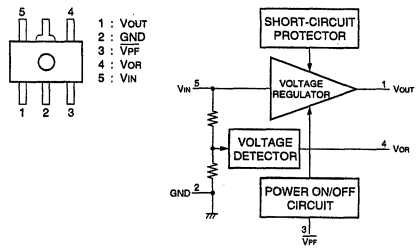

SN74CBT16212DGGR (TI)

C-MOS 24-BIT BUS-EXCHANGE SWITCH
—TOP VIEW—

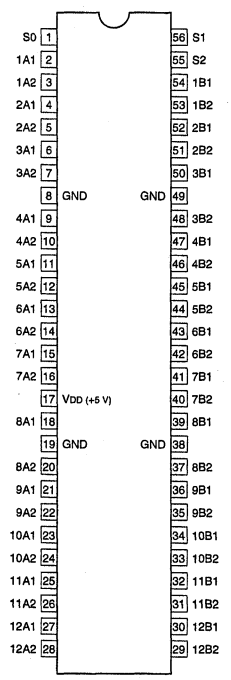

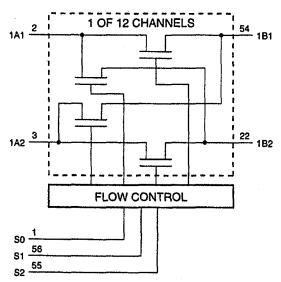

S2	S1	S0	A1	A2	FUNCTION
0	0	0	HI-Z	HI-Z	DISCONNECT (OPEN)
0	0	1	B1	HI-Z	A1=B1
0	1	0	B2	HI-Z	A1=B2
0	1	1	Z	B1	A2=B1
1	0	0	Z	B2	A2=B2
1	0	1	HI-Z	HI-Z	DISCONNECT (OPEN)
1	1	0	B1	B2	A1=B1, A2=B2
1	1	1	B2	B1	A1=B2, A2=B1

0 : LOW LEVEL
1 : HIGH LEVEL
HI-Z : HIGH IMPEDANCE

SN74HC00ANS (TI)
SN74HC00ANS-E05
TC74VHC00FT(EL) (TOSHIBA)
TC74VHCT00AFT(EL) (TOSHIBA)

C-MOS QUAD 2-INPUT NAND GATES
—TOP VIEW—

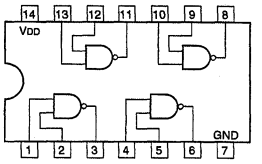

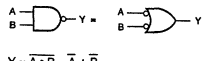

$Y = \overline{A \cdot B} = \overline{A} + \overline{B}$

A	B	Y
0	0	1
0	1	1
1	0	1
1	1	0

0 ; LOW LEVEL
1 ; HIGH LEVEL

SN74HC04APW-E05
SN74HC04APW-E20 (TI)
SN74HCT04APW-E05 (TI)
SN74LV04APWR (TI)
TC74VHC04FT(EL) (TOSHIBA)
TC74VHCT04AFT(EL) (TOSHIBA)
TC74VHCU04FT(EL) (TOSHIBA)

C-MOS HEX INVERTERS
—TOP VIEW—

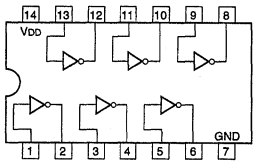

$Y = \overline{A}$

A	Y
0	1
1	0

0 : LOW LEVEL
1 : HIGH LEVEL

SN74HC08APW-E05 (TI)
TC74VHC08FT(EL) (TOSHIBA)
TC74VHCT08AFT(EL) (TOSHIBA)

C-MOS QUAD 2-INPUT AND GATES
—TOP VIEW—

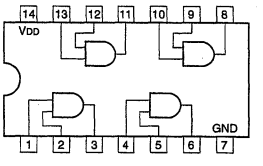

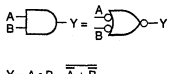

$Y = A \cdot B = \overline{\overline{A} + \overline{B}}$

A	B	Y
0	0	0
0	1	0
1	0	0
1	1	1

0 : LOW LEVEL
1 : HIGH LEVEL

SN74HC10APW-E05 (TI)
TC74VHC10FT(EL) (TOSHIBA)

C-MOS 3-INPUT NAND GATE
—TOP VIEW—

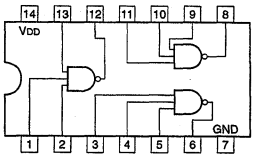

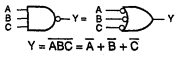

$Y = \overline{ABC} = \overline{A} + \overline{B} + \overline{C}$

A	B	C	Y
0	0	0	1
0	0	1	1
0	1	0	1
0	1	1	1
1	0	0	1
1	0	1	1
1	1	0	1
1	1	1	0

0 : LOW LEVEL
1 : HIGH LEVEL

SN74HC164APW-E05 (TI)
TC74VHC164FT(EL) (TOSHIBA)

C-MOS 8-BIT SERIAL-IN/PARALLEL-OUT SHIFT REGISTER
—TOP VIEW—

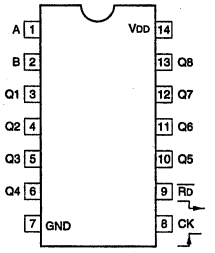

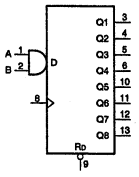

INPUTS				OUTPUTS			
RD	CK	A	B	Q1	Q2	---	Q8
0	×	×	×	0	0	0	0
1	0	×	×	Q1o	Q2o	---	Q8o
1	↑	1	1	1	Q1n	---	Q7n
1	↑	0	×	0	Q1n	---	Q7n
1	↑	×	0	0	Q1n	---	Q7n

0 : LOW LEVEL
1 : HIGH LEVEL
× : DON'T CARE

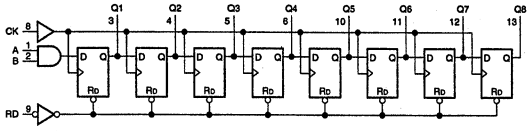

SN74LS123NS (TI)
SN74LS123NS-E05

TTL RETRIGGERABLE MONOSTABLE MULTIVIBRATORS WITH DIRECT RESET
—TOP VIEW—

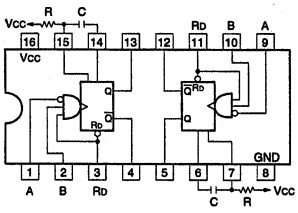

INPUTS			OUTPUTS	
RD	A	B	Q	Q̄
0	×	×	0	1
×	1	×	0	1
×	×	0	0	1
1	0	↑	⊓	⊔
1	↓	1	⊓	⊔
↑	0	1	⊓	⊔

0 : LOW LEVEL
1 : HIGH LEVEL
× : DON'T CARE

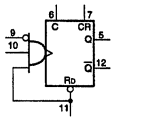

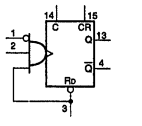

OUTPUT PULSE WIDTH

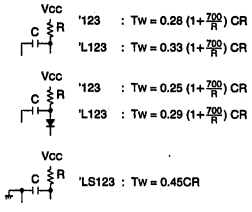

SN74HC32APW-E05 (TI)
TC74VHC32FT(EL) (TOSHIBA)

C-MOS QUAD 2-INPUT OR GATES
—TOP VIEW—

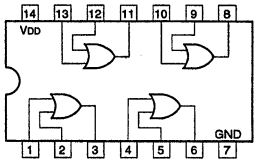

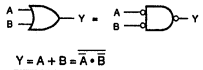

$Y = A + B = \overline{\overline{A} \cdot \overline{B}}$

A	B	Y
0	0	0
0	1	1
1	0	1
1	1	1

0 : LOW LEVEL
1 : HIGH LEVEL

SSM-2142P (PMI)

BALANCED LINE DRIVER
—TOP VIEW—

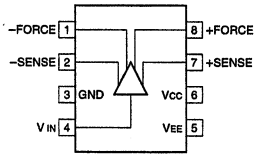

SN74HCT244APW-E05 (TI)
TC74VHC244FT(EL) (TOSHIBA)

C-MOS BUS BUFFER WITH 3-STATE OUTPUTS
—TOP VIEW—

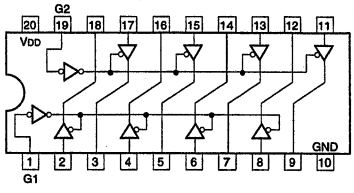

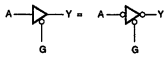

G	A	Y
0	0	0
0	1	1
1	×	HI-Z

0 : LOW LEVEL
1 : HIGH LEVEL
× : DON'T CARE
HI-Z : HIGH IMPEDANCE

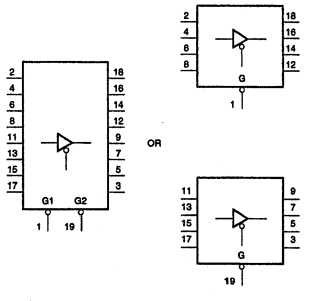

TC4053BFT(EL,N) (TOSHIBA)

C-MOS TRIPLE 2-CHANNEL ANALOG MULTIPLEXERS/DEMULTIPLEXERS
—TOP VIEW—

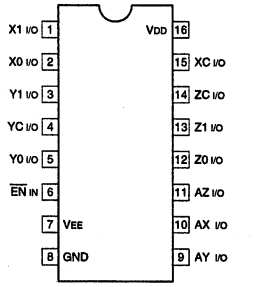

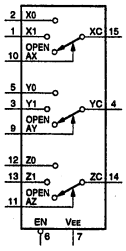

CONT. INPUTS		ON
EN	A (X, Y, Z)	CHANNEL
0	0	0
0	1	1
1	×	OPEN

0 : LOW LEVEL
1 : HIGH LEVEL
× : DON'T CARE

SN74LVC821APW-E05 (TI)

C-MOS 10-BIT BUS INTERFACE FLIP-FLOPS WITH 3-STATE OUTPUTS
—TOP VIEW—

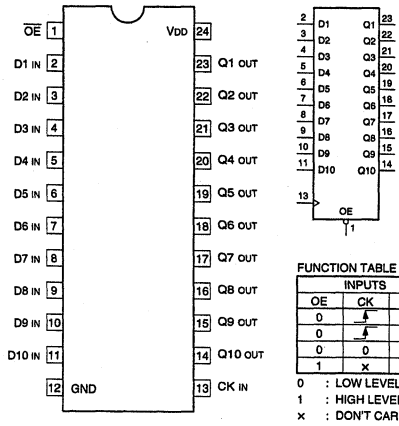

FUNCTION TABLE (EACH FLIP-FLOP)

INPUTS			OUTPUTS
OE	CK	D	Q
0	↑	1	1
0	↑	0	0
0	0	×	Q0
1	×	×	HI-Z

0 : LOW LEVEL
1 : HIGH LEVEL
× : DON'T CARE
HI-Z : HIGH IMPEDANCE

LOGIC DIAGRAM (POSITIVE LOGIC)

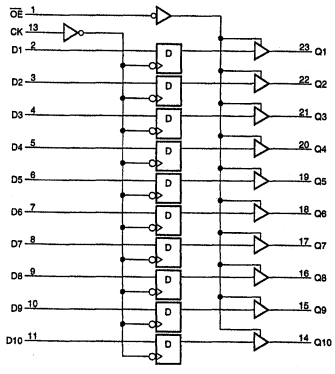

TC4066BFT(EL,N) (TOSHIBA)

C-MOS QUAD BILATERAL ANALOG SWITCH
—TOP VIEW—

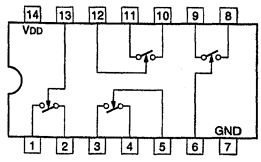

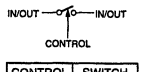

CONTROL	SWITCH
0	OFF
1	ON

0 : LOW LEVEL
1 : HIGH LEVEL

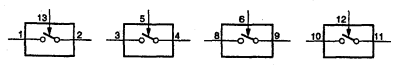

STK14C88-N45I (SIMTEK)

256K (32,768 x 8)-BIT NONVOLATILE SRAM
—TOP VIEW—

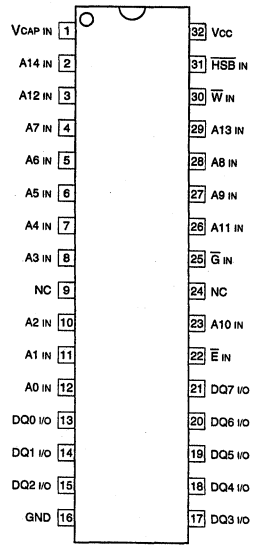

INPUTS
A0 - A14 : ADDRESS
E : CHIP ENABLE
G : OUTPUT ENABLE
HSB : HARDWARE STORE BUSY
W : WRITE ENABLE
VCAP : CAPACITOR

INPUTS/OUTPUTS
DQ0 - DQ7 : DATA

OTHER
NC : NO CONNECTION

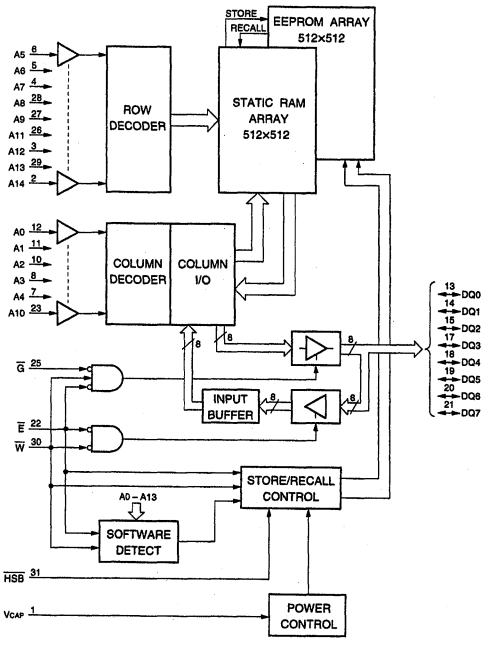

TC4S01F (TOSHIBA)
TC4S01F(TE85R)
TC7S02FU(TE85R)
TC7S02FU-TE85L (TOSHIBA)
TC7SH02FU (TOSHIBA)
TC7SH02FU-TE85R

C-MOS 2-INPUT NOR GATE
—TOP VIEW—

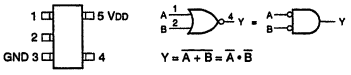

A	B	Y
0	0	1
0	1	0
1	0	0
1	1	0

0 : LOW LEVEL
1 : HIGH LEVEL

TC4S30F (TOSHIBA)
TC4S30F(TE85R)
TC7S86FU (TOSHIBA)
TC7S86FU(TE85R)
TC7SH86FU-TE85R (TOSHIBA)

C-MOS 2-INPUT EXCLUSIVE OR GATE
—TOP VIEW—

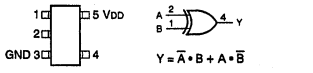

A	B	Y
0	0	0
0	1	1
1	0	1
1	1	0

0 : LOW LEVEL
1 : HIGH LEVEL

TC4S66F (TOSHIBA)
TC4S66F(TE85R)
TC7S66FU (TOSHIBA)
TC7S66FU(TE85R)

C-MOS BILATERAL ANALOG SWITCH
—TOP VIEW—

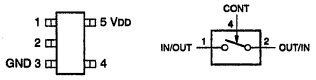

CONT	SWITCH
0	OFF
1	ON

0 : LOW LEVEL
1 : HIGH LEVEL

TC4S81F(TE85R) (TOSHIBA)
TC7S08F (TOSHIBA)
TC7S08F(TE85R)
TC7S08FU(TE85R) (TOSHIBA)
TC7SET08F(TE85L) (TOSHIBA)
TC7SET08FU(TE85R) (TOSHIBA)
TC7SH08FU-TE85R (TOSHIBA)

C-MOS 2-INPUT AND GATE
—TOP VIEW—

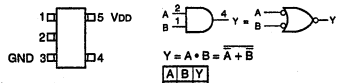

A	B	Y
0	0	0
0	1	0
1	0	0
1	1	1

0 : LOW LEVEL
1 : HIGH LEVEL

TC4SU69F (TOSHIBA)
TC4SU69F(TE85R)
TC7S04FU(TE85R) (TOSHIBA)
TC7SH04FU (TOSHIBA)
TC7SH04FU-TE85R

C-MOS INVERTER
—TOP VIEW—

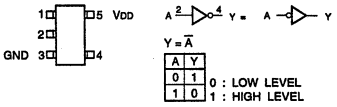

A	Y
0	1
1	0

0 : LOW LEVEL
1 : HIGH LEVEL

TC4W53FU (TOSHIBA)
TC4W53FU(TE12R)

C-MOS 2-CHANNEL MULTIPLEXER/DEMULTIPLEXER
—TOP VIEW—

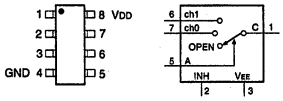

CONT. INPUT		ON
INH	A	CHANNEL
0	0	ch0
0	1	ch1
1	×	OPEN

0 : LOW LEVEL
1 : HIGH LEVEL
× : DON'T CARE

TC74AC86F (TOSHIBA)
TC74VHC86FT(EL) (TOSHIBA)

C-MOS QUAD EXCLUSIVE OR GATES
—TOP VIEW—

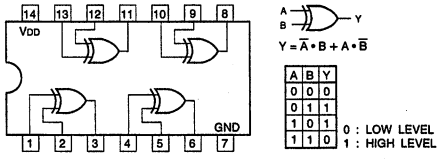

A	B	Y
0	0	0
0	1	1
1	0	1
1	1	0

0 : LOW LEVEL
1 : HIGH LEVEL

TC74HC4052AFT(EL) (TOSHIBA)

C-MOS DUAL 4-CHANNEL ANALOG MULTIPLEXER/DEMULTIPLEXER
—TOP VIEW—

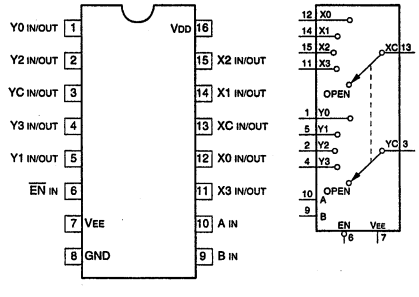

CONTROL INPUTS			"ON" CHANNEL
EN	B	A	
0	0	0	0
0	0	1	1
0	1	0	2
0	1	1	3
1	×	×	OPEN

0 : LOW LEVEL
1 : HIGH LEVEL
× : DON'T CARE

TC74HC4053AFT(EL) (TOSHIBA)

C-MOS TRIPLE 2-CHANNEL ANALOG MULTIPLEXER/DEMULTIPLEXER

—TOP VIEW—

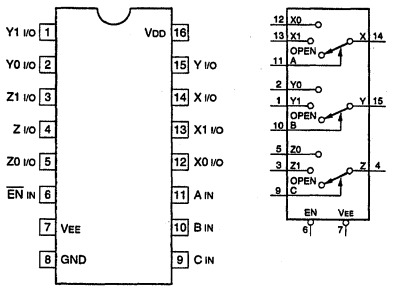

CONTROL INPUTS						
EN	SELECT			ON CHANNEL		
	C	B	A			
0	0	0	0	Z0	Y0	X0
0	0	0	1	Z0	Y0	X1
0	0	1	0	Z0	Y1	X0
0	0	1	1	Z0	Y1	X1
0	1	0	0	Z1	Y0	X0
0	1	0	1	Z1	Y0	X1
0	1	1	0	Z1	Y1	X0
0	1	1	1	Z1	Y1	X1
1	×	×	×	OPEN		

0 : LOW LEVEL
1 : HIGH LEVEL
× : DON'T CARE

TC74HC4538AFT(EL) (TOSHIBA)

C-MOS DUAL RETRIGGERABLE/NON-RETRIGGERABLE MONOSTABLE MULTIVIBRATOR

—TOP VIEW—

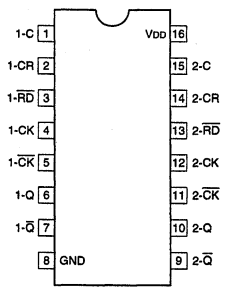

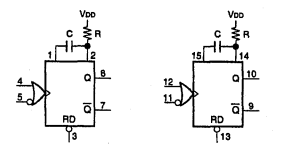

RETRIGGERABLE M. M. V

NON-RETRIGGERABLE M. M. V

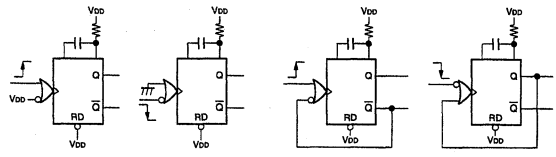

TC74VHC02FT(EL) (TOSHIBA)

C-MOS QUAD 2-INPUT NOR GATES

—TOP VIEW—

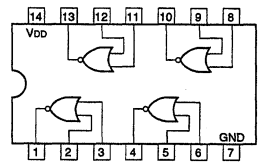

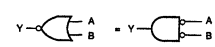

$Y = \overline{A + B} = \overline{A} \cdot \overline{B}$

A	B	Y
0	0	1
0	1	0
1	0	0
1	1	0

0 : LOW LEVEL
1 : HIGH LEVEL

TC74VHC11FT(EL) (TOSHIBA)

C-MOS 3-INPUT POSITIVE-AND GATE

—TOP VIEW—

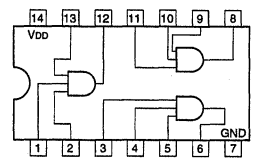

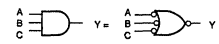

$Y = A \cdot B \cdot C = \overline{\overline{A} + \overline{B} + \overline{C}}$

A	B	C	Y
0	0	0	0
0	0	1	0
0	1	0	0
0	1	1	0
1	0	0	0
1	0	1	0
1	1	0	0
1	1	1	1

0 ; LOW LEVEL
1 ; HIGH LEVEL

TC74VHC123AFT(EL) (TOSHIBA)

C-MOS DUAL RETRIGGERABLE MONOSTABLE MULTIVIBRATORS

—TOP VIEW—

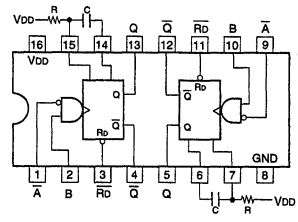

INPUTS			OUTPUTS	
RD	A	B	Q	$\overline{Q}$
0	×	×	0	1
1	1	×	0	1
1	×	0	0	1
1	0	↑	⊓	⊔
1	↓	1	⊓	⊔
↑	0	1	⊓	⊔

0 : LOW LEVEL
1 : HIGH LEVEL
× : DON'T CARE

OUTPUT PULSE WIDTH = 0.46 CR

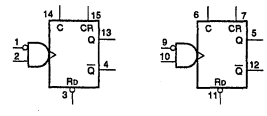

TC74VHC125FT(EL) (TOSHIBA)

C-MOS BUS BUFFER GATES WITH 3-STATE OUTPUT

—TOP VIEW—

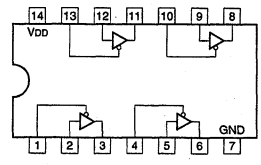

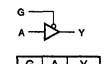

G	A	Y
0	0	0
0	1	1
1	×	HI-Z

0 : LOW LEVEL
1 : HIGH LEVEL
× : DON'T CARE
HI-Z : HIGH IMPEDANCE

TC74VHC138FT(EL) (TOSHIBA)

C-MOS 3-TO-8 LINE DECODER/DEMULTIPLEXER

—TOP VIEW—

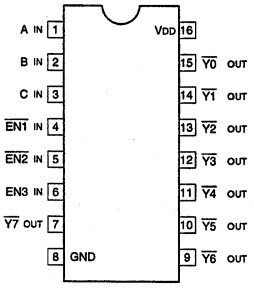

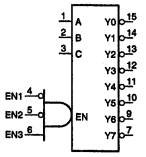

INPUTS				OUTPUTS							
EN	C	B	A	Y7	Y6	Y5	Y4	Y3	Y2	Y1	Y0
0	×	×	×	1	1	1	1	1	1	1	1
1	0	0	0	1	1	1	1	1	1	1	0
1	0	0	1	1	1	1	1	1	1	0	1
1	0	1	0	1	1	1	1	1	0	1	1
1	0	1	1	1	1	1	1	0	1	1	1
1	1	0	0	1	1	1	0	1	1	1	1
1	1	0	1	1	1	0	1	1	1	1	1
1	1	1	0	1	0	1	1	1	1	1	1
1	1	1	1	0	1	1	1	1	1	1	1

$EN = \overline{EN1} \cdot \overline{EN2} \cdot EN3$

0 : LOW LEVEL
1 : HIGH LEVEL
× : DON'T CARE

TC74VHC139FT(EL) (TOSHIBA)

C-MOS DUAL 2-TO-4 DECODER/DEMULTIPLEXER

—TOP VIEW—

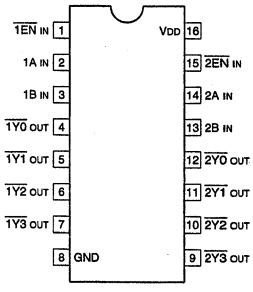

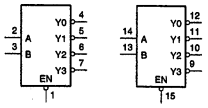

INPUTS			OUTPUTS			
EN	B	A	Y3	Y2	Y1	Y0
0	0	0	1	1	1	0
0	0	1	1	1	0	1
0	1	0	1	0	1	1
0	1	1	0	1	1	1
1	×	×	1	1	1	1

0 : LOW LEVEL
1 : HIGH LEVEL
× : DON'T CARE

TC74VHC153FT(EL) (TOSHIBA)

C-MOS DUAL 4-LINE-TO-1-LINE DATA SELECTOR/MULTIPLEXER

—TOP VIEW—

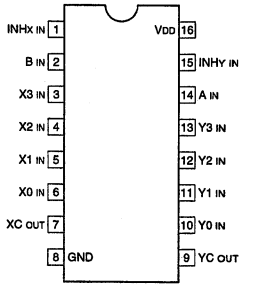

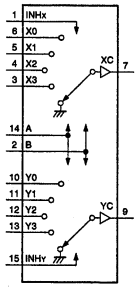

CONTROL IN			ON
INH	B	A	CHANNEL
0	0	0	0
0	0	1	1
0	1	0	2
0	1	1	3
1	×	×	GND

0 : LOW LEVEL
1 : HIGH LEVEL
× : DON'T CARE

TC74VHC157FT(EL) (TOSHIBA)

C-MOS QUAD 2-LINE-TO-1-LINE DATA SELECTOR/MULTIPLEXER

—TOP VIEW—

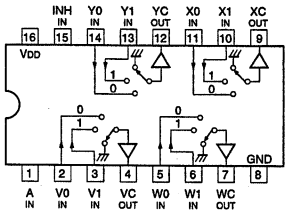

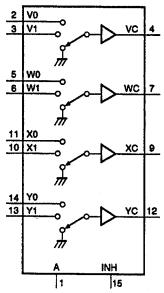

CONT. IN		ON
INH	A	CHANNEL
0	0	0
0	1	1
1	×	GND

0 : LOW LEVEL
1 : HIGH LEVEL
× : DON'T CARE

TC74VHC161FT(EL) (TOSHIBA)

C-MOS SYNCHRONOUS PRESETTABLE 4-BIT BINARY COUNTER

—TOP VIEW—

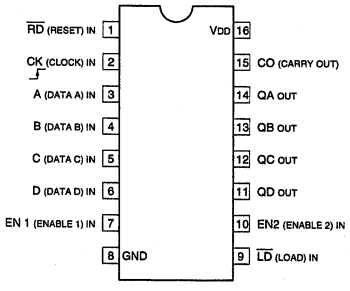

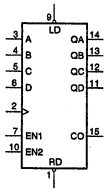

MODE SELECTION

CONTROL INPUTS				MODE
RD	LD	EN1	EN2	
0	×	×	×	RESET (ASYNCHRONOUS)
1	0	×	×	PRESET (SYNCHRONOUS)
1	1	0	×	NO COUNT
1	1	×	0	NO COUNT
1	1	1	1	COUNT

0 : LOW LEVEL
1 : HIGH LEVEL
× : DON'T CARE

COUNT SEQUENCE

COUNT	OUTPUTS			
	QD	QC	QB	QA
0	0	0	0	0
1	0	0	0	1
2	0	0	1	0
3	0	0	1	1
4	0	1	0	0
5	0	1	0	1
6	0	1	1	0
7	0	1	1	1
8	1	0	0	0
9	1	0	0	1
10	1	0	1	0
11	1	0	1	1
12	1	1	0	0
13	1	1	0	1
14	1	1	1	0
15	1	1	1	1

CARRY OUTPUT "CO"

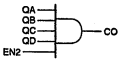

CO IS HIGH WHEN EN2 INPUT IS HIGH AND COUNT IS "15".

TC74VHC175FT(EL) (TOSHIBA)

C-MOS QUAD D-TYPE FLIP-FLOPS WITH RESET

—TOP VIEW—

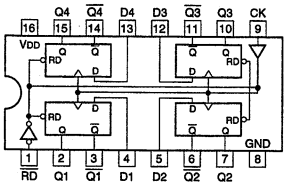

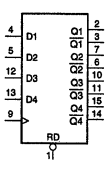

RD	CK	D	Q	$\overline{Q}$
0	×	×	0	1
1	↑	1	1	0
1	↑	0	0	1
1	0	×	Q_0	$\overline{Q}_0$

0 : LOW LEVEL
1 : HIGH LEVEL
× : DON'T CARE
Q_0 : NO CHANGE
$\overline{Q}_0$: NO CHANGE

TC74VHC163FT(EL) (TOSHIBA)

C-MOS PRESETTABLE SYNCHRONOUS 4-BIT BINARY COUNTER
—TOP VIEW—

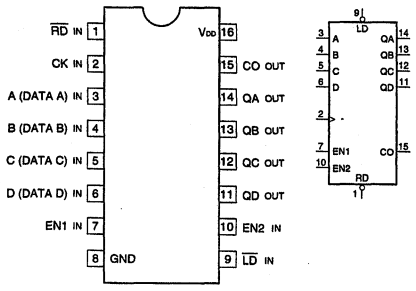

MODE SELECTION

CONTROL INPUTS				MODE
RD	LD	EN1	EN2	
0	×	×	×	RESET (SYNCHRONOUS)
1	0	×	×	PRESET (SYNCHRONOUS)
1	1	0	×	NO COUNT
1	1	×	0	NO COUNT
1	1	1	1	COUNT

CARRY OUTPUT "CO"

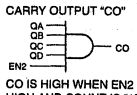

CO IS HIGH WHEN EN2 INPUT IS HIGH AND COUNT IS "15".

COUNT SEQUENCE

COUNT	OUTPUTS			
	QD	QC	QB	QA
0	0	0	0	0
1	0	0	0	1
2	0	0	1	0
3	0	0	1	1
4	0	1	0	0
5	0	1	0	1
6	0	1	1	0
7	0	1	1	1
8	1	0	0	0
9	1	0	0	1
10	1	0	1	0
11	1	0	1	1
12	1	1	0	0
13	1	1	0	1
14	1	1	1	0
15	1	1	1	1

TC74VHC240FT(EL) (TOSHIBA)

C-MOS 3-STATE INVERTER/LINE DRIVER
—TOP VIEW—

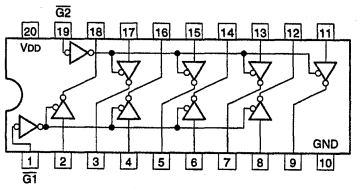

G	A	Y
0	0	1
0	1	0
1	×	HI-Z

0 : LOW LEVEL
1 : HIGH LEVEL
× : DON'T CARE
HI-Z : HIGH IMPEDANCE

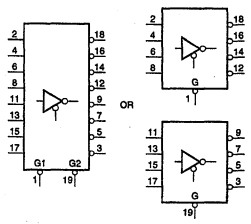

TC74VHC245FT(EL) (TOSHIBA)

OCTAL BUS TRANSCEIVER WITH 3-STATE OUTPUTS
—TOP VIEW—

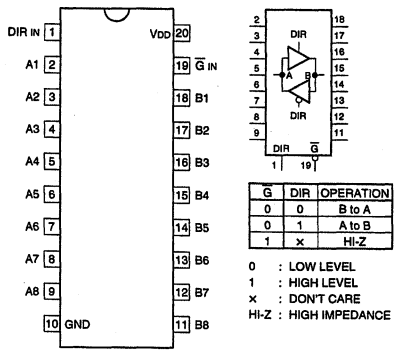

G	DIR	OPERATION
0	0	B to A
0	1	A to B
1	×	HI-Z

0 : LOW LEVEL
1 : HIGH LEVEL
× : DON'T CARE
HI-Z : HIGH IMPEDANCE

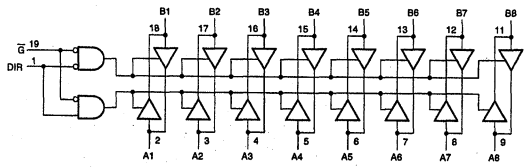

TC74VHC257FT(EL) (TOSHIBA)

C-MOS 2-LINE-TO-1-LINE DATA SELECTOR/MULTIPLEXER
—TOP VIEW—

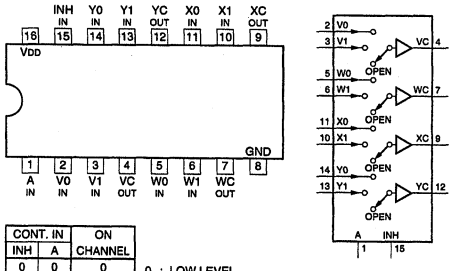

CONT. IN		ON
INH	A	CHANNEL
0	0	0
0	1	1
1	×	OPEN

0 : LOW LEVEL
1 : HIGH LEVEL
× : DON'T CARE

TC74VHC393FT(EL) (TOSHIBA)

C-MOS DUAL 4-BIT BINARY COUNTER
—TOP VIEW—

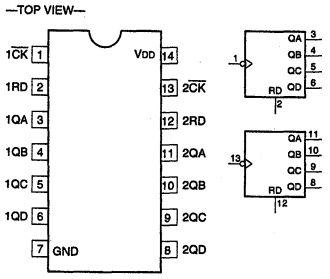

COUNT SEQUENCE

COUNT	QD	QC	QB	QA
0	0	0	0	0
1	0	0	0	1
2	0	0	1	0
3	0	0	1	1
4	0	1	0	0
5	0	1	0	1
6	0	1	1	0
7	0	1	1	1
8	1	0	0	0
9	1	0	0	1
10	1	0	1	0
11	1	0	1	1
12	1	1	0	0
13	1	1	0	1
14	1	1	1	0
15	1	1	1	1

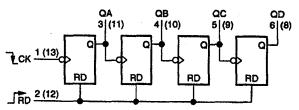

RESET/COUNT FUNCTION

RD	QD	QC	QB	QA
1	0	0	0	0
0	COUNT			

0 : LOW LEVEL
1 : HIGH LEVEL

TC74VHC299FT(EL) (TOSHIBA)

C-MOS 8-BIT PIPO SHIFT REGISTER WITH ASYNCHRONOUS CLEAR

—TOP VIEW—

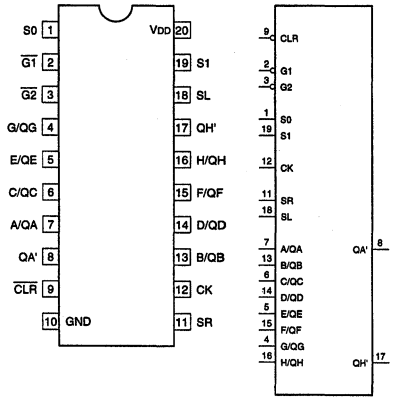

MODE	INPUTS								INPUTS/OUTPUTS								OUTPUTS	
			FUNCTION		OUTPUT CONTROL		SHIFT		A/	B/	C/	D/	E/	F/	G/	H/		
	CLR	CK	S1	S0	G1	G2	SL	SR	QA	QB	QC	QD	QE	QF	QG	QH	QA	QH
HI-Z	0	×	1	1	×	×	×	×	HI-Z								0	0
CLEAR	0	×	0	×	0	0	×	×	0	0	0	0	0	0	0	0	0	0
	0	×	×	0	0	0	×	×	0	0	0	0	0	0	0	0	0	0
HOLD	1	×	0	0	0	0	×	×	QAo	QBo	QCo	QDo	QEo	QFo	QGo	QHo	QAo	QHo
SHIFT RIGHT	1	↑	0	1	0	0	×	1	1	QAn	QBn	QCn	QDn	QEn	QFn	QGn	1	QGn
	1	↑	0	1	0	0	×	0	0	QAn	QBn	QCn	QDn	QEn	QFn	QGn	0	QGn
SHIFT LEFT	1	↑	1	0	0	0	1	×	QBn	QCn	QDn	QEn	QFn	QGn	QHn	1	QBn	1
	1	↑	1	0	0	0	0	×	QBn	QCn	QDn	QEn	QFn	QGn	QHn	0	QBn	0
LOAD	1	↑	1	1	×	×	×	×	a	b	c	d	e	f	g	h	a	h

a---h = The level of the steady-state input at inputs A through H respectively.
0 ; LOW LEVEL
1 ; HIGH LEVEL
× ; DON'T CARE
HI-Z ; HIGH IMPEDANCE

TC74VHC4040FT(EL) (TOSHIBA)

C-MOS 12-STAGE RIPPLE CARRY BINARY COUNTER/DRIVER

—TOP VIEW—

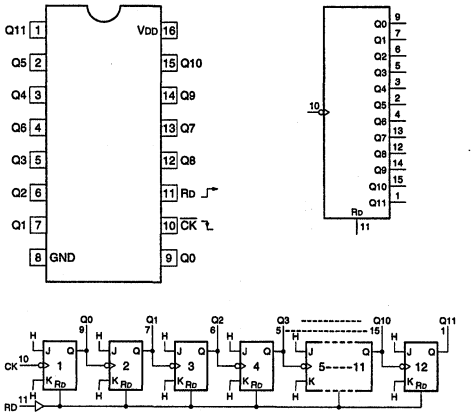

COUNT	Q11	Q10	Q9	Q8	Q7	Q6	Q5	Q4	Q3	Q2	Q1	Q0
0	0	0	0	0	0	0	0	0	0	0	0	0
1	0	0	0	0	0	0	0	0	0	0	0	1
2	0	0	0	0	0	0	0	0	0	0	1	0
3	0	0	0	0	0	0	0	0	0	0	1	1
4095	1	1	1	1	1	1	1	1	1	1	1	1

RD	Q11-------Q0
1	ALL LOW
0	COUNT

0 : LOW LEVEL
1 : HIGH LEVEL

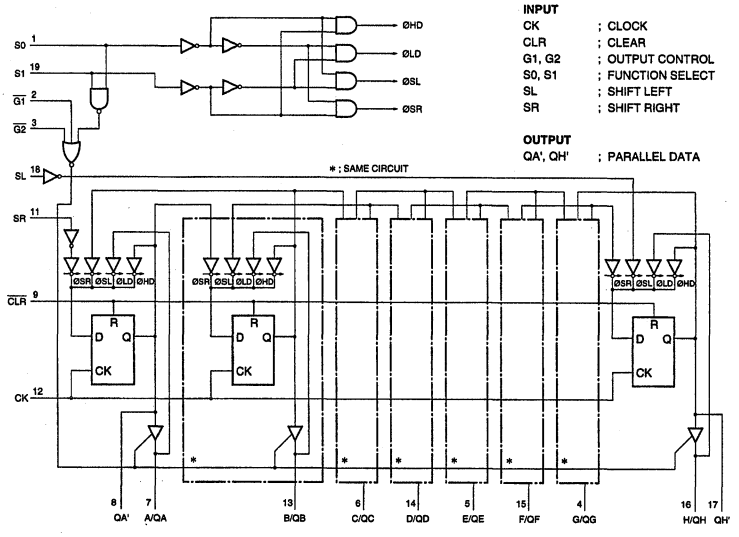

INPUT/OUTPUT
A/QA - H/QH ; 8 BIT PARALLEL DATA

INPUT
CK ; CLOCK
CLR ; CLEAR
G1, G2 ; OUTPUT CONTROL
S0, S1 ; FUNCTION SELECT
SL ; SHIFT LEFT
SR ; SHIFT RIGHT

OUTPUT
QA', QH' ; PARALLEL DATA

TC74VHC573FT(EL) (TOSHIBA)

C-MOS 3-STATE OUTPUTS OCTAL LATCHES
—TOP VIEW—

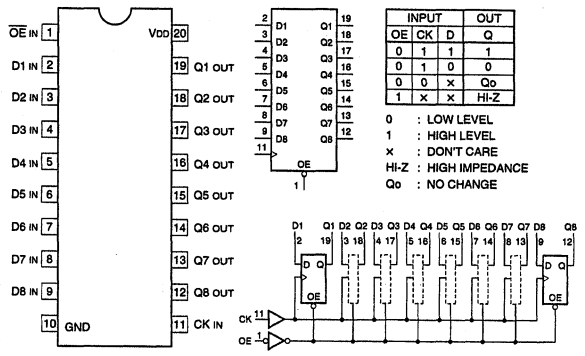

INPUT			OUT
OE	CK	D	Q
0	1	1	1
0	1	0	0
0	0	×	Qo
1	×	×	HI-Z

0 : LOW LEVEL
1 : HIGH LEVEL
× : DON'T CARE
HI-Z : HIGH IMPEDANCE
Qo : NO CHANGE

TC74VHC74FT(EL) (TOSHIBA)

C-MOS DUAL D-TYPE FLIP-FLOPS WITH DIRECT SET/RESET
—TOP VIEW—

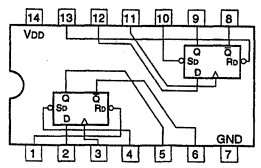

INPUTS				OUTPUTS	
$\overline{Sd}$	$\overline{Rd}$	CK	D	Qn+1	$\overline{Qn+1}$
0	1	×	×	1	0
1	0	×	×	0	1
0	0	×	×	1	1
1	1	↑	1	1	0
1	1	↑	0	0	1
1	1	0	×	Qn	$\overline{Qn}$

0 : LOW LEVEL
1 : HIGH LEVEL
× : DON'T CARE

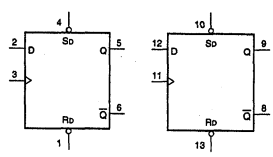

TC74VHC595FT(EL) (TOSHIBA)

C-MOS 8-BIT SERIAL-INPUT/SERIAL- OR PARALLEL-OUTPUT
SHIFT REGISTER WITH LATCHED 3-STATE OUTPUT
—TOP VIEW—

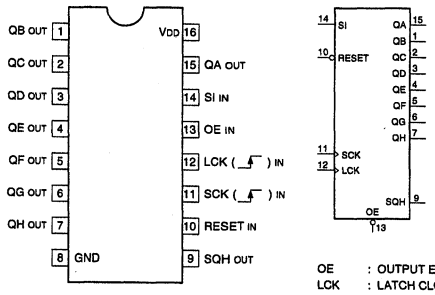

OE : OUTPUT ENABLE INPUT
LCK : LATCH CLOCK INPUT
SCK : SHIFT CLOCK INPUT
RESET : SHIFT-REGISTER RESET INPUT
SI : SERIAL N
QA - QH : PARALLEL OUTPUT
SQH : SERIAL OUT

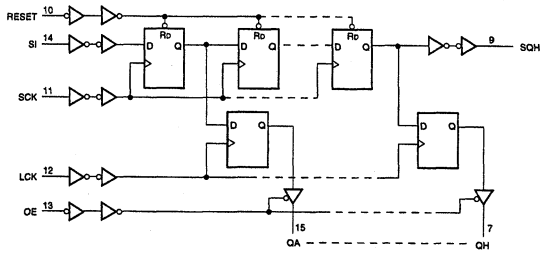

TC7S14F (TOSHIBA)
TC7S14F(TE85R)
TC7S14FU(TE85R) (TOSHIBA)

C-MOS SCHMITT INVERTER
—TOP VIEW—

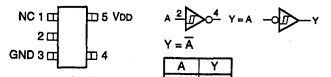

A	Y
0	1
1	0

0 : LOW LEVEL
1 : HIGH LEVEL

TC7S32FU(TE85R) (TOSHIBA)
TC7SH32FU-TE85R (TOSHIBA)

C-MOS 2-INPUT OR GATE
—TOP VIEW—

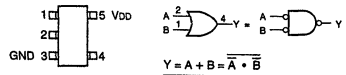

A	B	Y
0	0	0
0	1	1
1	0	1
1	1	1

0 : LOW LEVEL
1 : HIGH LEVEL

TC7W00FU (TOSHIBA)
TC7W00FU(TE12R)

C-MOS DUAL 2-INPUT NAND GATE
—TOP VIEW—

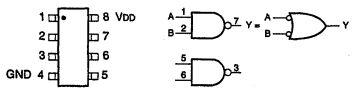

A	B	Y
0	0	1
0	1	1
1	0	1
1	1	0

0 : LOW LEVEL
1 : HIGH LEVEL

TC7S00FU(TE85R) (TOSHIBA)
TC7SH00FU-TE85R (TOSHIBA)

C-MOS 2-INPUT NAND GATE
—TOP VIEW—

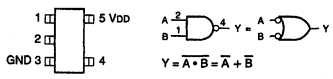

A	B	Y
0	0	1
0	1	1
1	0	1
1	1	0

0 : LOW LEVEL
1 : HIGH LEVEL

TC7W02F (TOSHIBA)
TC7W02FU(TE12R)

C-MOS DUAL 2-INPUT NOR GATE
—TOP VIEW—

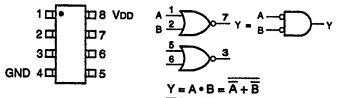

$Y = A \cdot B = \overline{\overline{A} + \overline{B}}$

A	B	Y
0	0	1
0	1	0
1	0	0
1	1	0

0 : LOW LEVEL
1 : HIGH LEVEL

TC7W04FU (TOSHIBA)
TC7W04FU(TE12R)
TC7WH04FU(TE12R) (TOSHIBA)
TC7WU04FU(TE12R) (TOSHIBA)

TRIPLE INVERTERS
—TOP VIEW—

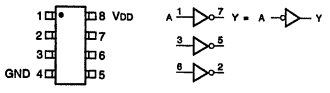

$Y = \overline{A}$

A	Y
0	1
1	0

0 : LOW LEVEL
1 : HIGH LEVEL

TC7W08FU (TOSHIBA)
TC7W08FU(TE12R)

C-MOS 2-INPUT AND GATE
—TOP VIEW—

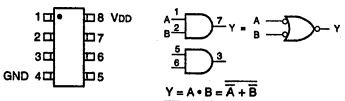

$Y = A \cdot B = \overline{\overline{A} + \overline{B}}$

A	B	Y
0	0	0
0	1	0
1	0	0
1	1	1

0 : LOW LEVEL
1 : HIGH LEVEL

TC7W14FU(TE12R) (TOSHIBA)

C-MOS SCHMITT INVERTER
—TOP VIEW—

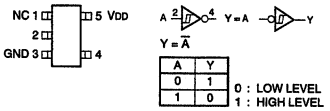

$Y = \overline{A}$

A	Y
0	1
1	0

0 : LOW LEVEL
1 : HIGH LEVEL

TC7W32FU (TOSHIBA)
TC7W32FU(TE12R)

C-MOS DUAL 2-INPUT OR GATE
—TOP VIEW—

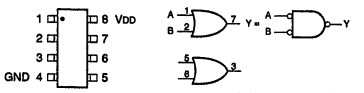

$Y = A + B = \overline{\overline{A} \cdot \overline{B}}$

A	B	Y
0	0	0
0	1	1
1	0	1
1	1	1

0 : LOW LEVEL
1 : HIGH LEVEL

TC7W74FU (TOSHIBA)
TC7W74FU(TE12R)
TC7WH74FU(TR12R) (TOSHIBA)

C-MOS D-TYPE FLIP-FLOPS WITH PRESET AND CLEAR
—TOP VIEW—

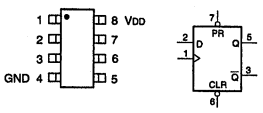

INPUTS				OUTPUTS		FUNCTION
CLR	PR	CK	D	Qn+1	$\overline{Qn+1}$	
0	1	X	X	0	1	CLEAR
1	0	X	X	1	0	PRESET
0	0	X	X	1	1	–
1	1	↓	0	0	1	–
1	1	↓	1	1	0	–
1	1	↑	X	Qn	$\overline{Qn}$	NO CHANGE

0 : LOW LEVEL
1 : HIGH LEVEL
× : DON'T CARE

TC7WH125FU(TE12R) (TOSHIBA)

C-MOS DUAL BUS BUFFER
—TOP VIEW—

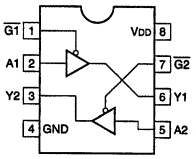

INPUTS		OUTPUT
G	A	Y
H	X	Z
L	L	L
L	H	H

X : DON'T CARE
Z : HI-IMPEDANCE

TC7WH157FU(TE12R) (TOSHIBA)

2-CHANNEL MULTIPLEXER
—TOP VIEW—

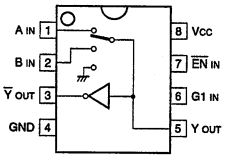

INPUTS				OUTPUTS	
EN	G1	A	B	Y	$\overline{Y}$
1	X	X	X	0	1
0	0	0	X	0	1
0	0	1	X	1	0
0	1	X	0	0	1
0	1	X	1	1	0

0 : LOW LEVEL
1 : HIGH LEVEL
× : DON'T CARE

TE7751 (TKE)

C-MOS SUPER I/O EXPANDER (8-BIT × 9 CH)
—TOP VIEW—

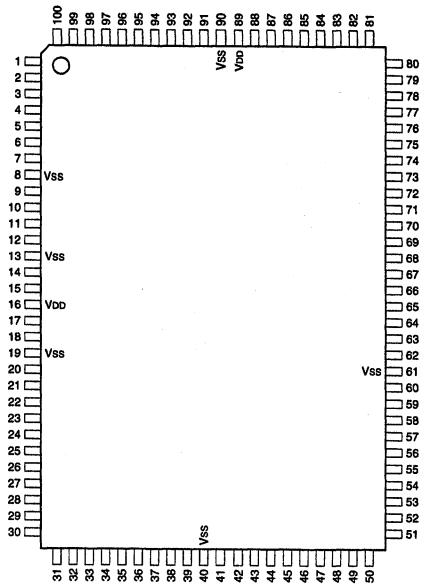

PIN No.	I/O	SIGNAL	PIN No.	I/O	SIGNAL	PIN No.	I/O	SIGNAL	PIN No.	I/O	SIGNAL
1	I/O	P81	26	I/O	P16	51	I/O	P46	76	I/O	P52
2	I/O	P82	27	I/O	P17	52	I/O	P47	77	I/O	P53
3	I/O	P83	28	I/O	P20	53	I/O	D0	78	I/O	P54
4	I/O	P84	29	I/O	P21	54	I/O	D1	79	I/O	P55
5	I/O	P85	30	I/O	P22	55	I/O	D2	80	I/O	P56
6	I/O	P86	31	I/O	P23	56	I/O	D3	81	I/O	P57
7	I/O	P87	32	I/O	P24	57	I/O	D4	82	I/O	P60
8	—	Vss	33	I/O	P25	58	I/O	D5	83	I/O	P61
9	I/O	P90	34	I/O	P26	59	I/O	D6	84	I/O	P62
10	I/O	P91	35	I/O	P27	60	I/O	D7	85	I/O	P63
11	I/O	P92	36	I/O	P30	61	—	Vss	86	I/O	P64
12	I/O	P93	37	I/O	P31	62	I	$\overline{RESET}$	87	I/O	P65
13	—	Vss	38	I/O	P32	63	I	$\overline{CS}$	88	I/O	P66
14	I/O	P94	39	I/O	P33	64	I	$\overline{RD/RW}$	89	—	VDD
15	I/O	P95	40	—	Vss	65	I	$\overline{WR/MEN}$	90	—	Vss
16	—	VDD	41	I/O	P34	66	I	A0	91	I/O	P67
17	I/O	P96	42	I/O	P35	67	I	A1	92	I/O	P70
18	I/O	P97	43	I/O	P36	68	I	A2	93	I/O	P71
19	—	Vss	44	I/O	P37	69	I	A3	94	I/O	P72
20	I/O	P10	45	I/O	P40	70	I	IOS0	95	I/O	P73
21	I/O	P11	46	I/O	P41	71	I	IOS1	96	I/O	P74
22	I/O	P12	47	I/O	P42	72	I	IOS2	97	I/O	P75
23	I/O	P13	48	I/O	P43	73	I	MS	98	I/O	P76
24	I/O	P14	49	I/O	P44	74	I/O	P50	99	I/O	P77
25	I/O	P15	50	I/O	P45	75	I/O	P51	100	I/O	P80

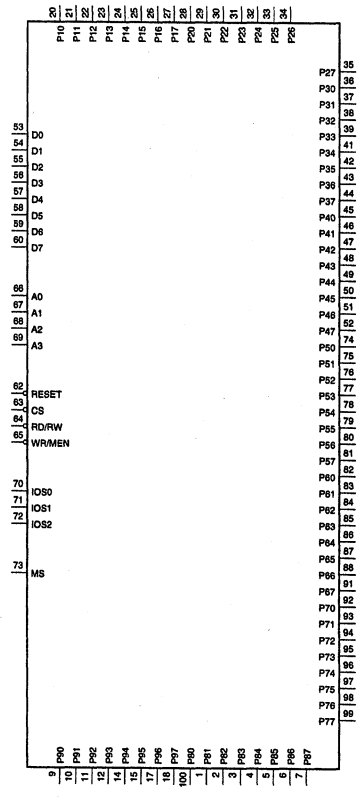

INPUT

A0 - A3	; ADDRESS INPUT
CS	; CHIP SELECT
IOS0 - 2	; I/O SELECT
MS	; MODE SELECT
$\overline{RD/RW}$	; READ/WRITE
$\overline{RESET}$	; RESET
$\overline{WR/MEN}$	; WRITE/MOTOROLA ENABLE

INPUT/OUTPUT

D0 - 7	; DATA BUS
P10 - 17	; I/O PORT 1
P20 - 27	; I/O PORT 2
P30 - 37	; I/O PORT 3
P40 - 47	; I/O PORT 4
P50 - 57	; I/O PORT 5
P60 - 67	; I/O PORT 6
P70 - 77	; I/O PORT 7
P80 - 87	; I/O PORT 8
P90 - 97	; I/O PORT 9

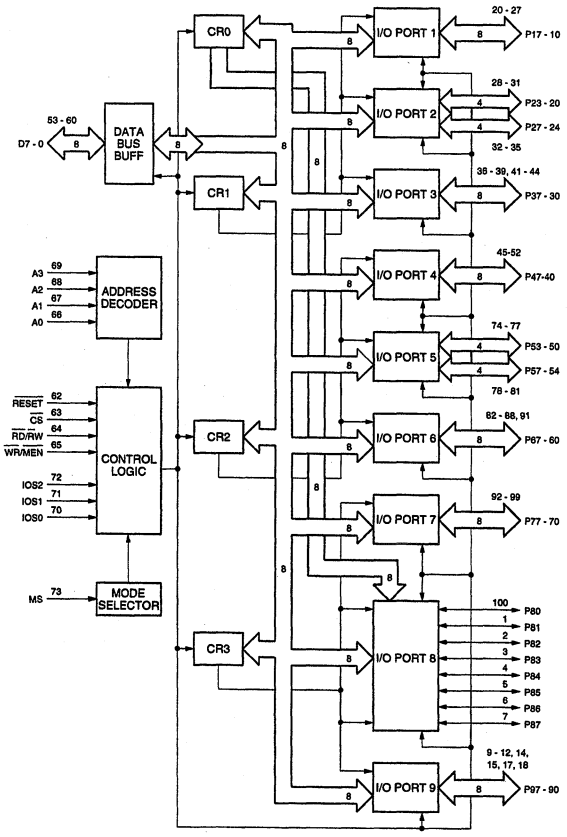

TC7WH241FU(TE12R) (TOSHIBA)

DUAL BUS BUFFER
—TOP VIEW—

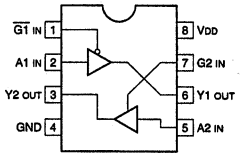

INPUT			OUTPUT
G	G	A	Y
L	H	L	L
L	H	H	H
H	L	×	Z

× : DON'T CARE
Z : HI-IMPEDANCE

TL054CDB-E05 (TI)

DUAL OPERATIONAL AMPLIFLER
—TOP VIEW—

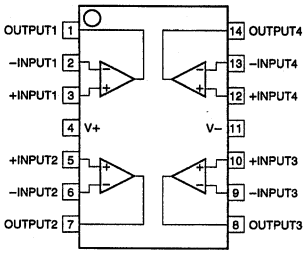

TL064CPW (TI)
TL064CPW-E05
TL084CPW-E05
TL084CPW-E20 (TI)

OPERATIONAL AMPLIFIER
(J FET INPUT)
—TOP VIEW—

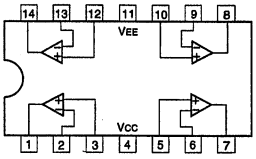

TL074CPW (TI)
TL074CPW-E05

OPERATIONAL AMPLIFIER
(LOW-NOISE, JFET-INPUT)
—TOP VIEW—

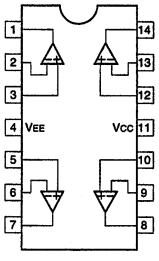

TL1451ACPW-E05 (TI)

DUAL PWM POWER CONTROLLER
—TOP VIEW—

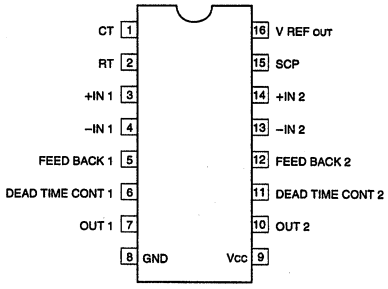

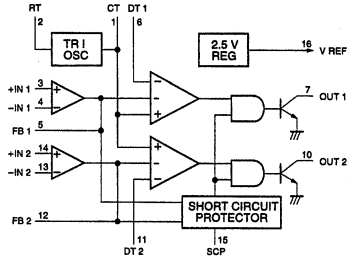

TL5001CD (TI)
TL5001CDR

SWITCHING REGULATOR CONTROLLER
—TOP VIEW—

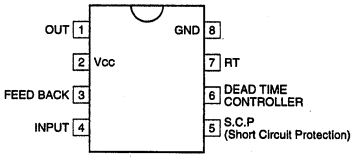

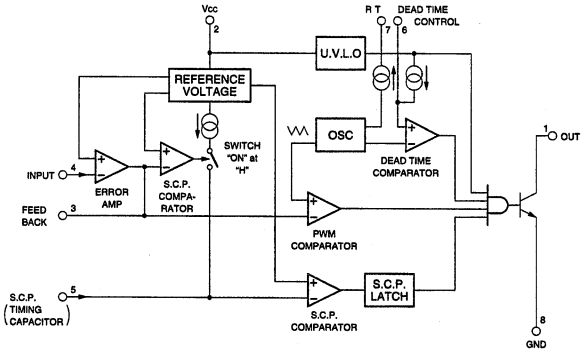

TLC2272CPW-E05 (TI)

C-MOS DUAL OPERATIONAL AMPLIFIERS
(DUAL-SUPPLY TYPE)
—TOP VIEW—

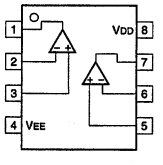

TYPE	VDD	VEE
ICL7621	+1 to +8 V	–1 to –8 V
TLC2262 TLC2272	+2.2 to +8 V	–2.2 to –8 V

TLC272CPS (TI)
TLC272CPS-E05
TLC272CPW-E05 (TI)

C-MOS DUAL OPERATIONAL AMPLIFIERS
(SINGLE-SUPPLY TYPE)
—TOP VIEW—

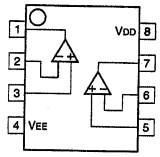

TLC274CPW (TI)
TLC274CPW-E05

C-MOS OPERATIONAL AMPLIFIER
—TOP VIEW—

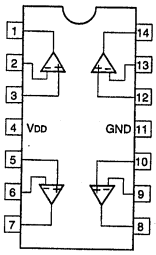

TLV2221CDBV (TI)

SINGLE OPERATIONAL AMPLIFIER
—TOP VIEW—

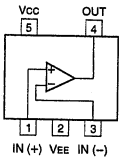

TSC426C0A (TELEDYNE)
TSC426C0A-T2

C-MOS HIGH SPEED DUAL DRIVER
—TOP VIEW—

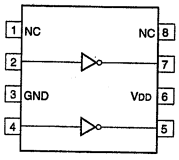

TLC2932IPW (TI)
TLC2932IPW-E05

C-MOS VCO AND PHASE FREQUENCY DETECTOR
—TOP VIEW—

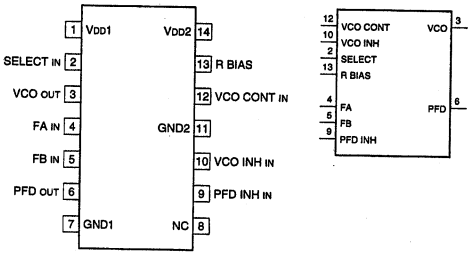

INPUT

FA	: REFERENCE FREQUENCY
FB	: INPUT FREQUENCY FROM OUTSIDE COUNTER
PFD INH	: PFD INHIBIT
SELECT	: VCO OUTPUT FREQUENCY SELECT
VCO CONT	: VCO CONTROL VOLTAGE
VCO INH	: VCO INHIBIT

OUTPUT

PFD	: PHASE FREQUENCY DETECTOR
VCO	: VOLTAGE CONTROLLED OSCILLATOR

OTHER

R BIAS	: BIAS RESISTOR FOR VCO OSCILLATION FREQUENCY SETTING

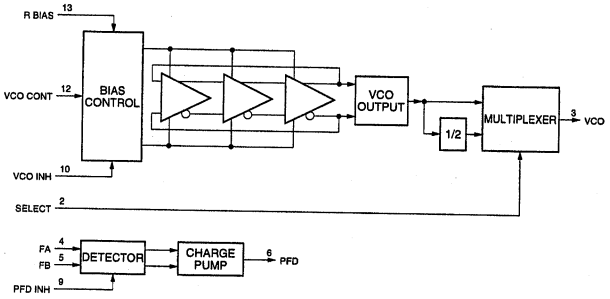

UPC1663G (NEC)
UPC1663G-E2

WIDEBAND VIDEO AMPLIFIER
—TOP VIEW—

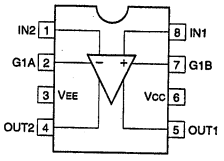

TMS4C2973-26DTR (TI)

C-MOS 2.9 M (245,760-WORD × 12) BITS FIELD MEMORY
—TOP VIEW—

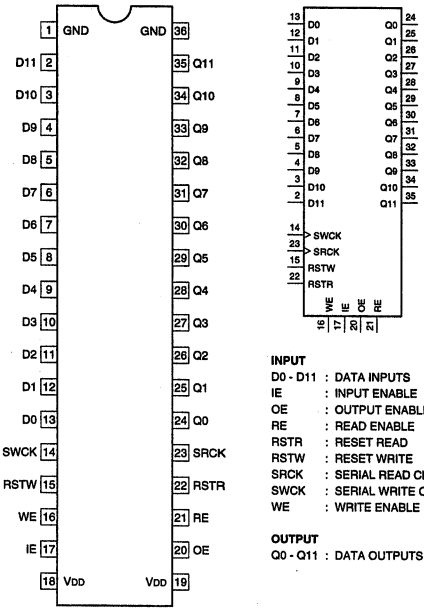

INPUT
D0 - D11 : DATA INPUTS
IE : INPUT ENABLE
OE : OUTPUT ENABLE
RE : READ ENABLE
RSTR : RESET READ
RSTW : RESET WRITE
SRCK : SERIAL READ CLOCK
SWCK : SERIAL WRITE CLOCK
WE : WRITE ENABLE

OUTPUT
Q0 - Q11 : DATA OUTPUTS

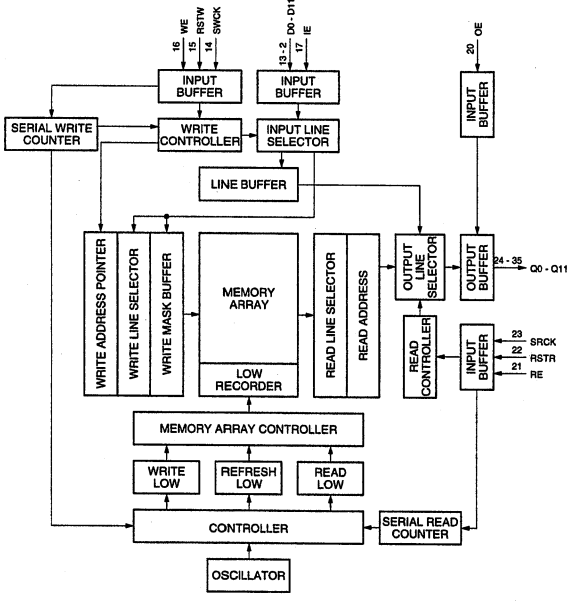

NOTE :
TMS4C2972 AND TMS4C2973 ALLOW BLOCK RANDOM ACCESS.

UPC311G2 (NEC)
UPC311G2-E2

VOLTAGE COMPARATOR
—TOP VIEW—

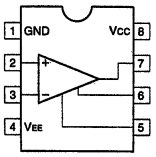

UPD16502GS(1) (NEC)
UPD16502GS(1)-E2

C-MOS CCD DRIVER
—TOP VIEW—

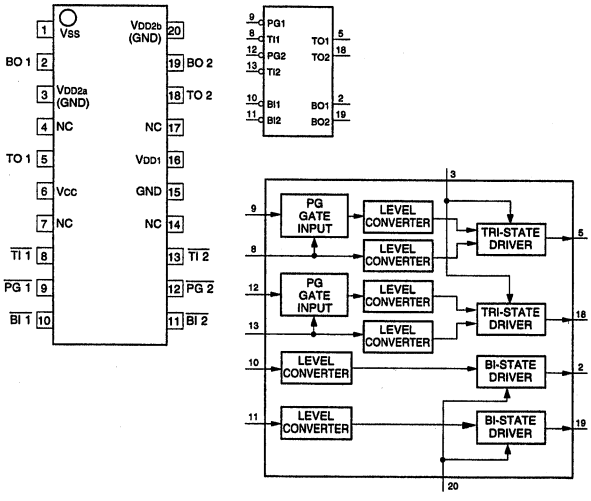

UPD434008ALLE-A20 (NEC)

4M (524,288 × 8)-BIT SRAM
—TOP VIEW—

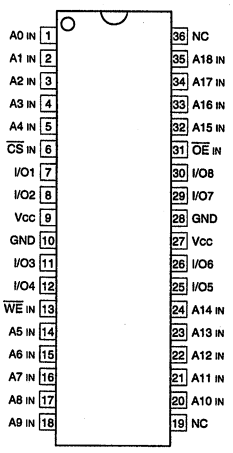

INPUTS
A0 - A18 : ADDRESS
CS : CHIP SELECT
OE : OUTPUT ENABLE
WE : WRITE ENABLE

INPUTS/OUTPUTS
I/O1 - I/O8 : DATA

OTHER
NC : NO CONNECTION

OPERATION MODE

CS	OE	WE	MODE	I/O1 - I/O8
1	×	×	UNSELECT	HI-Z
0	1	1	OUTPUT DISABLE	HI-Z
0	0	1	READ	DATA OUT
0	×	0	WRITE	DATA IN

0 : LOW LEVEL
1 : HIGH LEVEL
× : DON'T CARE
HI-Z : HIGH IMPEDANCE

UPD42280GU-30 (NEC)

C-MOS 2 M (256 × 8)-BIT FIELD BUFFER
—TOP VIEW—

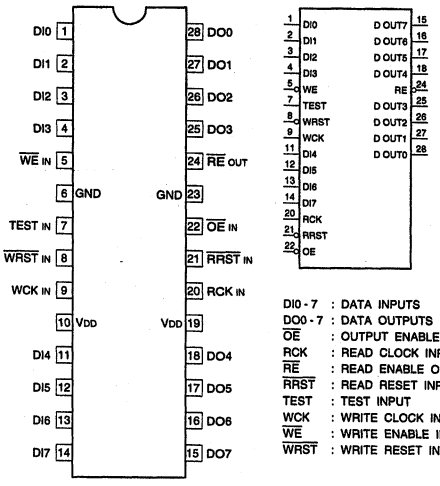

DI0 - 7 : DATA INPUTS
DO0 - 7 : DATA OUTPUTS
$\overline{OE}$: OUTPUT ENABLE INPUT
RCK : READ CLOCK INPUT
$\overline{RE}$: READ ENABLE OUTPUT
$\overline{RRST}$: READ RESET INPUT
TEST : TEST INPUT
WCK : WRITE CLOCK INPUT
$\overline{WE}$: WRITE ENABLE INPUT
$\overline{WRST}$: WRITE RESET INPUT

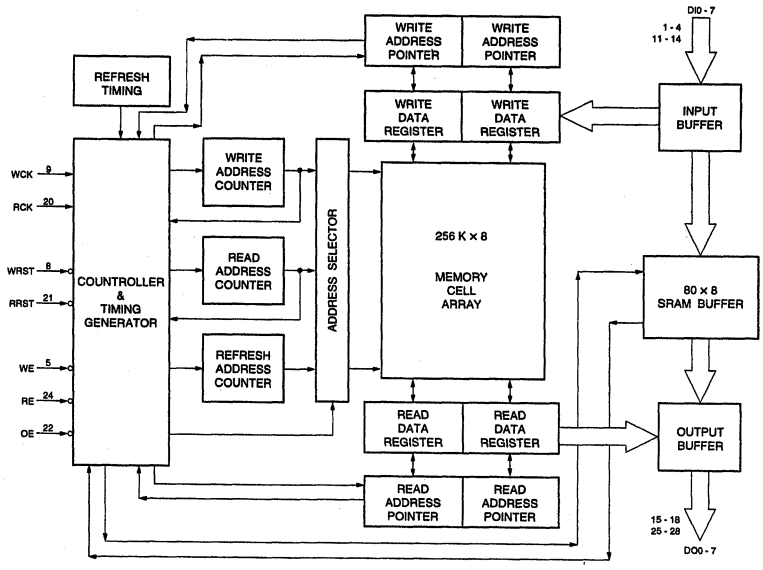

UPD4991AGS (NEC)
UPD4991AGS-E2

4-BIT PARALLEL I/O FOR CALENDAR/CLOCK
—TOP VIEW—

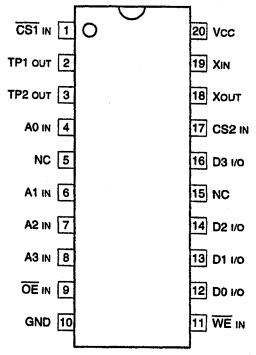

INPUTS
A0 - A3 : ADDRESS
$\overline{CS1}$, CS2 : CHIP SELECT
$\overline{OE}$: READ ENABLE
$\overline{WE}$: WRITE ENABLE
XIN : CRYSTAL SIGNAL

OUTPUTS
TP1, TP2 : TIMING PULSE

INPUTS/OUTPUTS
D0 - D3 : DATA
XOUT : CRYSTAL SIGNAL

OTHER
NC : NO CONNECTION

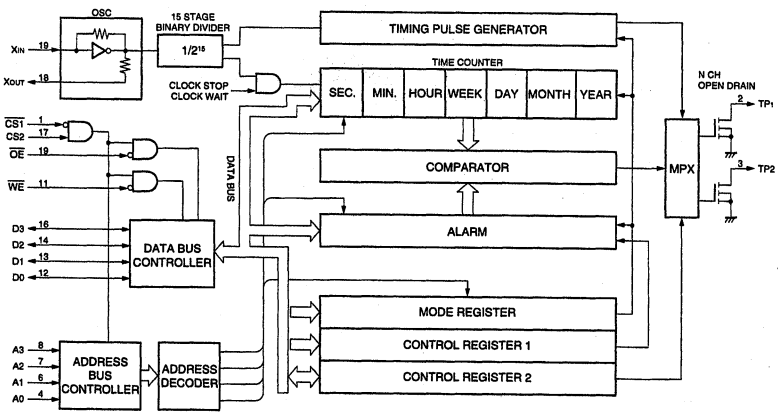

UPD6456GS-620-E2 (NEC)

C-MOS ON SCREEN CHARACTER DISPLAY

—TOP VIEW—

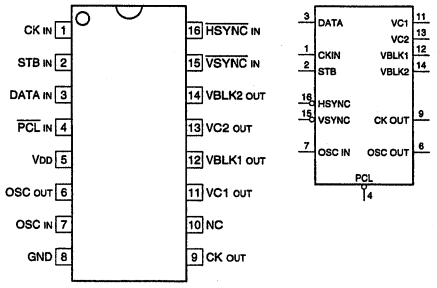

INPUT

CK IN	; CLOCK FOR DATA READ
DATA	; SERIAL DATA
HSYNC	; HORIZONTAL SYNC
OSC IN	; OSCILLATOR FOR DOT CLOCK GENERATOR
PCL	; POWER ON CLEAR
STB	; STROBE
VSYNC	; VERTICAL SYNC

OUTPUT

CK OUT	; CLOCK FOR CHECK
OSC OUT	; OSCILLATOR FOR DOT CLOCK GENERATOR
VBLK1	; VIDEO BLANKING 1
VBLK2	; VIDEO BLANKING 2
VC1	; CHARACTER SIGNAL 1
VC2	; CHARACTER SIGNAL 2

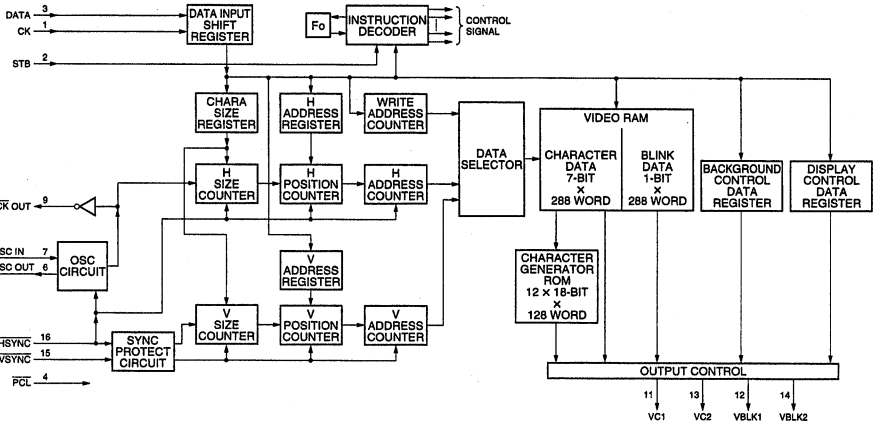

UPD4702G (NEC)

C-MOS INCREMENTAL ENCODER 8-BIT UPDOWN COUNTER

—TOP VIEW—

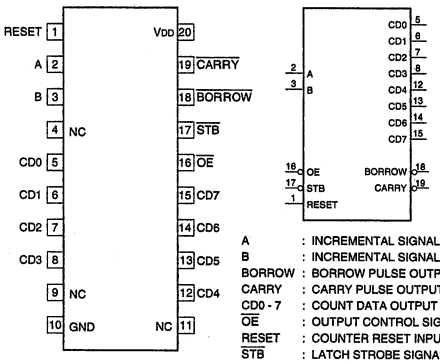

A	: INCREMENTAL SIGNAL (PHASE A) INPUT
B	: INCREMENTAL SIGNAL (PHASE B) INPUT
BORROW	: BORROW PULSE OUTPUT
CARRY	: CARRY PULSE OUTPUT
CD0 - 7	: COUNT DATA OUTPUT
OE	: OUTPUT CONTROL SIGNAL INPUT
RESET	: COUNTER RESET INPUT
STB	: LATCH STROBE SIGNAL INPUT

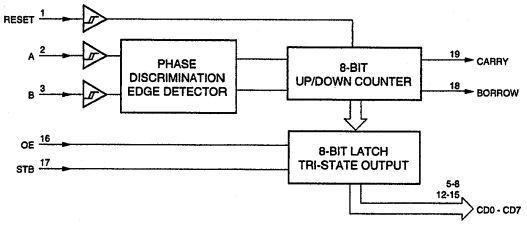

UPD6466GS-515 (NEC)

C-MOS ON-SCREEN CHARACTER DISPLAY
—TOP VIEW—

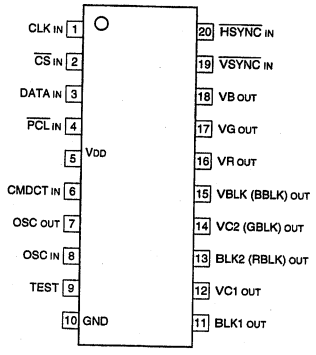

INPUT

CLK	: CLOCK
$\overline{CS}$	: CHIP SELECT
CMDCT	: COMMAND SELECT
DATA	: SERIAL DATA
$\overline{HSYNC}$	: HORIZONTAL SYNC
OSC	: OSCILLATOR
$\overline{PCL}$	: POWER ON CLEAR
$\overline{VSYNC}$	: VERTICAL SYNC

OUTPUT

BLK1, BLK2	: BLANKING 1, 2
BBLK	: BLANKING B
OSC	: OSCILLATOR
GBLK	: BLANKING G
RBLK	: BLANKING R
VBLK	: BLANKING
VC1, VC2	: CHARACTER 1, 2
VR, VG, VB	: CHARACTER R, G, B

OTHER

TEST	: TEST

* IN ( ) ARE SET BY SETTING WITH INITIAL CONDITION SETTING COMMAND.

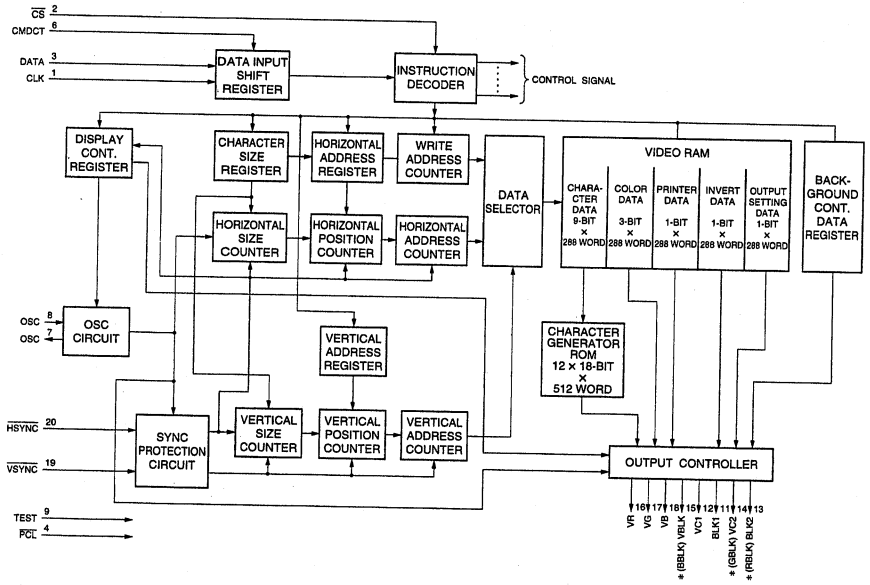

UPD71055GB-10-3B4 (NEC)

C-MOS PARALLEL INTERFACE UNIT
—TOP VIEW—

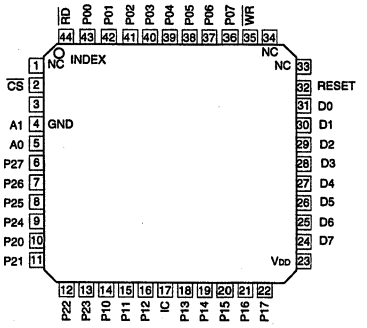

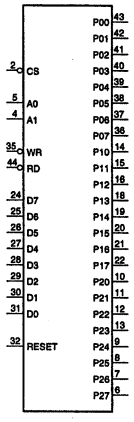

A1, A0 ; ADDRESS
CS ; CHIP SELECT
D7 - D0 ; DATA BUS
P07 - P00 ; PORT 0

P17 - P10 ; PORT 1
P27 - P20 ; PORT 2
RD ; READ STROBE
WR ; WRITE STROBE

IC ; INTERNALLY CONNECTED

CS	RD	WR	A1	A0	OPERATION	CPU ACTION
0	0	1	0	0	PORT0 → DATA • BUS	INPUT
0	0	1	0	1	PORT1 → DATA • BUS	INPUT
0	0	1	1	0	PORT2 → DATA • BUS	INPUT
0	0	1	1	1	DISABLE	
0	0	0	X	X		
0	1	0	0	0	DATA • BUS → PORT0	OUTPUT
0	1	0	0	1	DATA • BUS → PORT1	OUTPUT
0	1	0	1	0	DATA • BUS → PORT2	OUTPUT
0	1	0	1	1	DATA • BUS → COMMAND REGISTER	OUTPUT
0	1	1	X	X	HIGH IMPEDANCE	
1	X	X	X	X		

0 : LOW LEVEL
1 : HIGH LEVEL
X : DON'T CARE

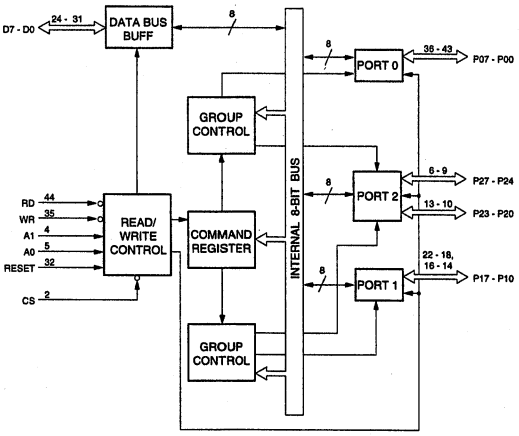

WS57C256F-55C-(A) (WAFERSCALE)

C-MOS 256K (32K × 8)-BIT EPROM
—TOP VIEW—

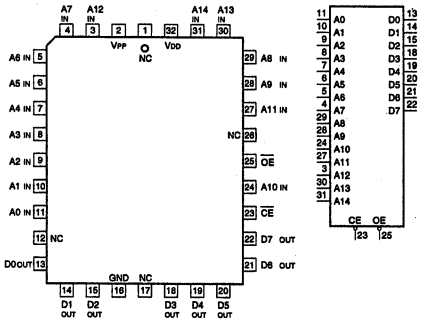

A0 - A14 ; ADDRESS INPUT
CE ; CHIP ENABLE INPUT
D0 - D7 ; DATA OUTPUT
OE ; OUTPUT ENABLE INPUT
VPP ; PROGRAM POWER SUPPLY

An	CE	OE	VPP	Dn	FUNCTION
An	0	0	+5V	D out	READ
An	0	1	+5V	HI-Z	OUTPUT DISABLE
X	1	X	+5V	HI-Z	STANDBY

0 ; LOW LEVEL
1 ; HIGH LEVEL
X ; DON'T CARE
HI-Z ; HIGH IMPEDANCE

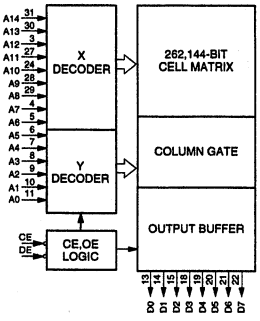

X24164SIT1 (XICOR)(16K-BIT)

C-MOS SERIAL EEPROM
—TOP VIEW—

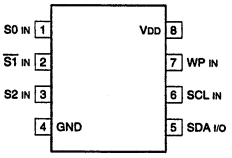

INPUT
S0, S1, S2 : DEVICE SELECT
SCL : SERIAL CLOCK
WP : WRITE PROTECT

INPUT/OUTPUT
SDA : SERIAL DATA

X24645S8T2 (XICOR)

C-MOS SERIAL EEPROM
—TOP VIEW—

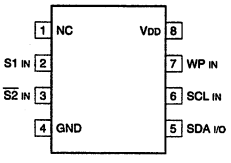

INPUT
S1, S2 : DEVICE SELECT
SCL : SERIAL CLOCK
WP : WRITE PROTECT

INPUT/OUTPUT
SDA : SERIAL DATA

UPD72002GB-11-3B4 (NEC)

C-MOS MULTI-PROTOCOL SERIAL CONTROLLER
—TOP VIEW—

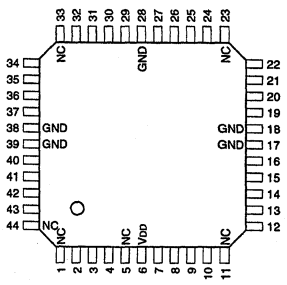

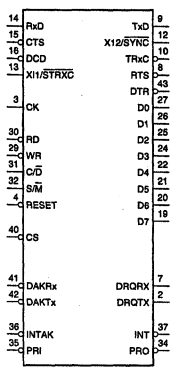

PIN No.	I/O	SIGNAL	PIN No.	I/O	SIGNAL
1	—	NC	23	—	NC
2	O	$\overline{DRQTx}$	24	I/O	D3
3	I	CLK	25	I/O	D2
4	I	$\overline{RESET}$	26	I/O	D1
5	—	NC	27	I/O	D0
6	—	V_{DD}	28	—	GND
7	O	$\overline{DRQRx}$	29	I	$\overline{WR}$
8	O	$\overline{RTS}$	30	I	$\overline{RD}$
9	O	TxD	31	I	C/$\overline{D}$
10	I	$\overline{TRxC}$	32	I	S/$\overline{M}$
11	—	NC	33	—	NC
12	I/O	XI2/$\overline{SYNC}$	34	O	$\overline{PRO}$
13	I	XI1/$\overline{STRxC}$	35	I	$\overline{PRI}$
14	I	RxD	36	I	$\overline{INTAK}$
15	I	$\overline{CTS}$	37	O	$\overline{INT}$
16	I	$\overline{DCD}$	38	—	GND
17	—	GND	39	—	GND
18	—	GND	40	I	$\overline{CS}$
19	I/O	D7	41	I	$\overline{DAKRx}$
20	I/O	D6	42	I	$\overline{DAKTx}$
21	I/O	D5	43	O	$\overline{DTR}$
22	I/O	D4	44	—	NC

INPUT

C/$\overline{D}$	; CONTROL/DATA SELECT
CK	; SYSTEM CLOCK
CS	; CHIP SELECT
CTS	; CLEAR TO SEND
DAKRX	; DMA ACKNOWLEDGE RX
DAKTX	; DMA ACKNOWLEDGE TX
DCD	; DATA CARRIER DETECT
INTAK	; INTERRUPT ACKNOWLEDGE
PRI	; PRIORITY
RD	; READ ENABLE
RESET	; RESET
RxD	; RECEIVE DATA
S/$\overline{M}$	; REGISTER SUB/MAIN SELECT
WR	; WRITE ENABLE
XT1/STRXC	; CRYSTAL INPUT 1/SOURCE OF TRANSMIT RECEIVE CLOCK

OUTPUT

DRQRX	; DMA REQUEST RX
DRQTX	; DMA REQUEST TX
DTR	; DATA TERMINAL READY
INT	; INTERRUPT
PRO	; PRIORITY
RTS	; REQUEST TO SEND
TxD	; TRANSMIT DATA

INPUT/OUTPUT

D0 - D7	; DATA BUS
TRxC	; TRANSMIT RECEIVE CLOCK
XT2/$\overline{SYNC}$	; CRYSTAL INPUT 2/SYNCHRONIZATION

IINPUTS					FUNCTION
CS	WR	RD	S/$\overline{M}$	C/$\overline{D}$	
0	0	1	0	0	TRANSMIT DATA WRITE TO Tx BUFFER
0	1	0	0	0	RECEIVED DATA READ FROM Rx BUFFER
0	0	1	0	1	DATA WRITE TO CONTROL MAIN REGISTER
			1		DATA WRITE TO CONTROL SUB REGISTER
0	1	0	0	1	DATA READ FROM STATUS MAIN REGISTER
			1		DATA READ FROM STATUS SUB REGISTER
0	1	1	X	X	HIGH-IMPEDANCE
0	0	0	X	X	INHIBIT

0 ; LOW LEVEL
1 ; HIGH LEVEL
X ; DON'T CARE

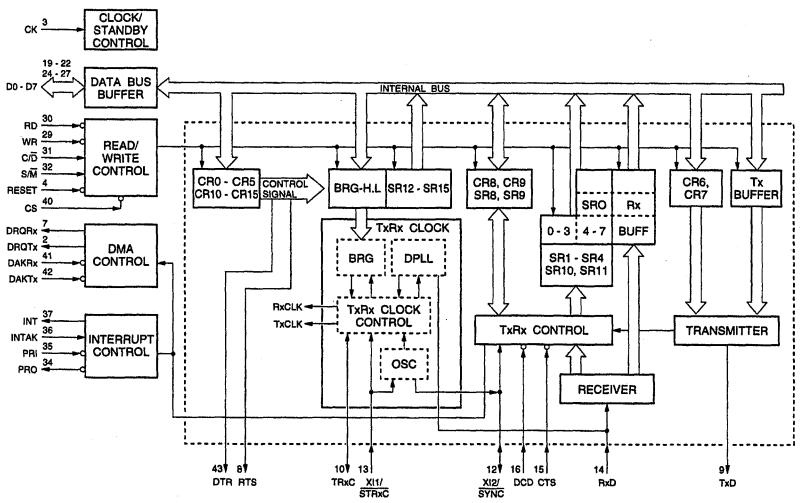

X24C02S-T1 (XICOR)(2K-BIT)

C-MOS SERIAL EEPROM
—TOP VIEW—

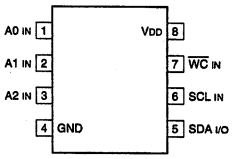

INPUT
A0 - A2 : ADDRESS
SCL : SERIAL CLOCK
$\overline{WC}$: WRITE CONTROL

INPUT/OUTPUT
SDA : SERIAL DATA

NOTE :

TYPE	PIN 7
NM24C16	NC
X24C02	$\overline{WC}$
X24C04	TEST

X24C16SI (XICOR)
X24C16SI-C7000

C-MOS 16,384 (2,048 × 8)-BIT SERIAL EEPROM
—TOP VIEW—

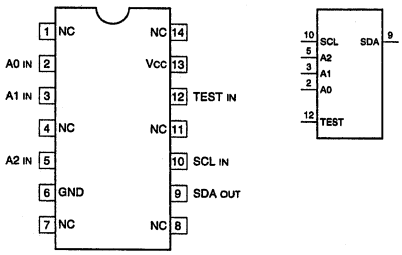

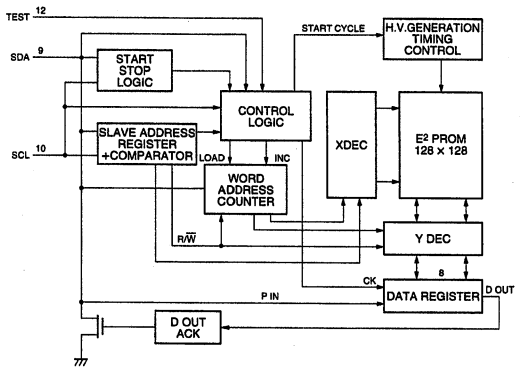

XRD7523AID-JTR (EXAR)

C-MOS 8-BIT D/A CONVERTER
—TOP VIEW—

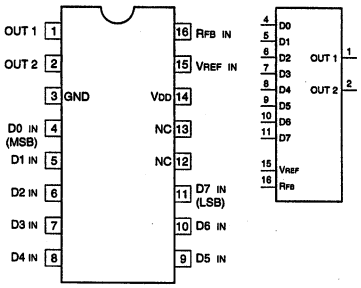

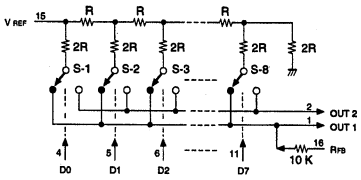

MP7523 : R = 10 K
XRD7523 : R = 20 K

Circuit Functions

System	Board	Function	Page
CCD BLOCK	BI-96	CCD Imager (R, G, B)	3-4
	CN-1183	Connector for BI-96	3-7
	DR-387	CCD Driver	3-7
	PA-228	Pre-amp (Sample & Hold)	3-4
	TG-206*1/TG-207*2	Timing Generator	3-6
	VA-191	Video Amp	3-5
CAMERA/VIDEO	AD-155	A/D Converter	3-8
	BF-74	Connector for DCP-17	3-8
	CN-1573*1	Connector for DCP-17	3-8
	RC-69*2+RC-75*2	Rate (16:9 to 4:3) Converter	3-8
	DCP-17	Camera Processor	3-8, 9
	DVP-14	Digital Bit Reduction Decoder, Digital Encoder, Digital Decoder, Timing Clock Generator	3-13
	DVP-17	RF, Digital Audio Processor, System Controller for VTR Block	3-13
	ES-23	Composite Encoder	3-9
	TC-101	Analog Audio Processor, Time Code Generator	3-12, 14, 15
HEAD/SERVO	CTL-10	CTL/Erase Head Amp	3-10
	CUE-2	CUE Head Amp	3-14
	HN-260	Harness, Head Amp (REC Head PB)	3-15
	SV-210	Servo Controller	3-10
MICROPHONE	IF-716	Lens Control, Mic Amp	3-12
	MA-94	Camera Mic Pre-amp	3-12
	SW-971	Mic Level, Auto White/Black SW, VTR Start/Stop SW, Shutter On/Off Select SW	3-12
POWER SUPPLY	DC-101	Battery DC Filter	–
	PS-533	Power Supply (Light)	3-10
	RE-160	Regulator	3-10
	RE-161	Regulator, Switching Control	3-10
CONNECTOR BOX	AXM-21	Connector (AUDIO IN/OUT), Audio Pre-amp	3-12, 14
	CNB-11	Circuit Breaker	3-10
	DC-106	External DC Filter	3-10
	IO-178	Connector (GEN LOCK IN, TEST OUT, TC IN, TC OUT)	3-15
	LP-111	Rear Tally	3-10
	RM-180	Connector (RM)	3-10
	VSE-32	GENLOCK IN Filter	–
OTHERS	CI-20	Connector (40-pin)	3-3
	CI-21	40-pin Adaptor Interface	3-3
	CP-329	Switch Panel	3-15
	HP-93	Earphone	3-14
	KY-293	Function Key	3-15
	LP-109	Back Tally, Back Tally Switch	3-10
	MB-810	Motherboard	–
	MB-811	Motherboard	–
	SE-275	Sensor	–
	SW-972	Turbo Gain Switch	3-15
	SW-973	Menu and Light Auto/Manual Switch	–
	SW-983	Rotary Encoder Switch	3-3
	VR-248	Memory Card, Audio Select Switch, Alarm Level, Monitor Level	3-14, 15
OPTION	FM-65*3 (BKDW-704)	Image Inverter Board	3-3
	DIF-75 (BKDW-702)	SDI Output Board	3-3
	MY-93 (BKDW-703)	Picture Cache Board	3-10

*1 : For DVW-707/707P only
*2 : For DVW-790WS/790WSP/709WS/709WSP only
*3 : Dedicated optional board for DVW-790WS/790WSP/709WS/709WSP.

3-2

SONY-SP1386 / DRUCK 2

Section 3
Block Diagrams

Block Diagram Index

	Page
A. AD-155	3-8
AXM-21/21B	3-12, 14
B. BC-31	3-4, 7
BC-32	3-4, 7
BF-74	3-8
BI-96	3-4
C. CAMERA BLOCK Overall	3-3
CN-1183	3-7
CN-1573	3-8
CP-329	3-15
CUE-2	3-14
D. DCP-17	3-8, 9
DR-387	3-7
DVP-14	3-13
DVP-17	3-13
E. ES-23/23P	3-9
H. HN-260	3-15
HP-93	3-14
I. IF-716	3-12
IO-178	3-15
K. KY-293	3-15
M. MA-94	3-12
P. PA-228	3-4
R. RC-69	3-8
RC-75	3-8
S. SW-971	3-12
SW-972	3-15
T. TC-101	3-12, 14, 15
TG-206/206P	3-6
TG-207/207P	3-6
V. VTR BLOCK Overall	3-10, 11
VA-191	3-5
VR-248	3-14, 15

AXM-21/21B (2/2), CUE-2, HP-93, TC-101 (2/3), VR-248 (1/2) Block Diagram

AUDIO OUTPUT

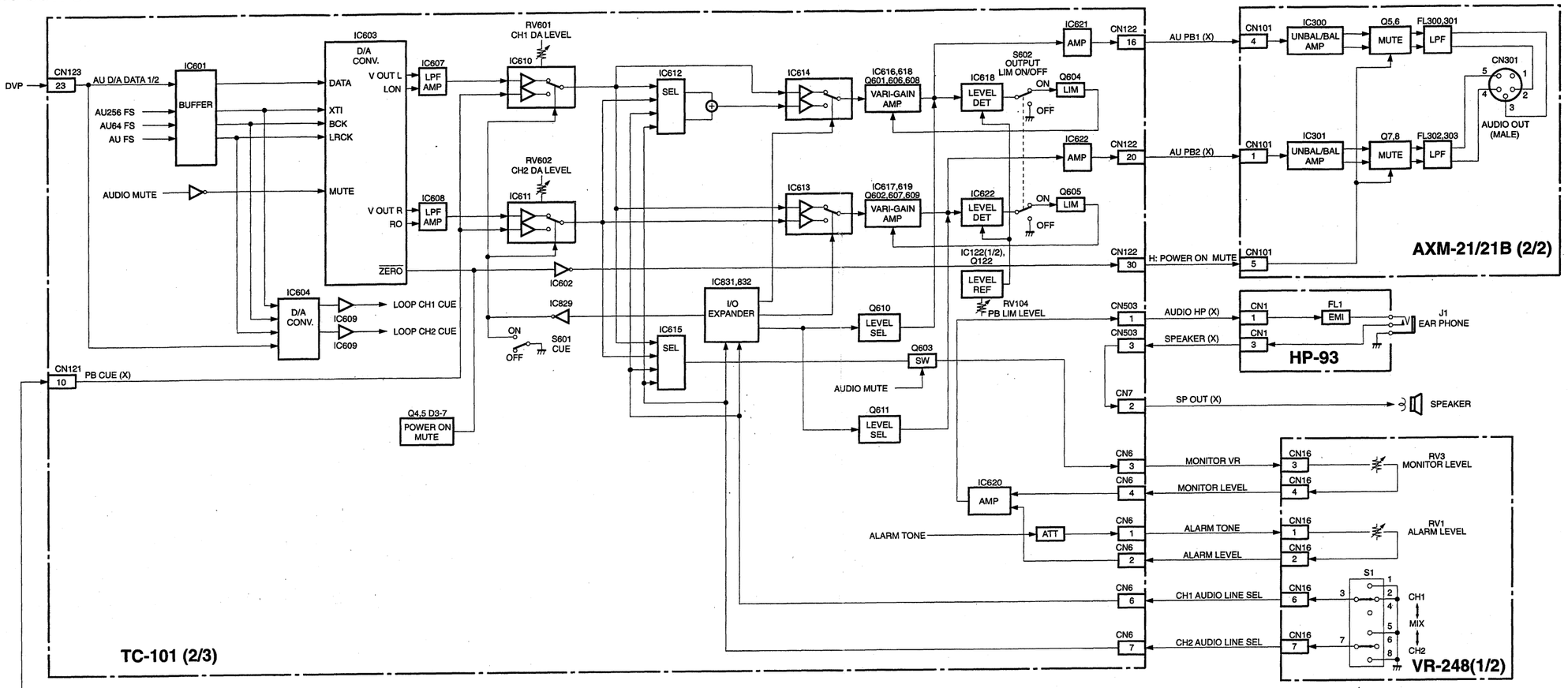

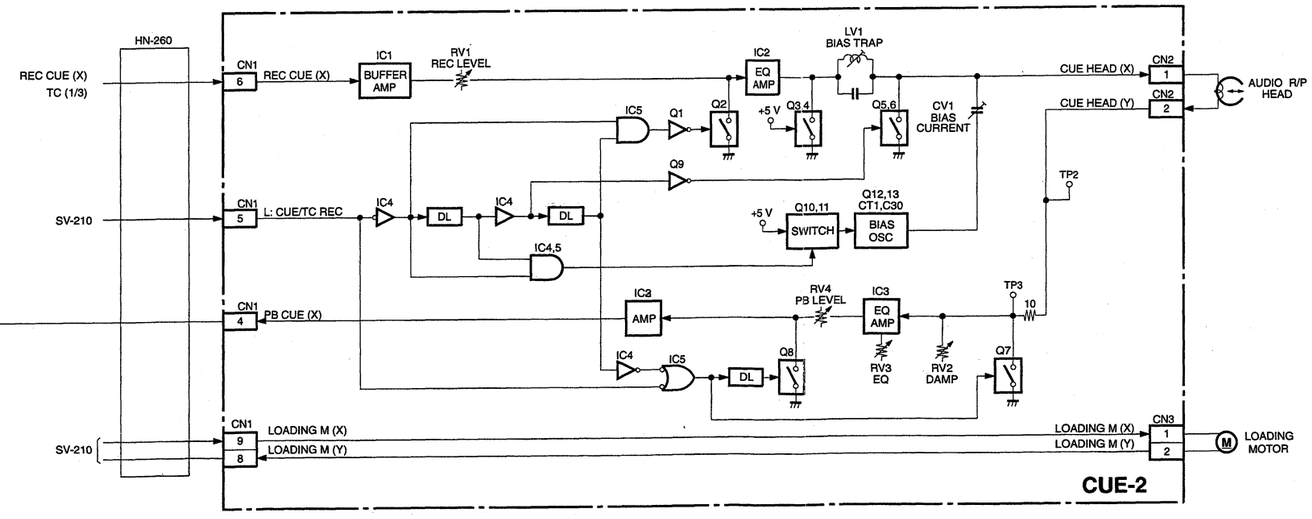

VTR BLOCK (3/4)

3-14

AUDIO PROCESSOR

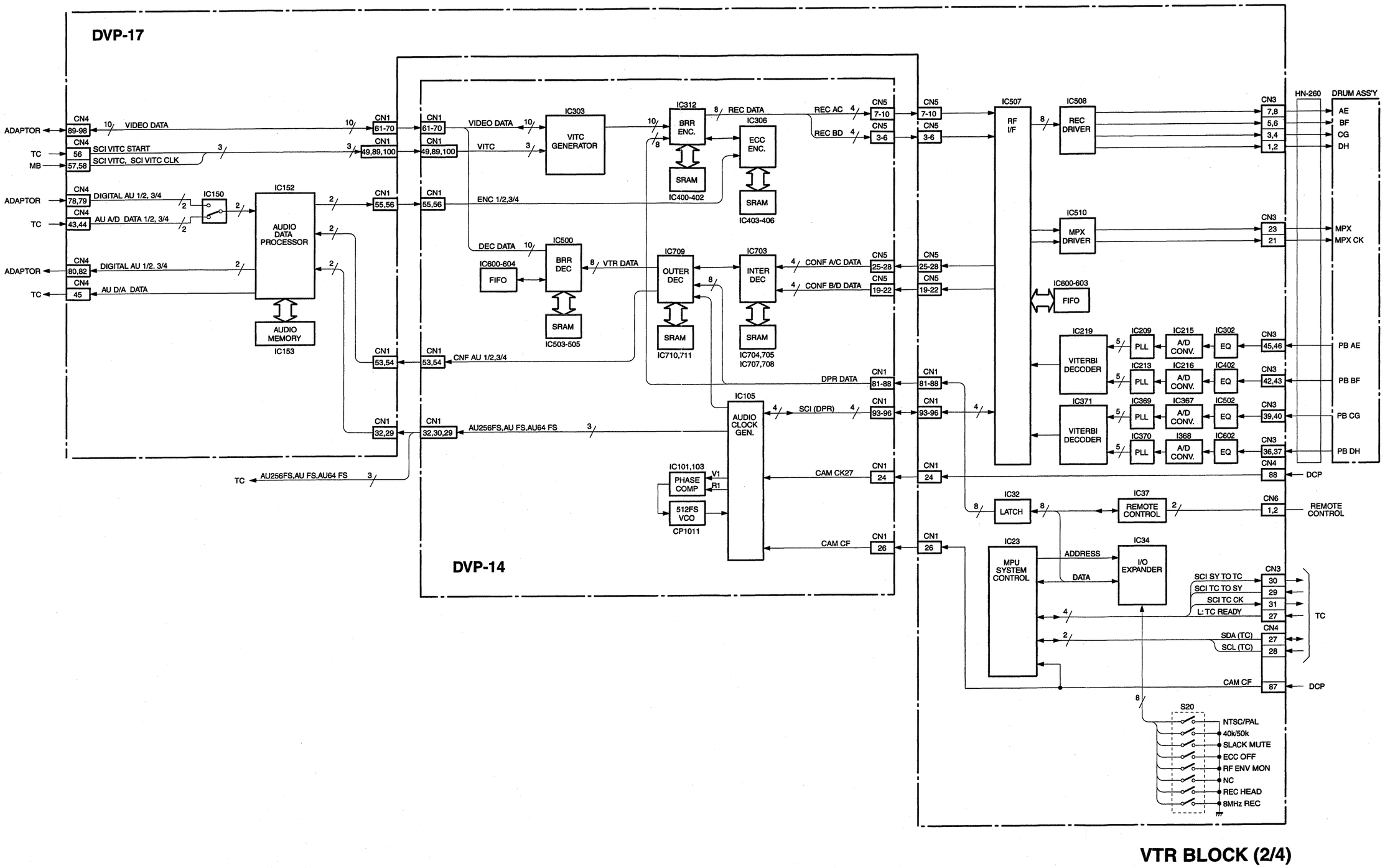

AXM-21/21B (1/2), IF-716, MA-94, SW-971, TC-101 (1/3) Block Diagram

ANALOG AUDIO PROCESSOR

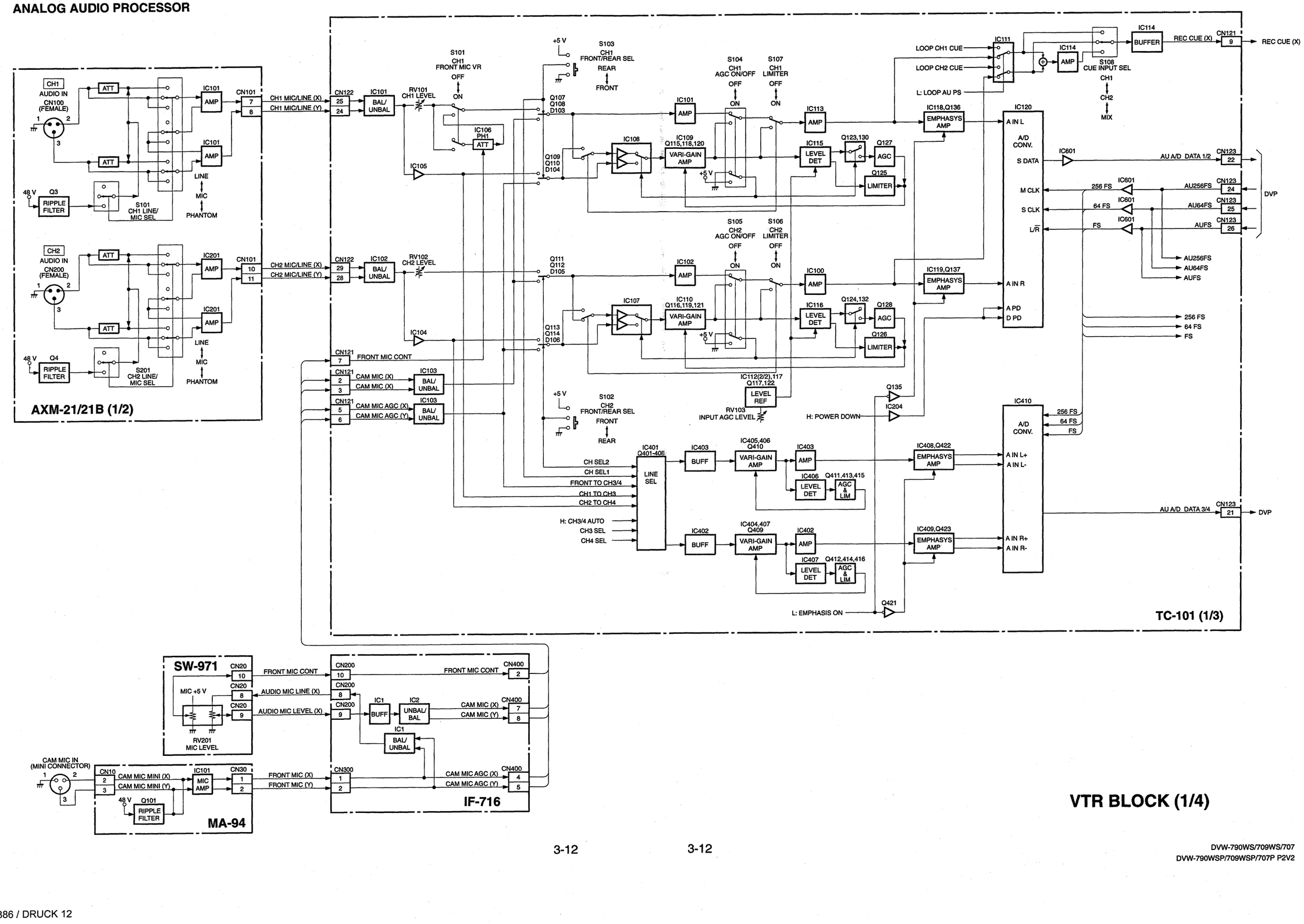

VTR BLOCK (1/4)

VTR BLOCK Overall (2/2) Block Diagram

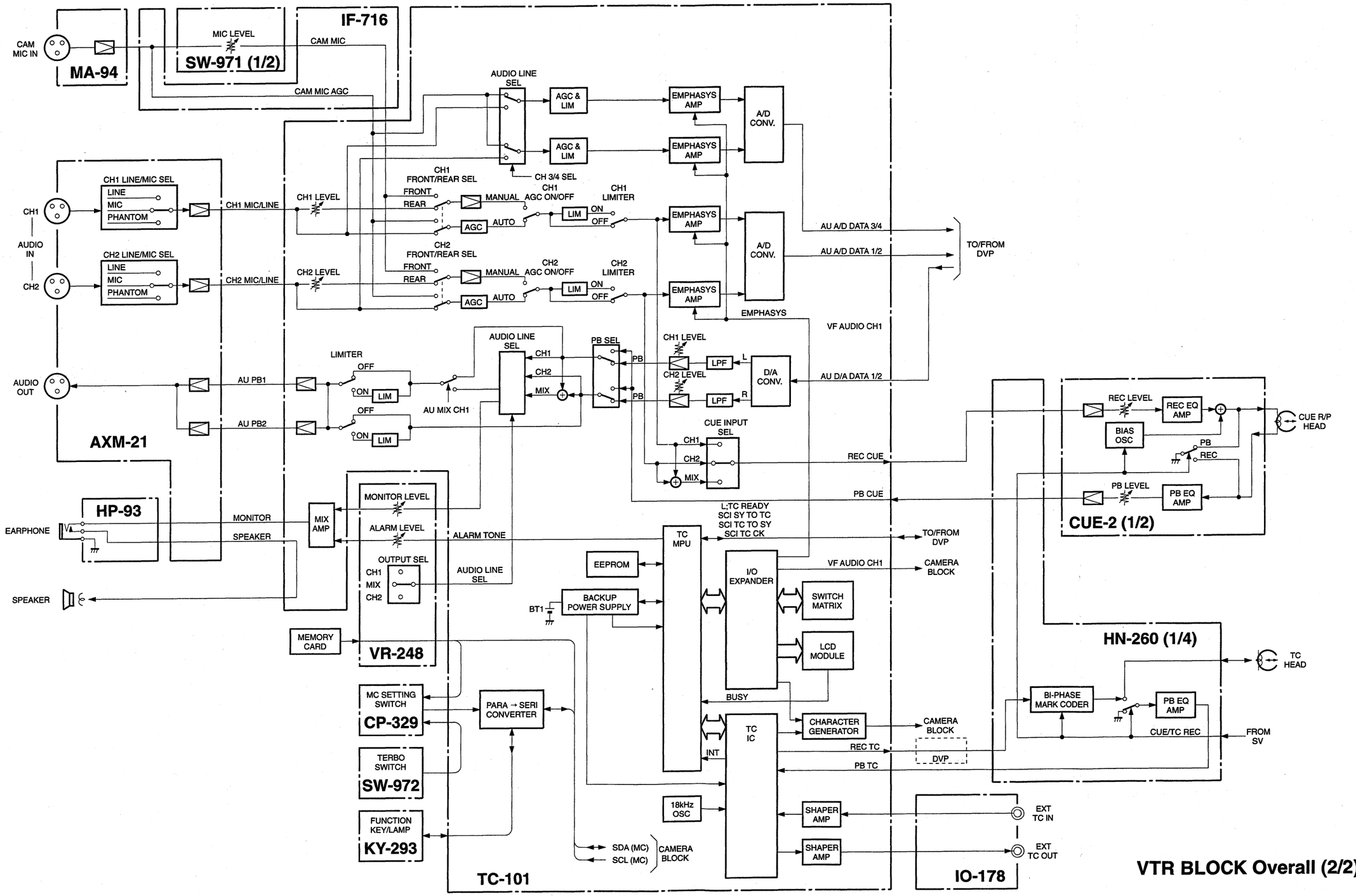

VTR BLOCK Overall (1/2) Block Diagram

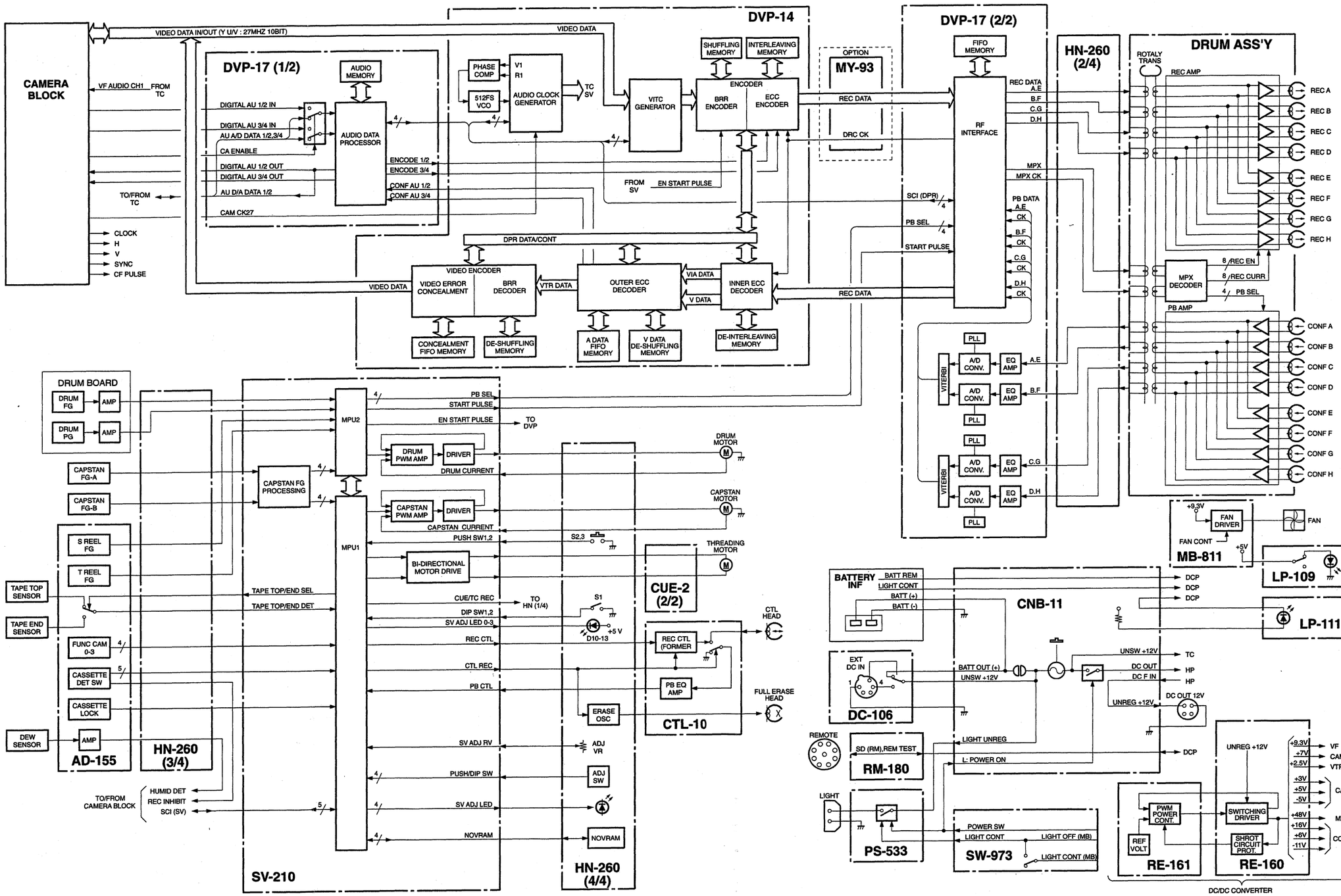

VTR BLOCK Overall (1/2)

3-10

DCP-17 (2/2), ES-23/23P Block Diagram

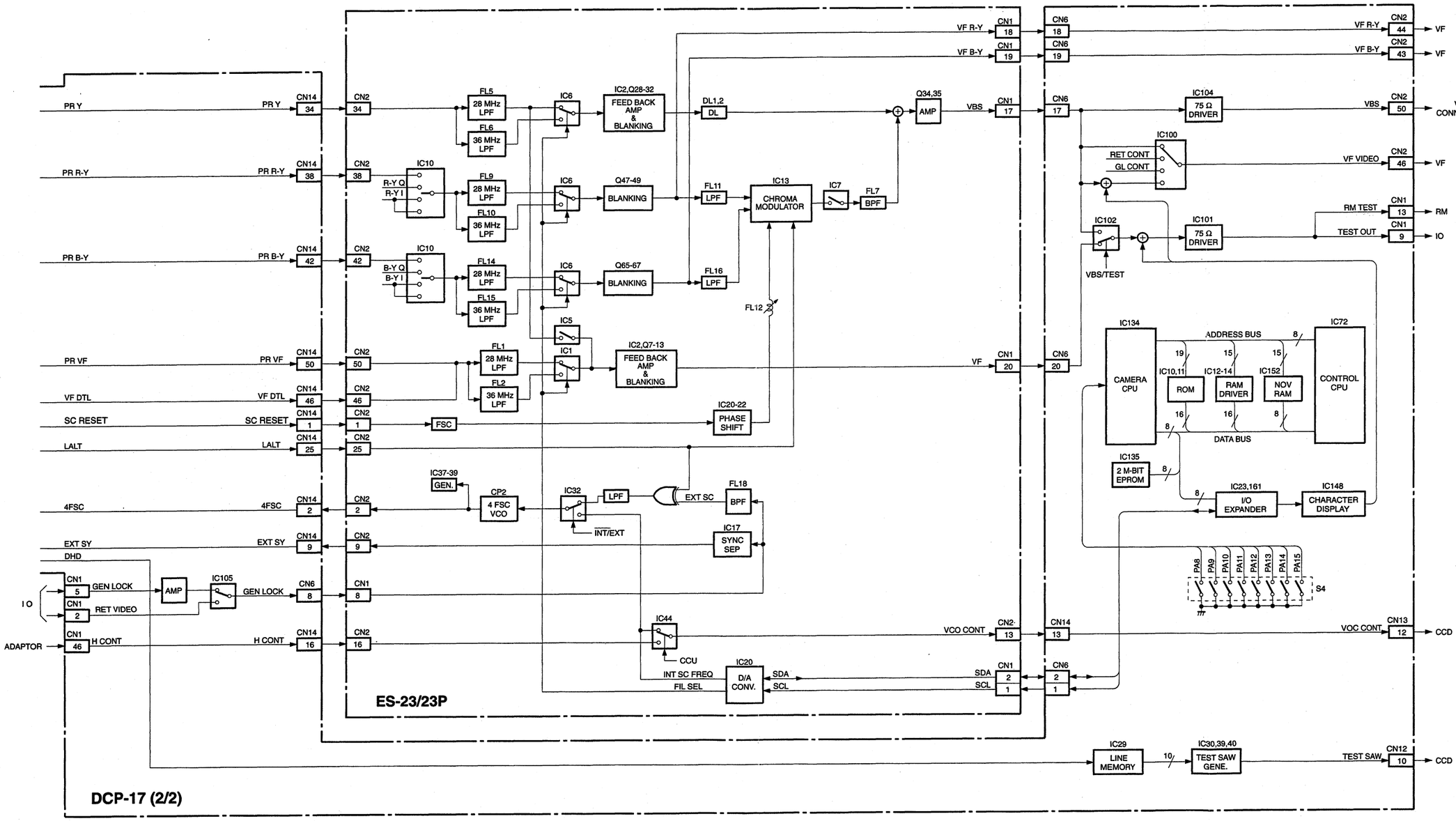

CAMERA BLOCK

AD-155, BF-74, CN-1573, DCP-17 (1/2), RC-69/75 Block Diagram

CAMERA PROCESSOR

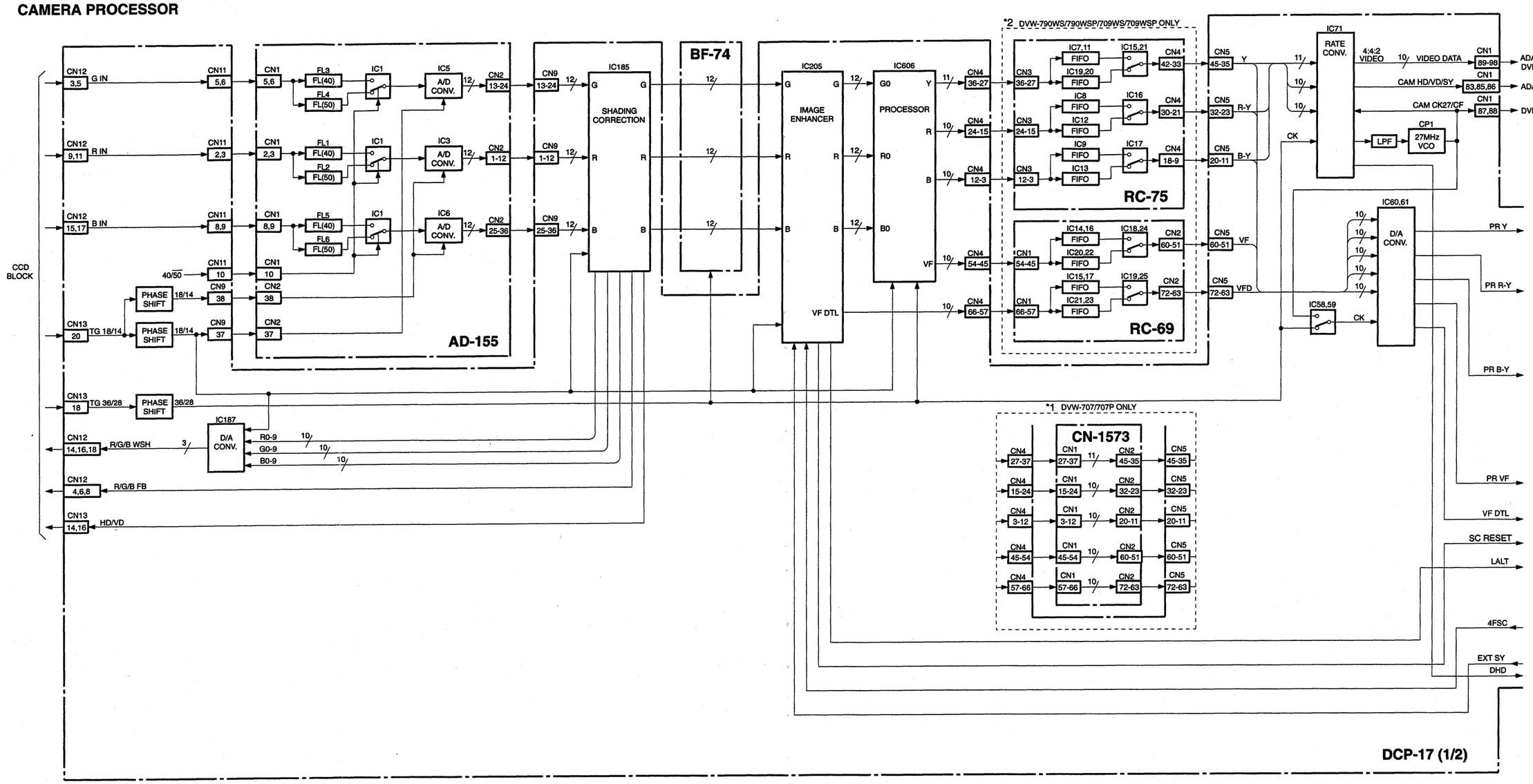

DCP-17 (1/2)

CCD DRIVER

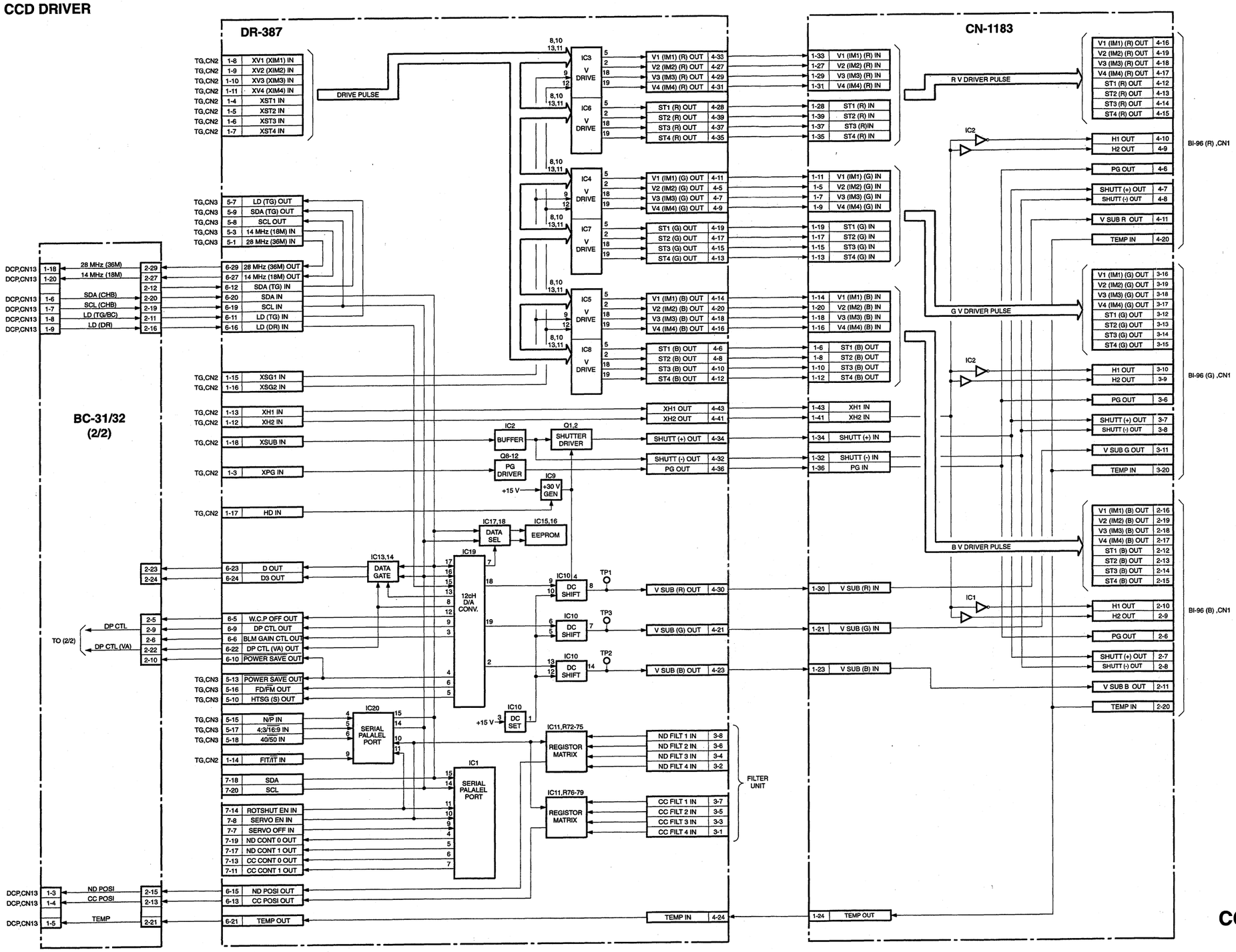

CCD BLOCK (4/4)

TG-206/206P, TG-207/207P Block Diagram

TIMING GENERATOR

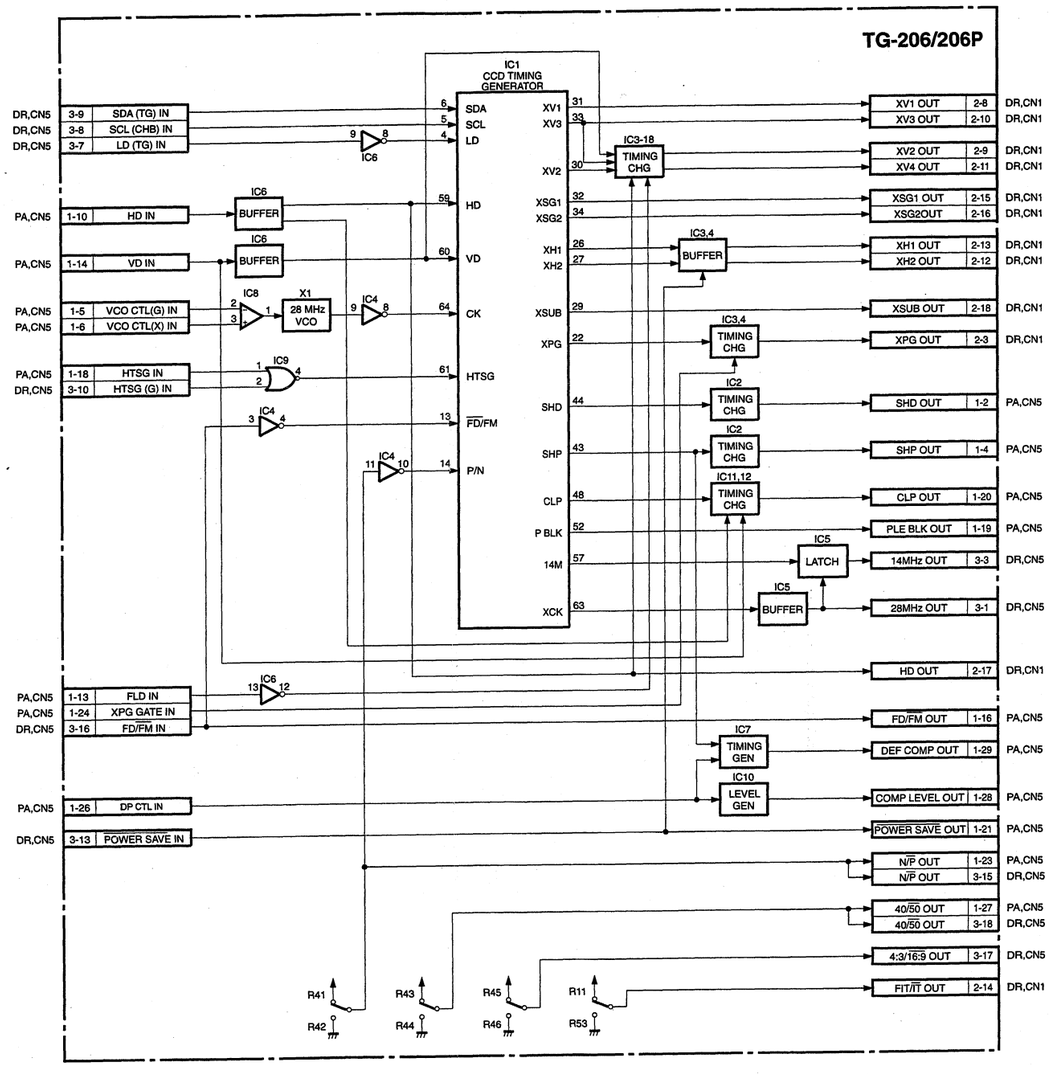

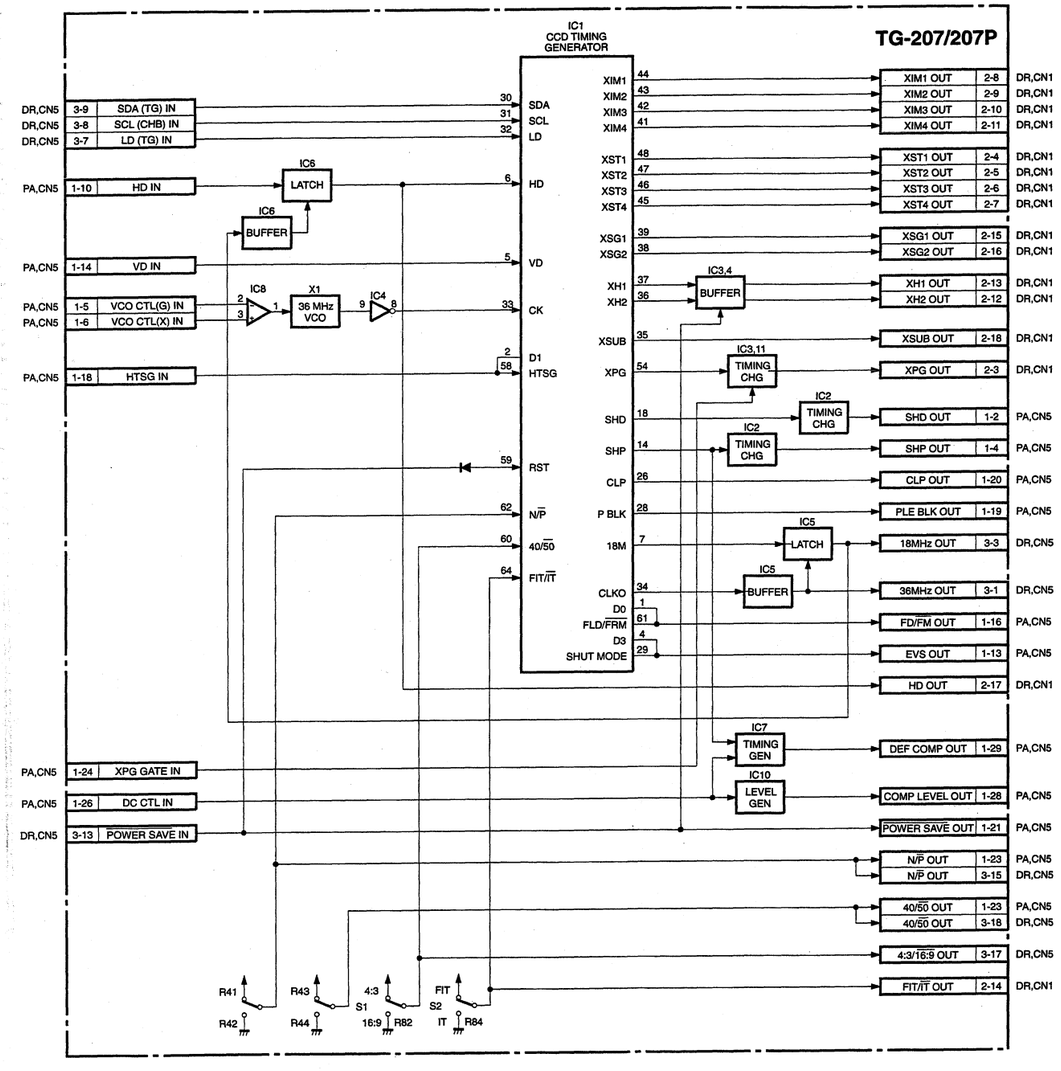

CCD BLOCK (3/4)

3-6

VIDEO AMP

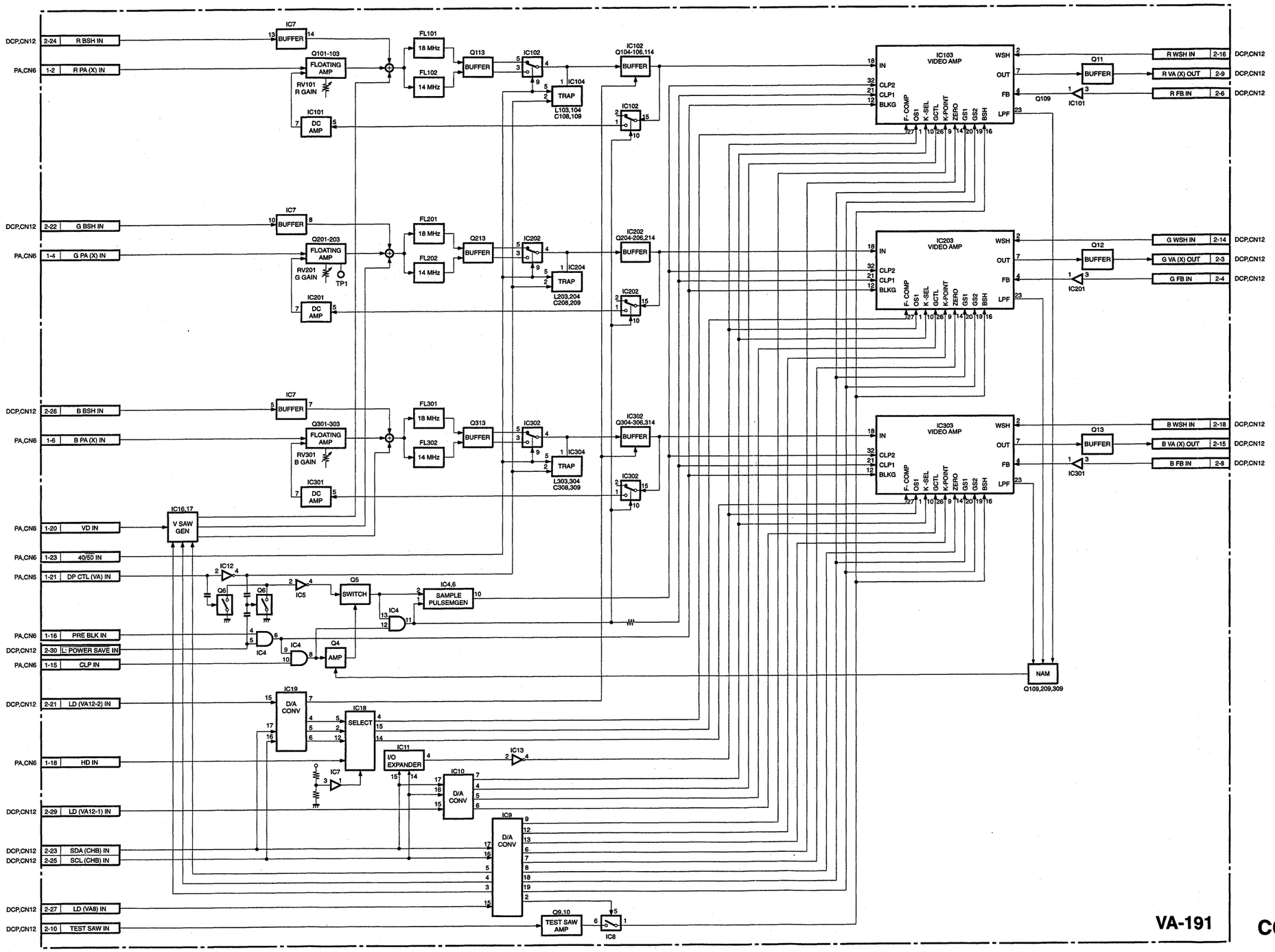

CCD BLOCK (2/4)

BC-31/32 (1/2), BI-96, PA-228 Block Diagram

CCD IMAGER

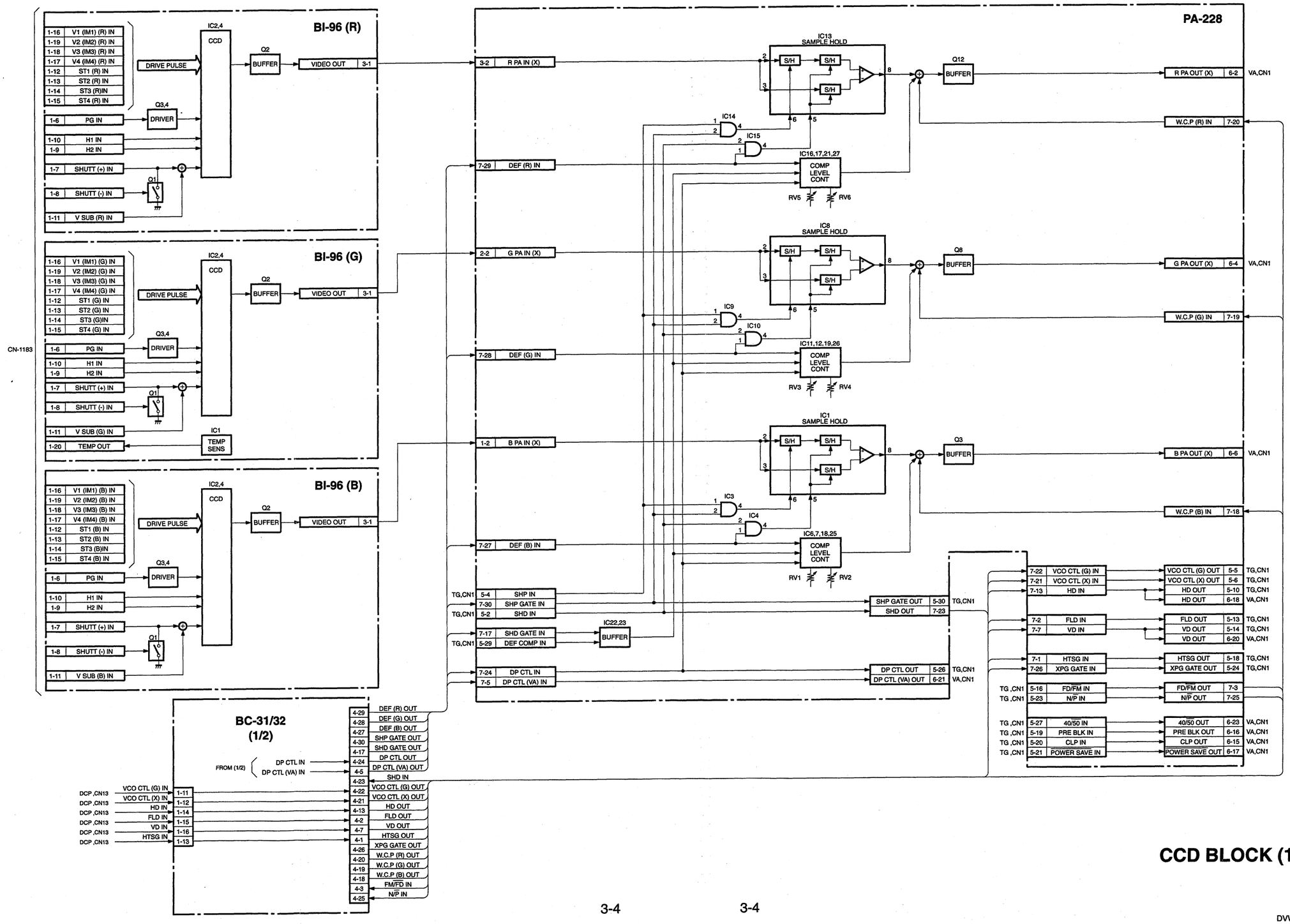

CCD BLOCK (1/4)

CAMERA BLOCK Overall Block Diagram

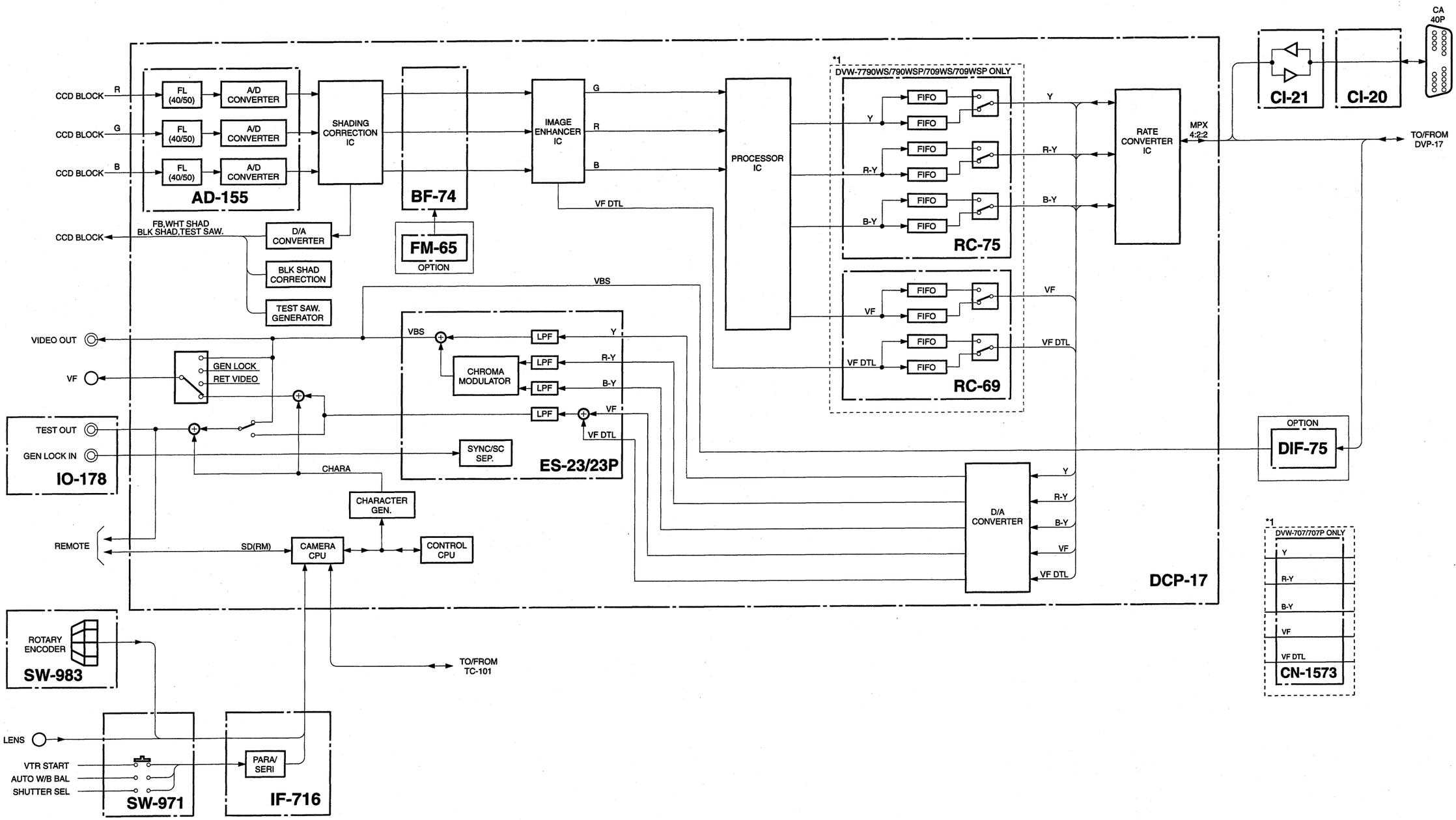

CAMERA BLOCK Overall

CP-329, HN-260, IO-178, KY-293, SW-972, TC-101 (3/3) , VR-248 (2/2) Block Diagram

TIME CODE GENERATOR

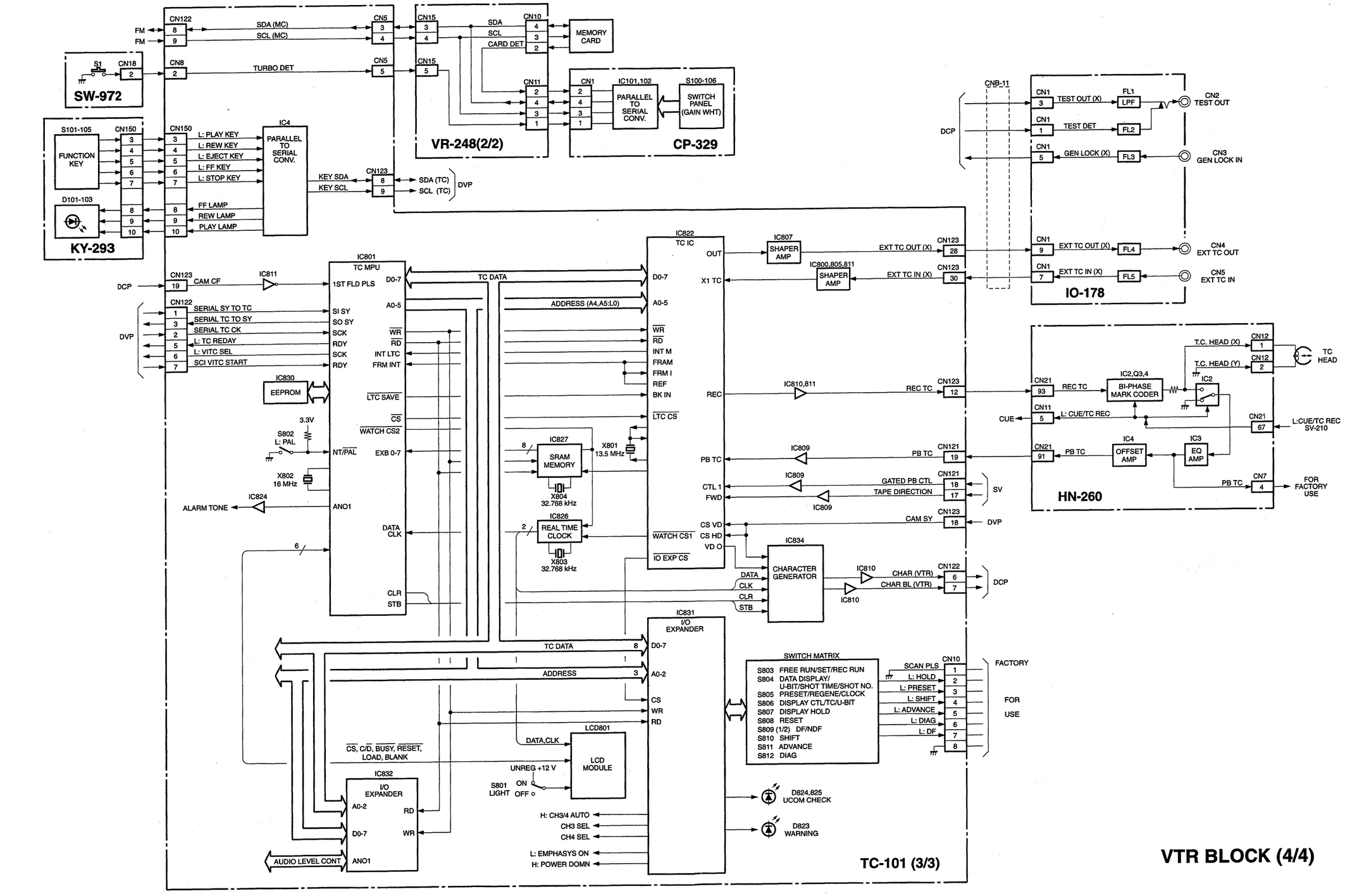

3-15

DVW-790WS/709WS/707
DVW-790WSP/709WSP/707P P2V2

Section 4
Schematic Diagrams

Schematic Diagram Index

		Page
A.	AD-155	4-36
	AXM-21/21B	4-90
B.	BF-74	4-37
	BI-96	4-3
C.	CI-20	4-127
	CI-21	4-46
	CN-1183	4-19
	CN-1573*1	4-47
	CNB-11/11B	4-95
	CP-329	4-113
	CTL-10	4-75
	CUE-2	4-91
D.	DC-101	4-102
	DC-106	4-103
	DCP-17	4-20
	DIF-75 (BKDW-702)	4-116
	DR-387	4-14
	DVP-14	4-62
	DVP-17	4-49
E.	ES-23/23P	4-42
F.	FM-65 (BKDW-704) *3	4-120
	Frame	4-126
H.	HN-260	4-76
	HP-93	4-129
I.	IF-716	4-93
	IO-178	4-114
K.	KY-293	4-129
L.	LP-109	4-126
	LP-111	4-127
M.	MA-94	4-92
	MB-810	4-106
	MB-811	4-108
	MY-93 (BKDW-703)	4-122
P.	PA-228	4-4
	PS-533	4-105
R.	RC-69*2	4-38
	RC-75*2	4-40
	RE-160	4-98
	RE-161	4-100
	RM-180	4-127
S.	SE-275	4-115
	SV-210	4-72
	SW-971	4-128
	SW-972	4-129
	SW-973	4-126
	SW-983	4-128
T.	TC-101	4-78
	TG-206/206P*1	4-10
	TG-207/207P*2	4-13
V.	VA-191	4-6
	VR-248	4-129
	VSE-32	4-127

*1 : For DVW-707/707P
*2 : For DVW-790WS/790WSP/709WS/709WSP
*3 : Dedicated optional board for DVW-790WS/790WSP/709WS/709WSP

4-1

BI-96 (R)/ 96 (G)/ 96 (B)

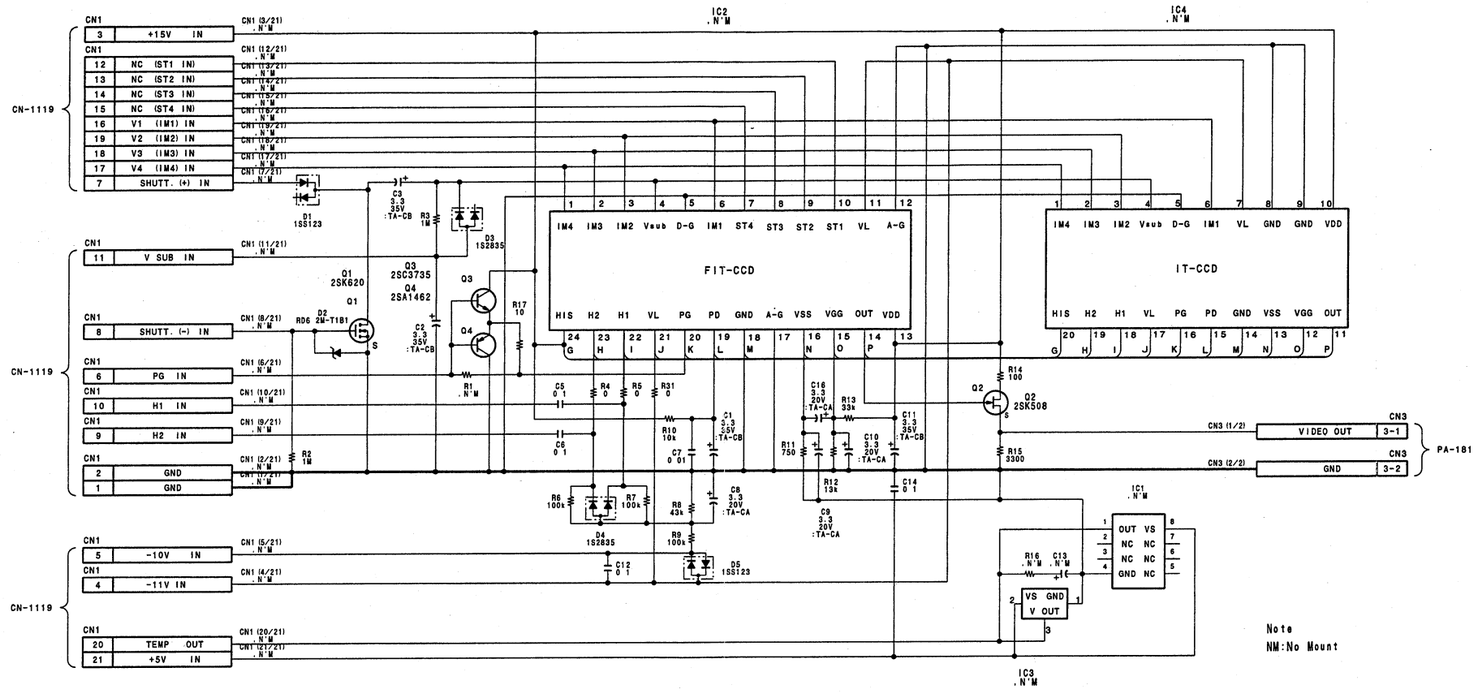

Note
NM:No Mount

BI-96 (R)/ 96 (G)/ 96 (B)
LOT NO. 810-

Note
NM:No Mount

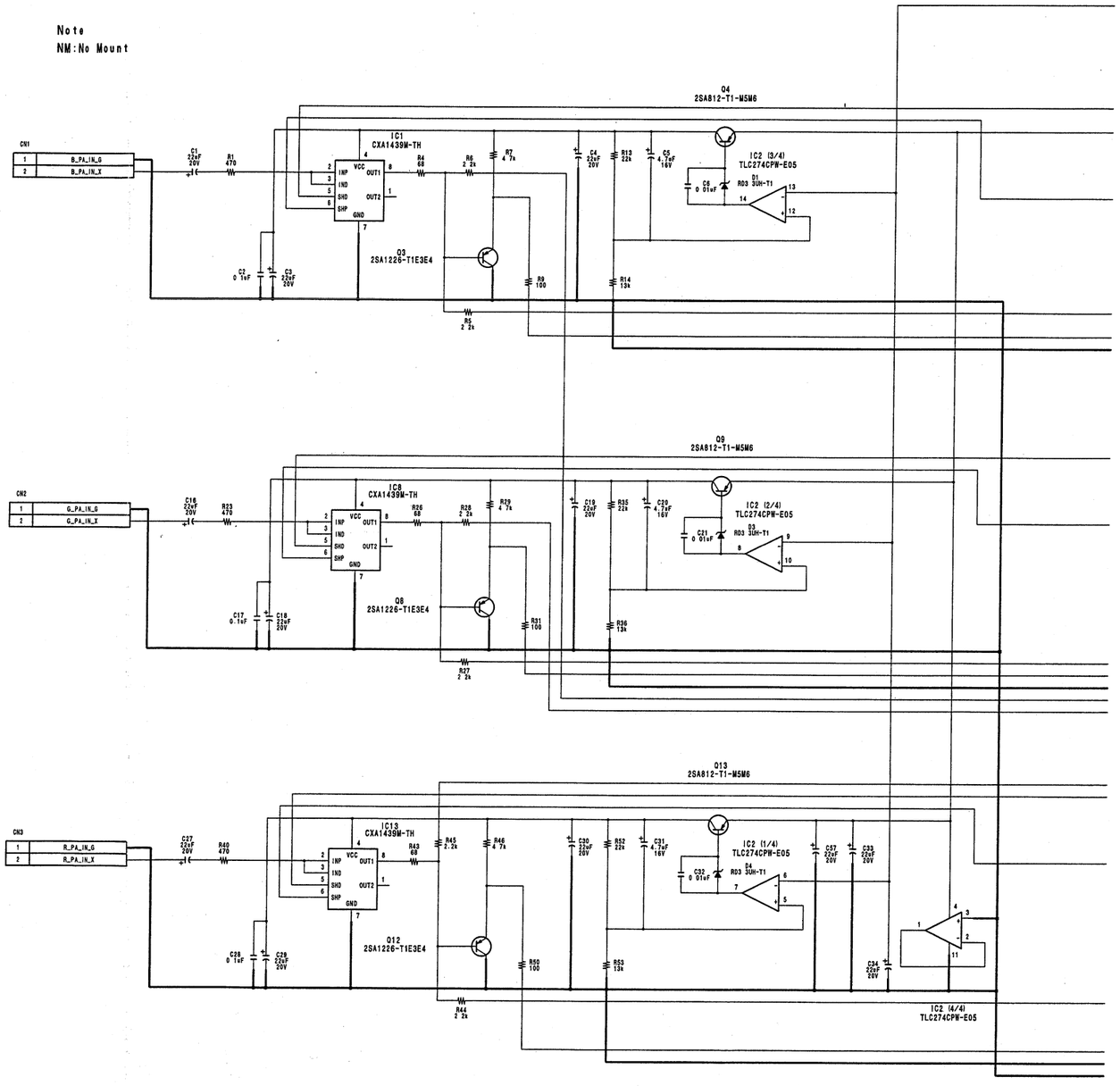

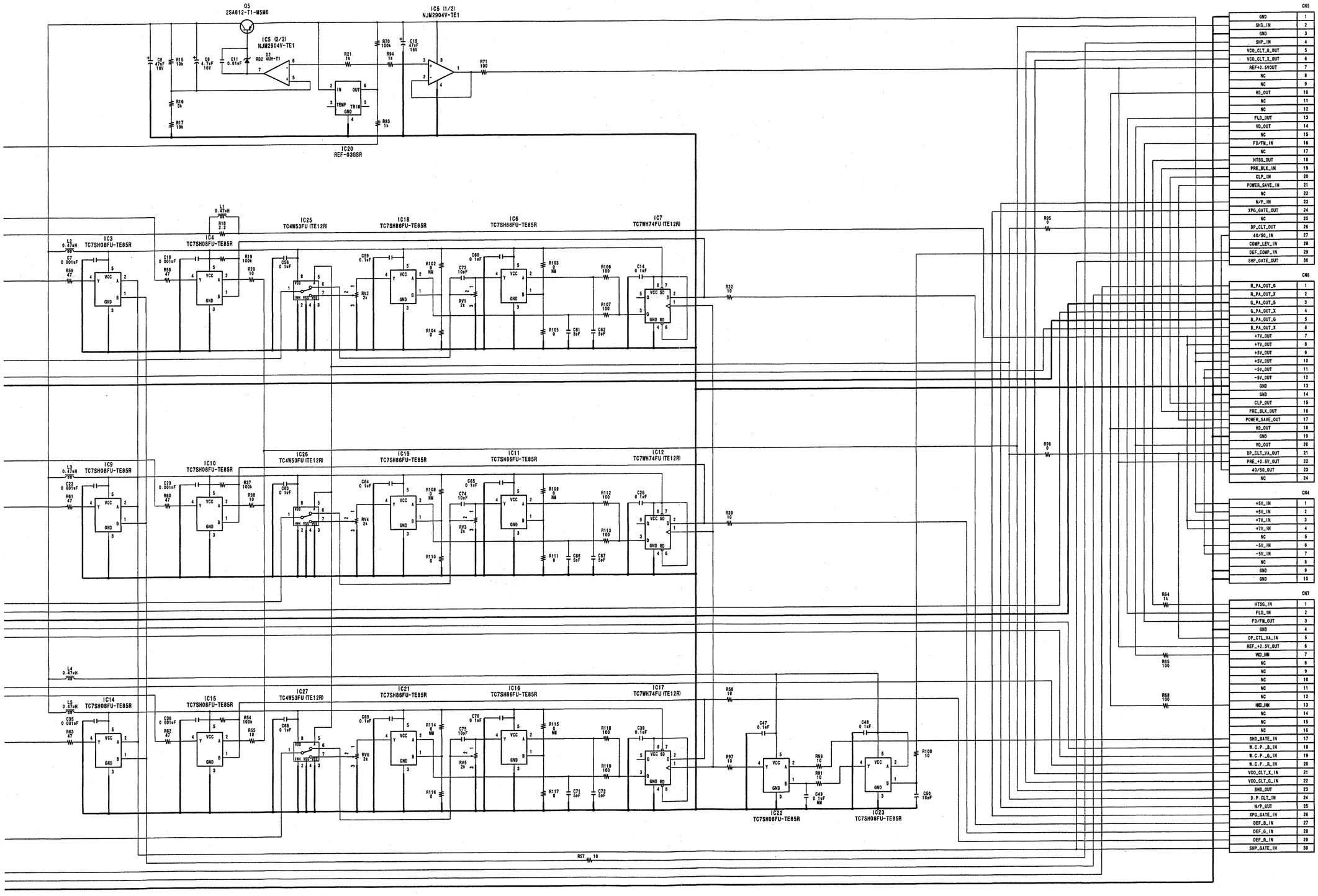

CN5	
GND	1
SHD_IN	2
GND	3
SHP_IN	4
VCO_CLT_G_OUT	5
VCO_CLT_X_OUT	6
REF+2.5VOUT	7
NC	8
NC	9
HD_OUT	10
NC	11
NC	12
FLD_OUT	13
VD_OUT	14
NC	15
FD/FM_IN	16
NC	17
HTSG_OUT	18
PRE_BLK_IN	19
CLP_IN	20
POWER_SAVE_IN	21
NC	22
N/P_IN	23
XPG_GATE_OUT	24
NC	25
DP_CLT_OUT	26
40/50_IN	27
COMP_LEV_IN	28
DEF_COMP_IN	29
SHP_GATE_OUT	30

CN6	
R_PA_OUT_G	1
R_PA_OUT_X	2
G_PA_OUT_G	3
G_PA_OUT_X	4
B_PA_OUT_G	5
B_PA_OUT_X	6
+7V_OUT	7
+7V_OUT	8
+5V_OUT	9
+5V_OUT	10
-5V_OUT	11
-5V_OUT	12
GND	13
GND	14
CLP_OUT	15
PRE_BLK_OUT	16
POWER_SAVE_OUT	17
HD_OUT	18
GND	19
VD_OUT	20
DP_CLT_VA_OUT	21
PRE_+2.5V_OUT	22
40/50_OUT	23
NC	24

CN4	
+5V_IN	1
+5V_IN	2
+7V_IN	3
+7V_IN	4
NC	5
-5V_IN	6
-5V_IN	7
NC	8
GND	9
GND	10

CN7	
HTSG_IN	1
FLD_IN	2
FD/FM_OUT	3
GND	4
DP_CTL_VA_IN	5
REF_+2.5V_OUT	6
VD_IN	7
NC	8
NC	9
NC	10
NC	11
NC	12
HD_IN	13
NC	14
NC	15
NC	16
SHD_GATE_IN	17
W.C.P._B_IN	18
W.C.P._G_IN	19
W.C.P._R_IN	20
VCO_CLT_X_IN	21
VCO_CLT_G_IN	22
SHD_OUT	23
D.P.CLT_IN	24
N/P_OUT	25
XPG_GATE_IN	26
DEF_B_IN	27
DEF_G_IN	28
DEF_R_IN	29
SHP_GATE_IN	30

PA-228
LOT NO. 810-

DVW-790WS/709WS/707
DVW-790WSP/709WSP/707P P2V2

4-5 4-5

'-SP1386 / DRUCK 21

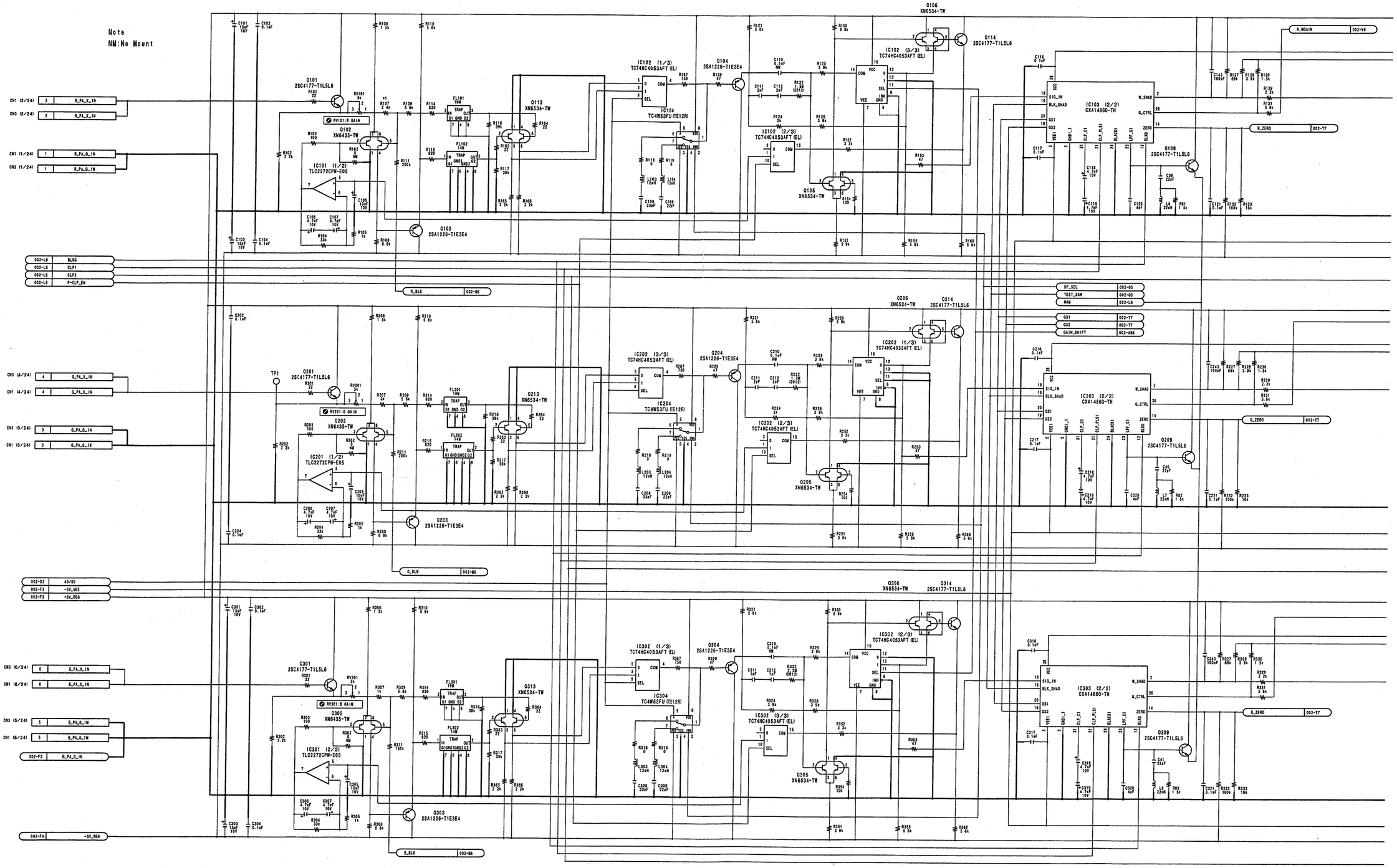

4-6 4-6

DVW-790WS/709WS/707
DVW-790WSP/709WSP/707P P2V2

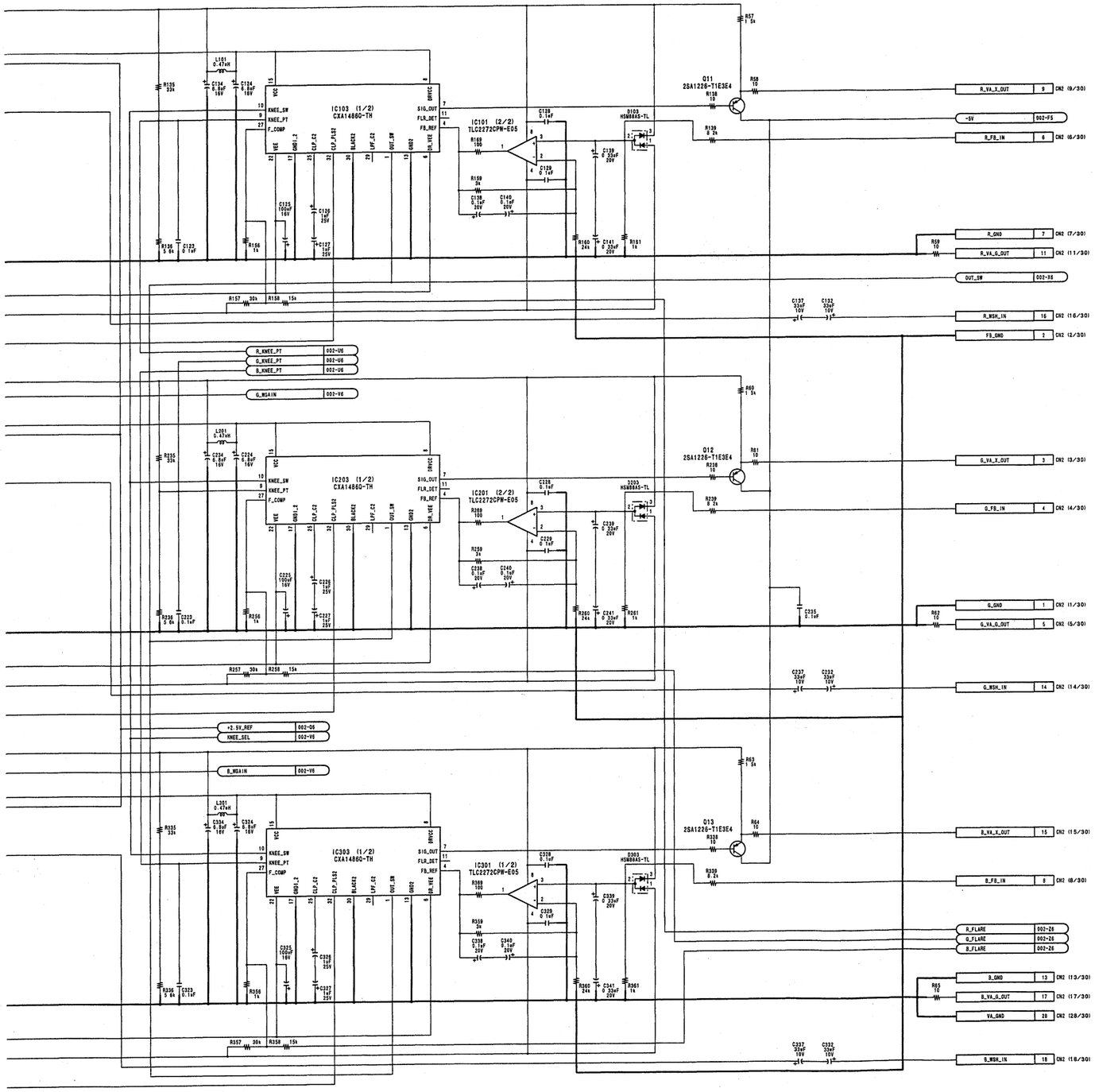

MARK	CHANGED INFORMATION	SERIAL NO.
*1	R107 2k → 2.4k	10056 and higher (707 SY) 30006 and higher (707 J/709WS J/ 790WS J) 10086 and higher (709WS SY) 10061 and higher (790WS SY) 40106 and higher (707P) 40176 and higher (709WSP) 40216 and higher (790WSP)

VA-191 (1/2)
LOT NO. 810-

DVW-790WS/709WS/707
DVW-790WSP/709WSP/707P P2V2

4-7 4-7

I J K L M N O P

1 2 3 4 5

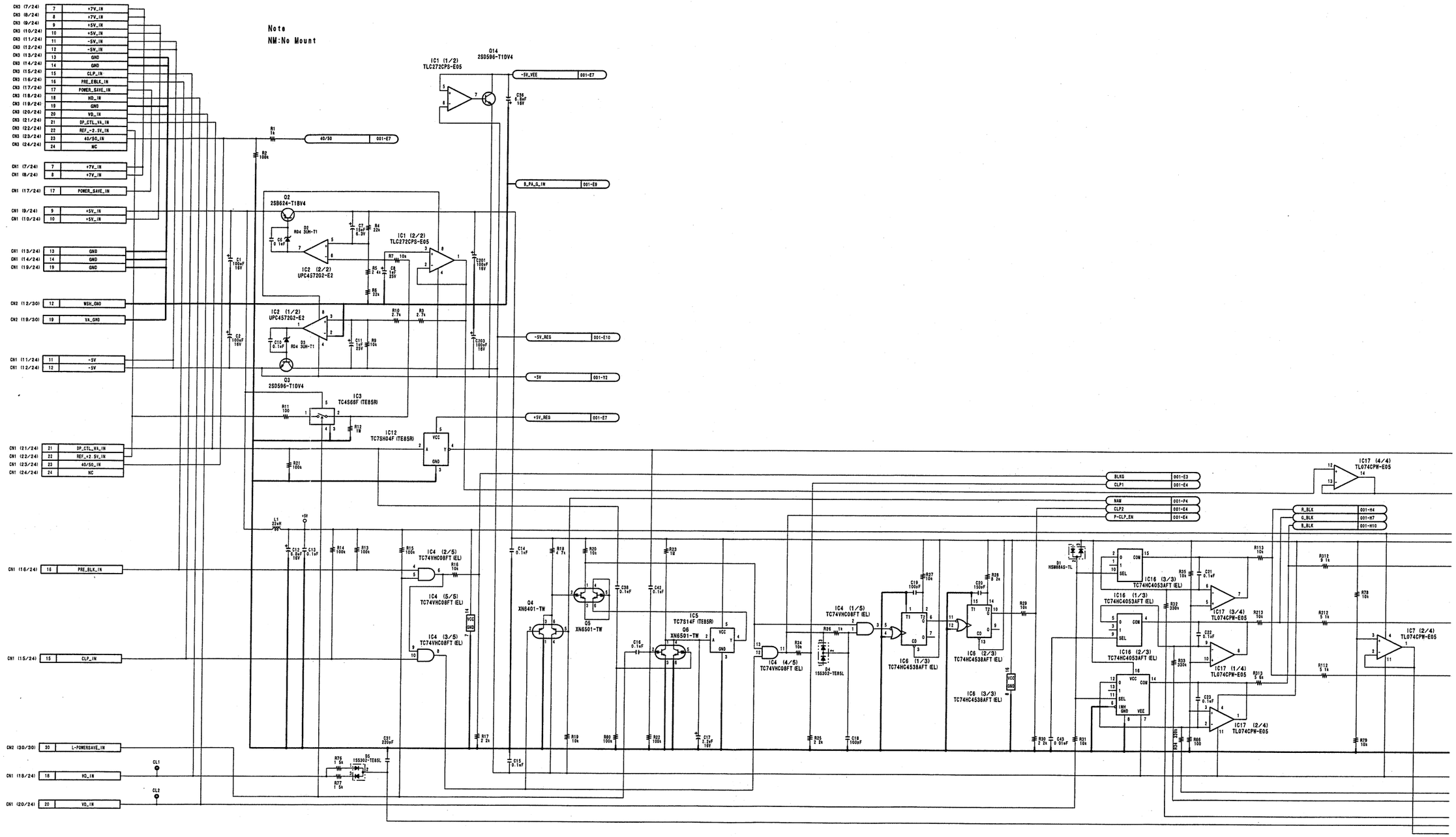
Note
NM:No Mount
IC1 (1/2) TLC272CPS-E05
Q14 2SD596-T1DV4
IC1 (2/2) TLC272CPS-E05
Q2 2SB624-T1BV4
IC2 (2/2) UPC4572G2-E2
IC2 (1/2) UPC4572G2-E2
Q3 2SD596-T1DV4
IC3 TC4S66F (TE85R)
IC12 TC7SH04F (TE85R)
IC4 (2/5) TC74VHC08FT (EL)
IC4 (5/5) TC74VHC08FT (EL)
IC4 (3/5) TC74VHC08FT (EL)
IC4 (4/5) TC74VHC08FT (EL)
IC4 (1/5) TC74VHC08FT (EL)
IC5 TC7S14F (TE85R)
IC6 (1/3) TC74HC4538AFT (EL)
IC6 (2/3) TC74HC4538AFT (EL)
IC6 (3/3) TC74HC4538AFT (EL)
IC16 (3/3) TC74HC4053AFT (EL)
IC16 (1/3) TC74HC4053AFT (EL)
IC16 (2/3) TC74HC4053AFT (EL)
IC17 (4/4) TL074CPW-E05
IC17 (3/4) TL074CPW-E05
IC17 (1/4) TL074CPW-E05
IC17 (2/4) TL074CPW-E05
IC7 (2/4) TL074CPW-E05
-5V_VEE
40/50
B_PA_G_IN
-5V_REG
-5V
+5V_REG
BLKG
CLP1
NAM
CLP2
P-CLP_EN
R_BLK
G_BLK
B_BLK
CN3 (7/24) +7V_IN
CN3 (8/24) +7V_IN
CN3 (9/24) +5V_IN
CN3 (10/24) +5V_IN
CN3 (11/24) -5V_IN
CN3 (12/24) -5V_IN
CN3 (13/24) GND
CN3 (14/24) GND
CN3 (15/24) CLP_IN
CN3 (16/24) PRE_EBLK_IN
CN3 (17/24) POWER_SAVE_IN
CN3 (18/24) HD_IN
CN3 (19/24) GND
CN3 (20/24) VD_IN
CN3 (21/24) SP_CTL_VA_IN
CN3 (22/24) REF_+2.5V_IN
CN3 (23/24) 40/50_IN
CN3 (24/24) NC
CN1 (7/24) +7V_IN
CN1 (8/24) +7V_IN
CN1 (17/24) POWER_SAVE_IN
CN1 (9/24) +5V_IN
CN1 (10/24) +5V_IN
CN1 (13/24) GND
CN1 (14/24) GND
CN1 (19/24) GND
CN2 (12/30) WSH_GND
CN2 (19/30) VA_GND
CN1 (11/24) -5V
CN1 (12/24) -5V
CN1 (21/24) SP_CTL_VA_IN
CN1 (22/24) REF_+2.5V_IN
CN1 (23/24) 40/50_IN
CN1 (24/24) NC
CN1 (16/24) PRE_BLK_IN
CN1 (15/24) CLP_IN
CN2 (30/30) L-POWERSAVE_IN
CN1 (18/24) HD_IN
CN1 (20/24) VD_IN
CL1
CL2

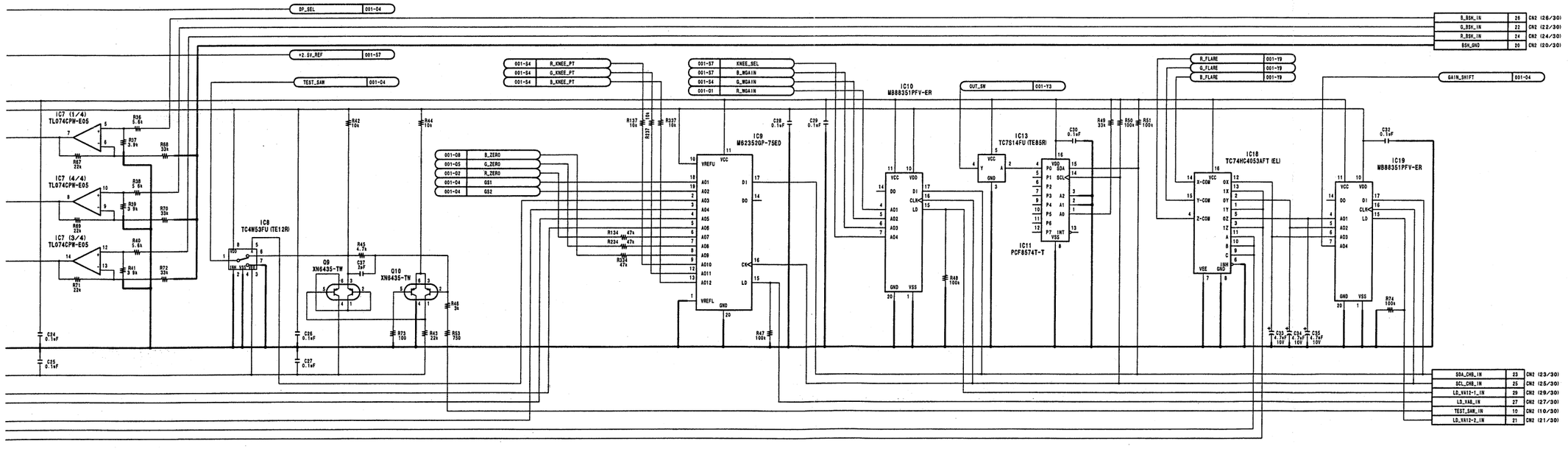

VA-191 (2/2)
LOT NO. 810-

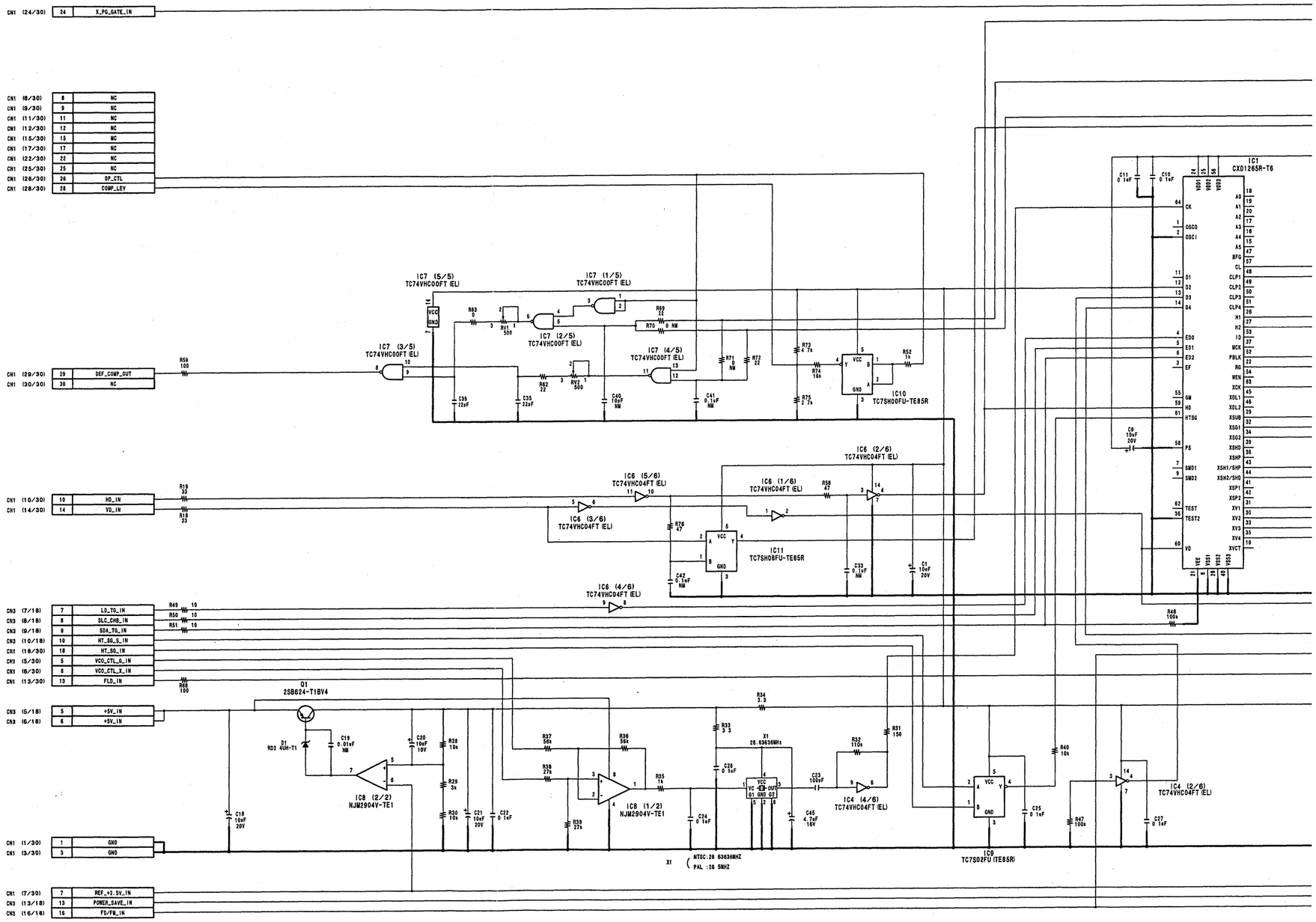
CN1 (24/30) 24 X_PG_GATE_IN
CN1 (8/30) 8 NC
CN1 (9/30) 9 NC
CN1 (11/30) 11 NC
CN1 (12/30) 12 NC
CN1 (15/30) 15 NC
CN1 (17/30) 17 NC
CN1 (22/30) 22 NC
CN1 (25/30) 25 NC
CN1 (26/30) 26 DP_CTL
CN1 (28/30) 28 COMP_LEV
CN1 (29/30) 29 DEF_COMP_OUT
CN1 (30/30) 30 NC
CN1 (10/30) 10 HD_IN
CN1 (14/30) 14 VD_IN
CN3 (7/18) 7 LD_TG_IN
CN3 (8/18) 8 SLC_CHR_IN
CN3 (9/18) 9 SDA_TG_IN
CN3 (10/18) 10 HT_SG_S_IN
CN1 (18/30) 18 HT_SG_IN
CN1 (5/30) 5 VCO_CTL_S_IN
CN1 (6/30) 6 VCO_CTL_X_IN
CN1 (13/30) 13 FLD_IN
CN3 (5/18) 5 +5V_IN
CN3 (6/18) 6 +5V_IN
CN1 (1/30) 1 GND
CN1 (3/30) 3 GND
CN1 (7/30) 7 REF_+2.5V_IN
CN3 (13/18) 13 POWER_SAVE_IN
CN3 (16/18) 16 FD/FM_IN
IC1 CXD1265R-T6
IC7 (5/5) TC74VHC00FT (EL)
IC7 (1/5) TC74VHC00FT (EL)
IC7 (2/5) TC74VHC00FT (EL)
IC7 (3/5) TC74VHC00FT (EL)
IC7 (4/5) TC74VHC00FT (EL)
IC10 TC7SH00FU-TE85R
IC6 (2/6) TC74VHC04FT (EL)
IC6 (5/6) TC74VHC04FT (EL)
IC6 (1/6) TC74VHC04FT (EL)
IC6 (3/6) TC74VHC04FT (EL)
IC11 TC7SH08FU-TE85R
IC6 (4/6) TC74VHC04FT (EL)
Q1 2SB624-T1BV4
D1 RD2.4UM-T1
IC8 (2/2) NJM2904V-TE1
IC8 (1/2) NJM2904V-TE1
X1 28.63636MHz
IC4 (6/6) TC74VHC04FT (EL)
IC4 (2/6) TC74VHC04FT (EL)
IC9 TC7S02FU (TE85R)
X1 (NTSC:28.63636MHZ PAL :28.5MHZ
R59 100
R19 33
R18 33
R49 10
R50 10
R51 10
R66 100
R48 100k
R63 0
R69 22
R70 0 NM
R71 0 NM
R72 22
R73 4.7k
R74 10k
R75 2.7k
R52 1k
R62 22
R53 500
R58 47
R76 47
R34 3.3
R33 3.3
R37 56k
R36 56k
R39 27k
R35 1k
R32 110k
R31 150
R40 10k
R47 100k
C11 0.1nF
C10 0.1nF
C9 10nF 20V
C39 12nF
C35 22nF
C40 10nF NM
C41 0.1nF NM
C42 0.1nF NM
C33 0.1nF NM
C1 10nF 20V
C19 0.01nF NM
C20 10nF 10V
C18 10nF 20V
C21 10nF 20V
C22 0.1nF
C28 0.1nF
C24 0.1nF
C23 1000pF
C45 4.7nF 16V
C25 0.1nF
C27 0.1nF

MARK	CHANGED INFORMATION	SERIAL NO.
*1	R5 (N) 91 → 1.1k	10021 through 10055 (707 SY)
	R5 (N) 1.1k → 91	10056 and higher (707 SY)
		30006 and higher (707 J)
	R5 (P) 91 → 130	40166 and higher (707P)
*2	C3 (P) 10pF → 22pF	40106 and higher (707P)

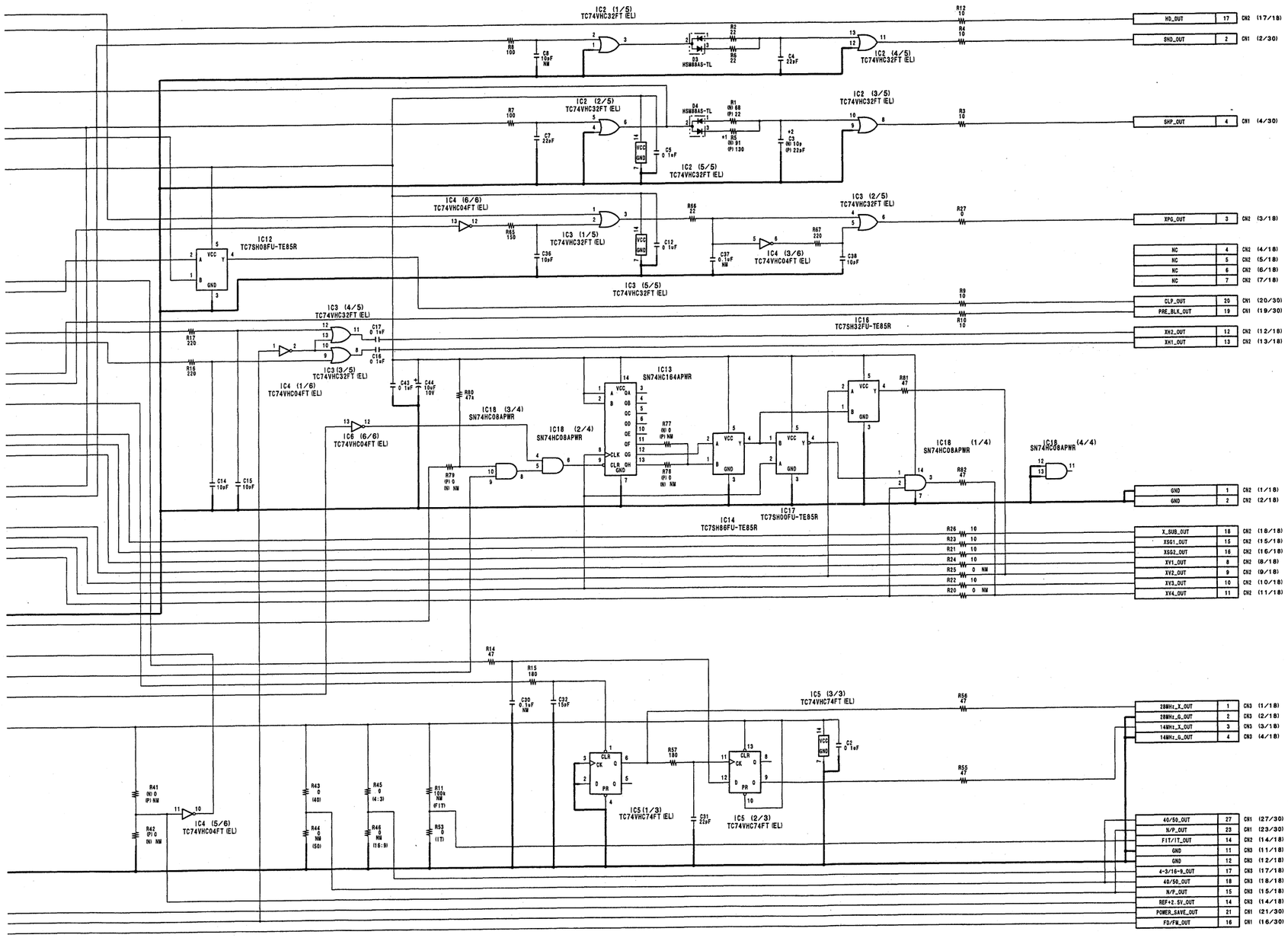

Notes
1. NM : No Mount
2. (N) : NTSC only
3. (P) : PAL only

TG-206 (for DVW-707)
TG-206P (for DVW-707P)
LOT NO. 811-

DVW-790WS/709WS/707
DVW-790WSP/709WSP/707P P2V2

MARK	CHANGED INFORMATION	SERIAL NO.
*1	R67 220 → 100	30006 and higher (709WS J/790WS J) 10086 and higher (709WS SY/790WS SY) 40176 and higher (709WSP) 40266 and higher (790WSP)

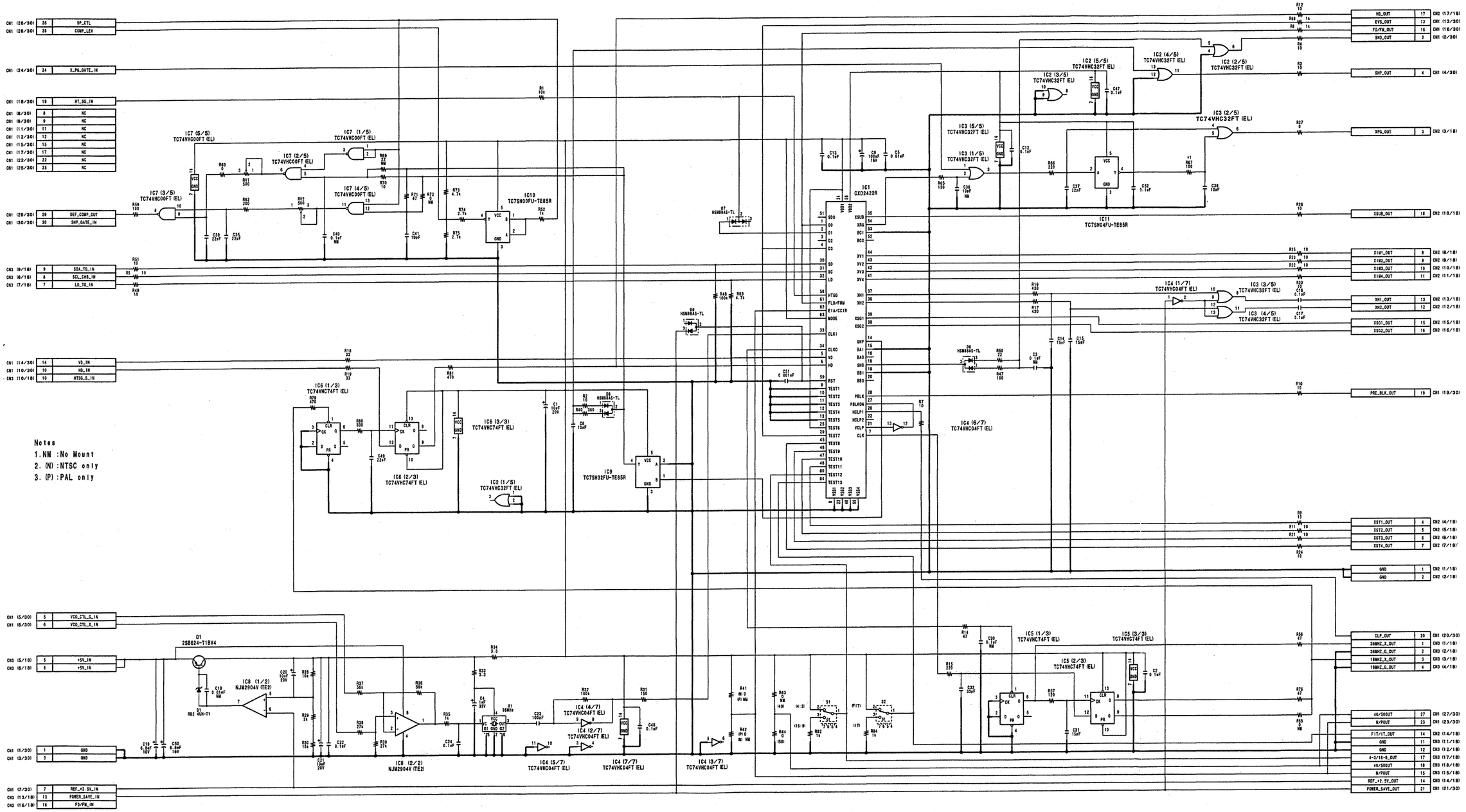

Notes
1. NM : No Mount
2. (N) : NTSC only
3. (P) : PAL only

TG-207 (for DVW-790WS/709WS)
TG-207P (for DVW-790WSP/709WSP)
LOT NO. 810-

DVW-790WS/709WS/707
DVW-790WSP/709WSP/707P P2V2

4-13 4-13

DR-387 (1/2)

MARK	CHANGED INFORMATION	SERIAL NO.
*1	R11 DELETED	10021 and higher (707 SY)
	C7 DELETED	30006 and higher (707 J/709WS J/790WS J)
	C50 2.2uF ADDED	10036 and higher (709WS SY/790WS SY)
		40036 and higher (707P)
		40101 and higher (709WSP)
		40086 and higher (790WSP)

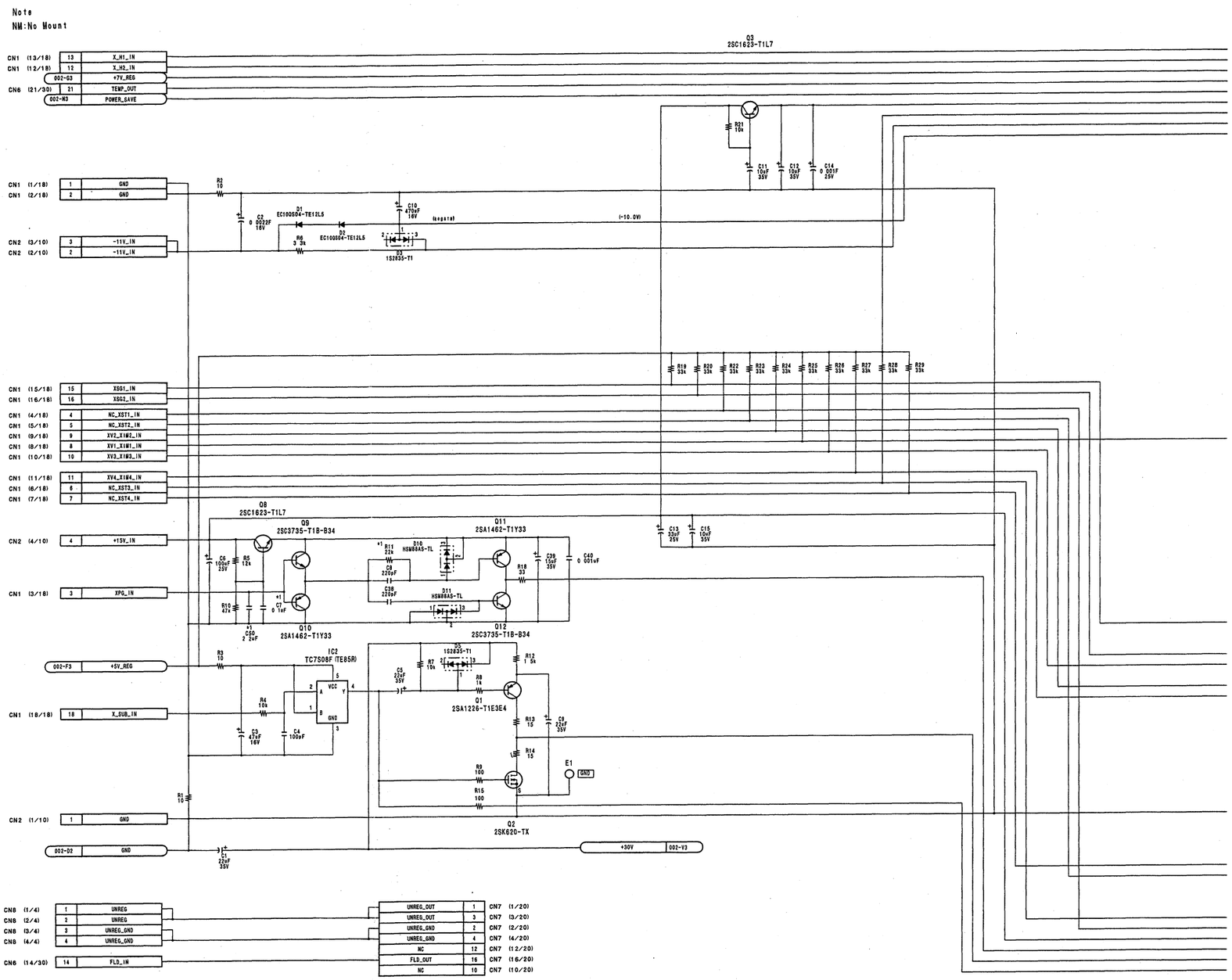

4-14

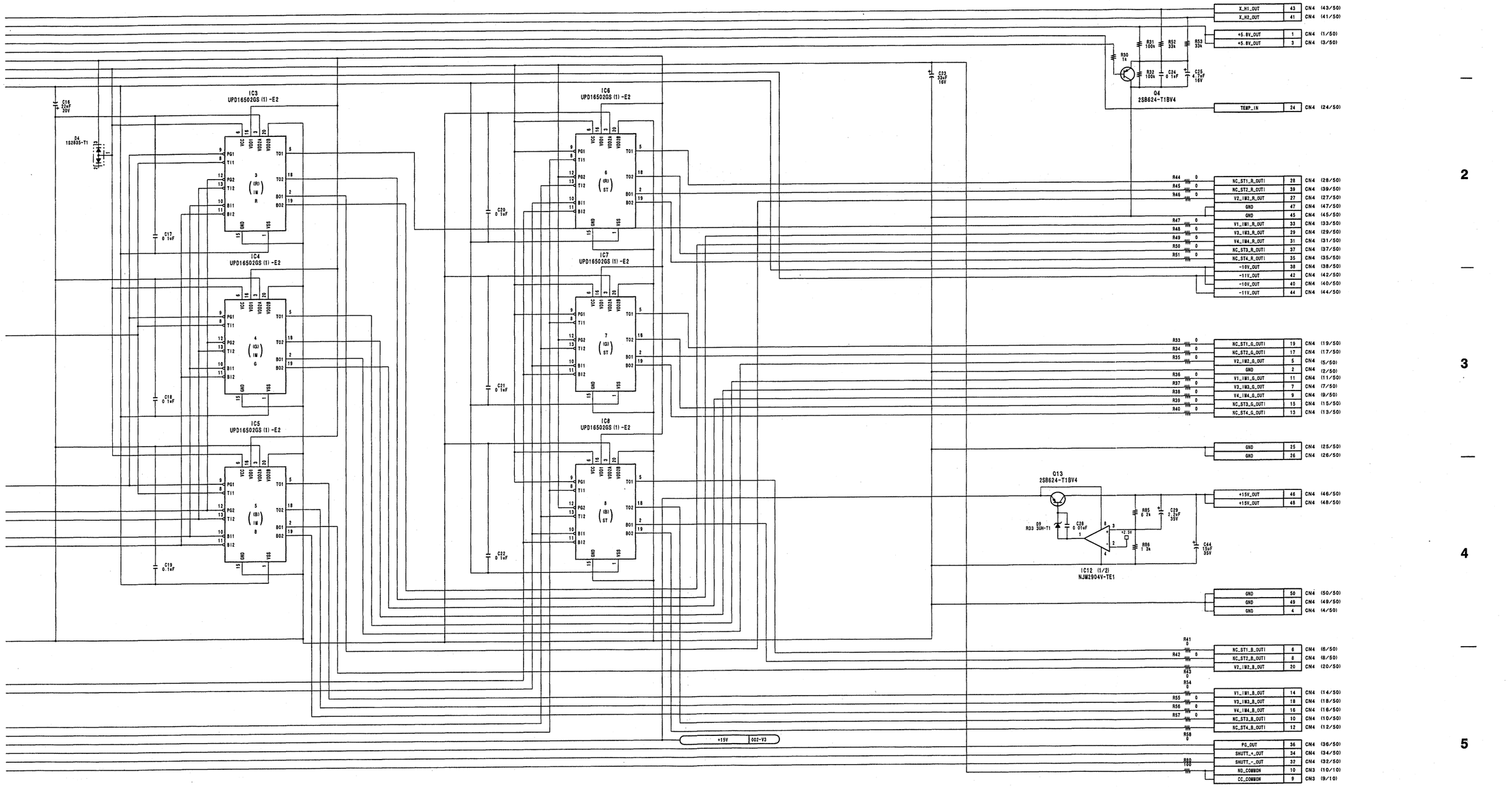

DR-387 (1/2)
LOT NO. 810

DR-387 (2/2)

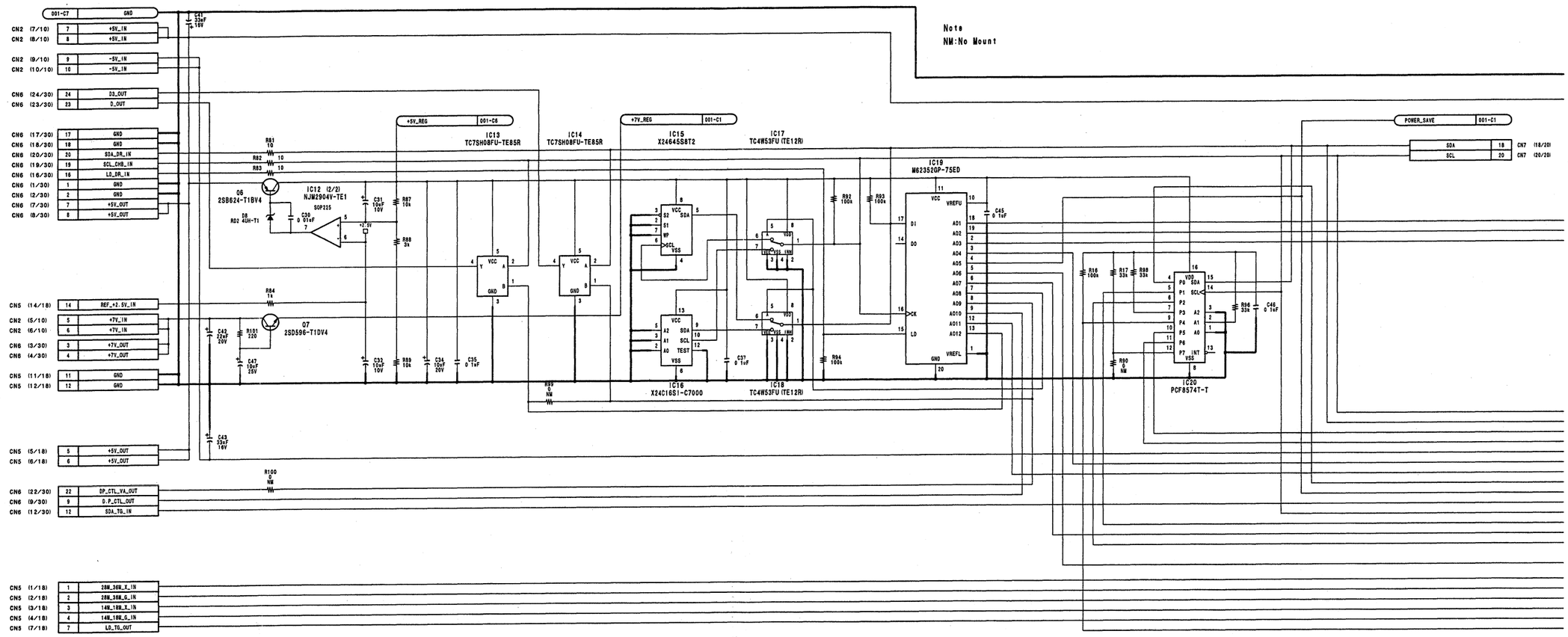
Note
NM:No Mount
IC13 TC7SH08FU-TE85R
IC14 TC7SH08FU-TE85R
IC15 X24645S8T2
IC17 TC4W53FU (TE12R)
IC19 M62352GP-75ED
IC12 (2/2) NJM2904V-TE1
IC16 X24C16S1-C7000
IC18 TC4W53FU (TE12R)
IC20 PCF8574T-T
Q6 2SB624-T1BV4
Q7 2SD596-T1DV4
D6 RD2.4EM-T1
+5V_REG
+7V_REG
POWER_SAVE
CN2 (7/10) +5V_IN
CN2 (8/10) +5V_IN
CN2 (9/10) -5V_IN
CN2 (10/10) -5V_IN
CN6 (24/30) D3_OUT
CN6 (23/30) D_OUT
CN6 (17/30) GND
CN6 (18/30) GND
CN6 (20/30) SDA_DR_IN
CN6 (19/30) SCL_CHB_IN
CN6 (16/30) LD_DR_IN
CN6 (1/30) GND
CN6 (2/30) GND
CN6 (7/30) +5V_OUT
CN6 (8/30) +5V_OUT
CN5 (14/18) REF_+2.5V_IN
CN2 (5/10) +7V_IN
CN2 (6/10) +7V_IN
CN6 (3/30) +7V_OUT
CN6 (4/30) +7V_OUT
CN5 (11/18) GND
CN5 (12/18) GND
CN5 (5/18) +5V_OUT
CN5 (6/18) +5V_OUT
CN6 (22/30) DP_CTL_VA_OUT
CN6 (9/30) D.P_CTL_OUT
CN6 (12/30) SDA_TG_IN
CN5 (1/18) 28M_36M_X_IN
CN5 (2/18) 28M_36M_G_IN
CN5 (3/18) 14M_18M_X_IN
CN5 (4/18) 14M_18M_G_IN
CN5 (7/18) LD_TG_OUT
CN7 (18/20)
CN7 (20/20)

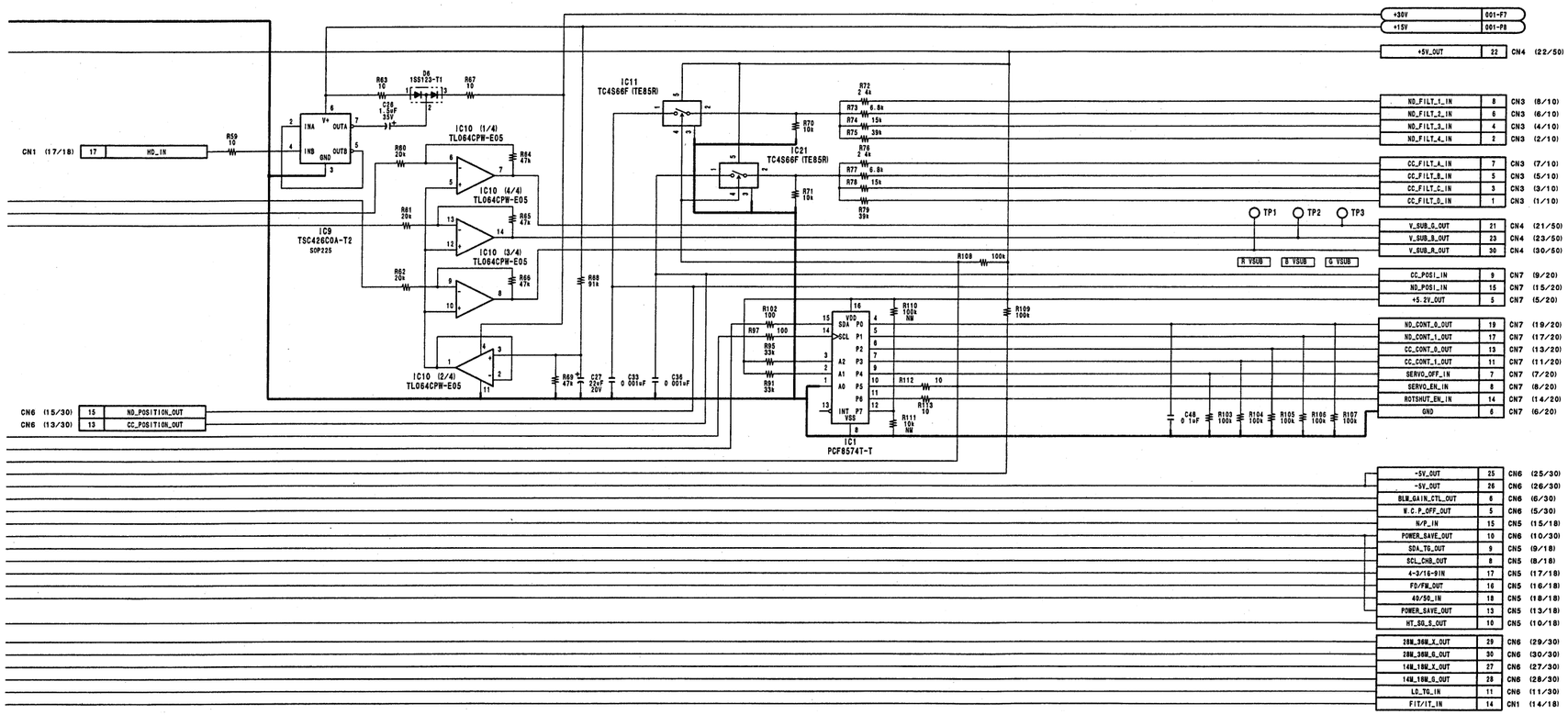

DR-387 (2/2)
LOT NO. 810-

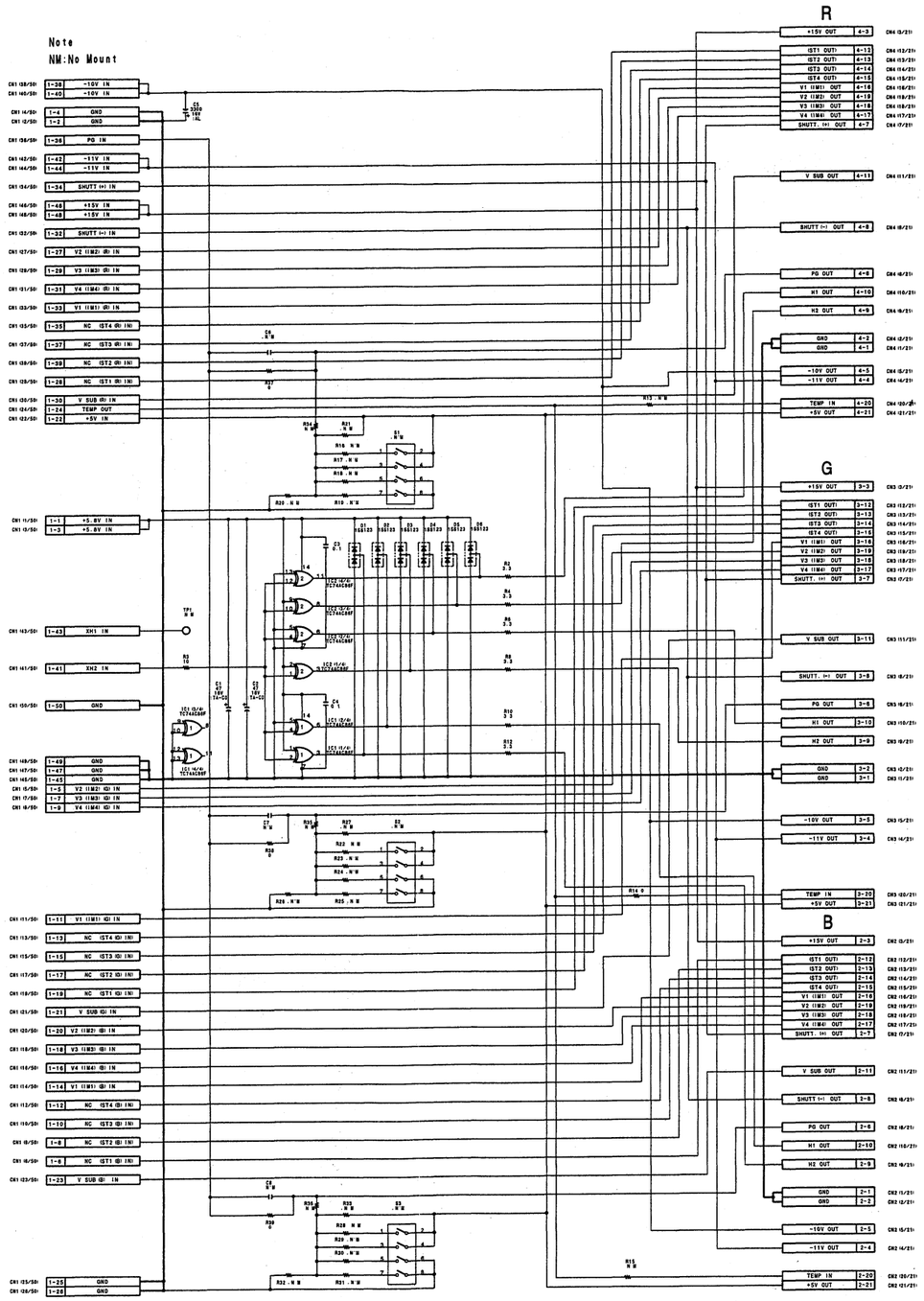

CN-1183
LOT NO. 810-

DCP-17 (1/8)

MARK	CHANGED INFORMATION	SERIAL NO.
*1	R565 47k → 33k R563 DELETED	10056 and higher (707 SY) 30011 and higher (707 J) 10106 and higher (709WS SY) 30006 and higher (709WS J/790WS J) 10091 and higher (790WS SY) 40121 and higher (707P) 40191 and higher (709WSP) 40336 and higher (790WSP)

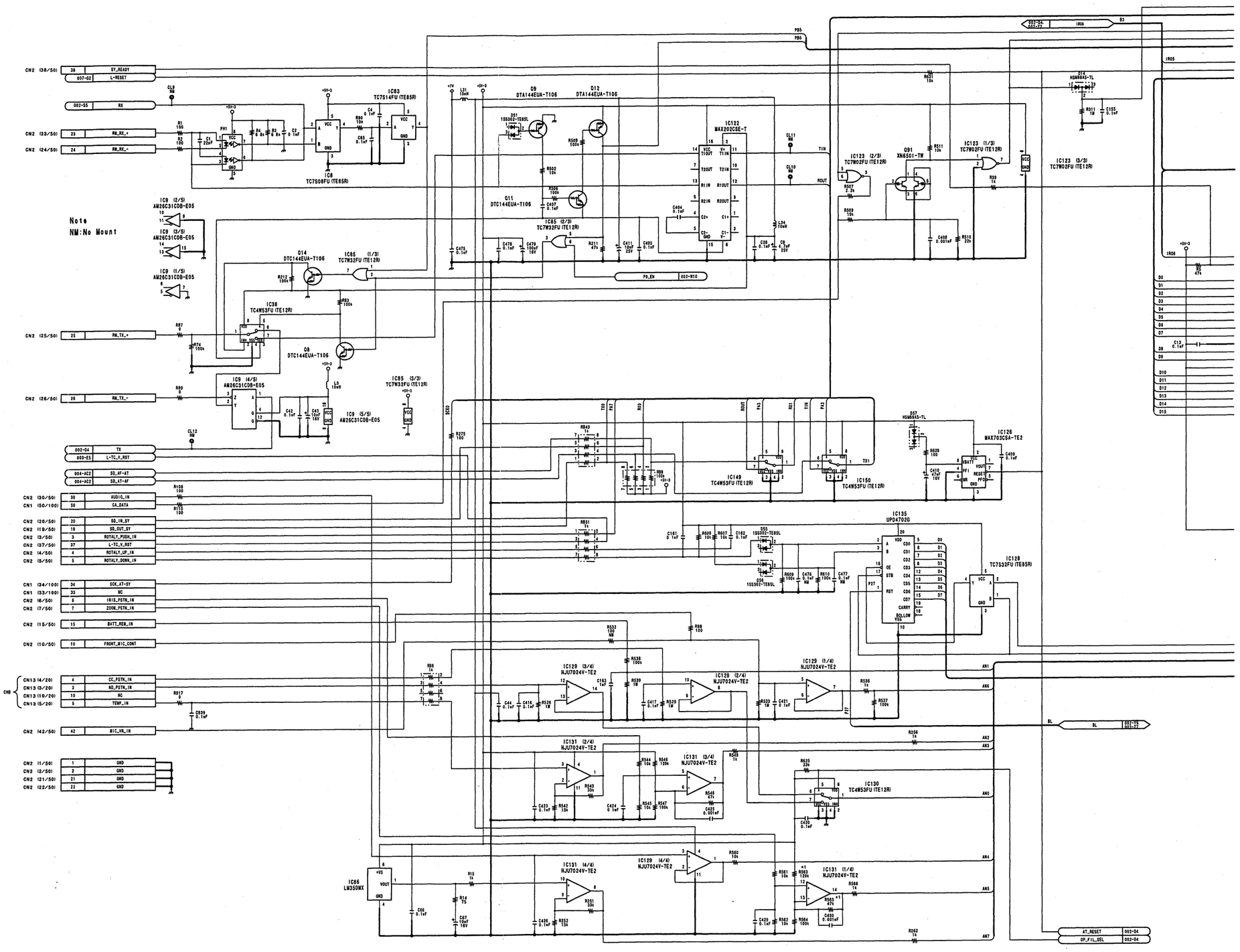

4-20

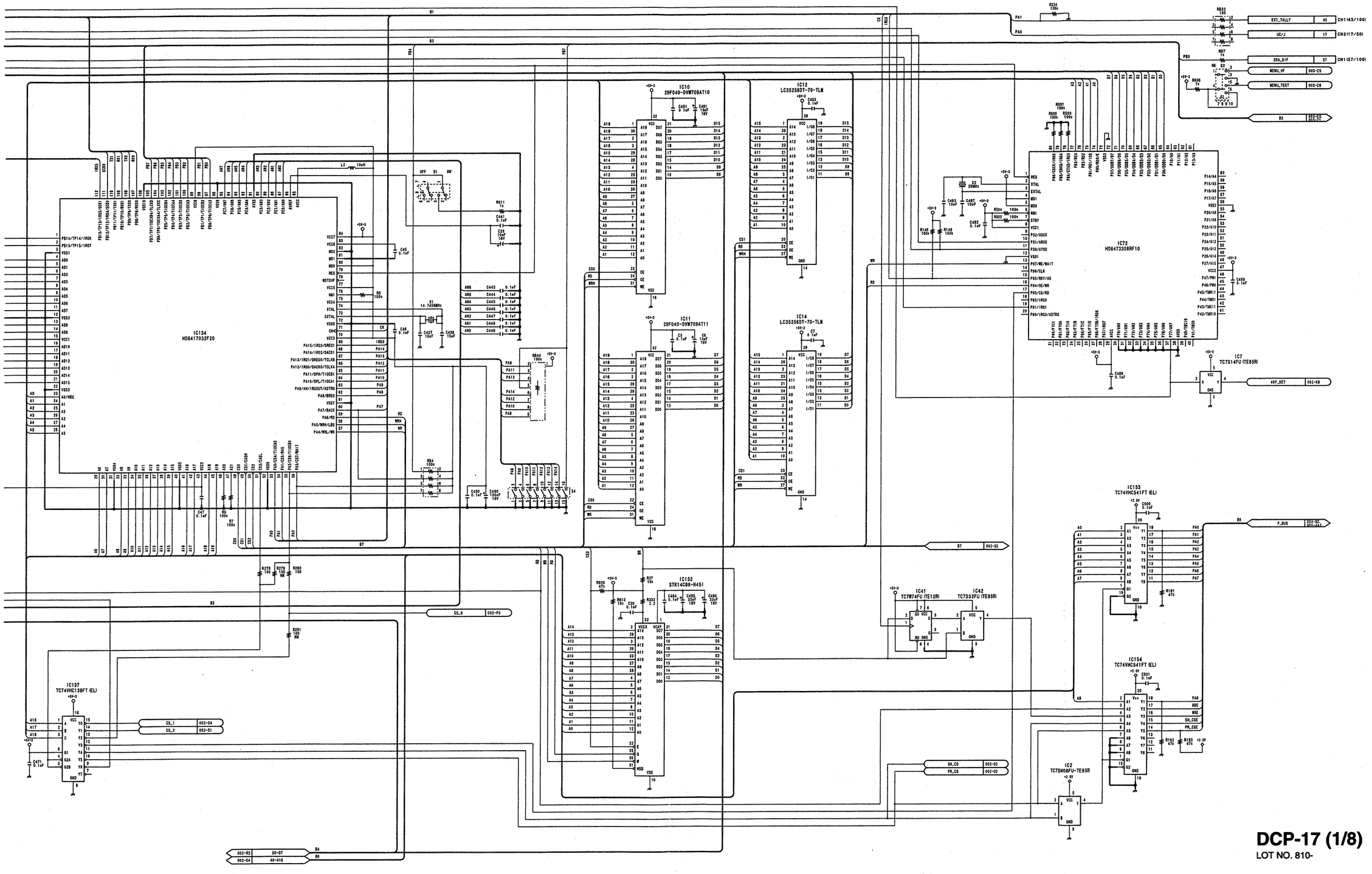

DVW-790WS/709WS/707
DVW-790WSP/709WSP/707P P2V2

4-21 4-21

DCP-17 (1/8)
LOT NO. 810-

SP1386 / DRUCK 37

DCP-17 (2/8)

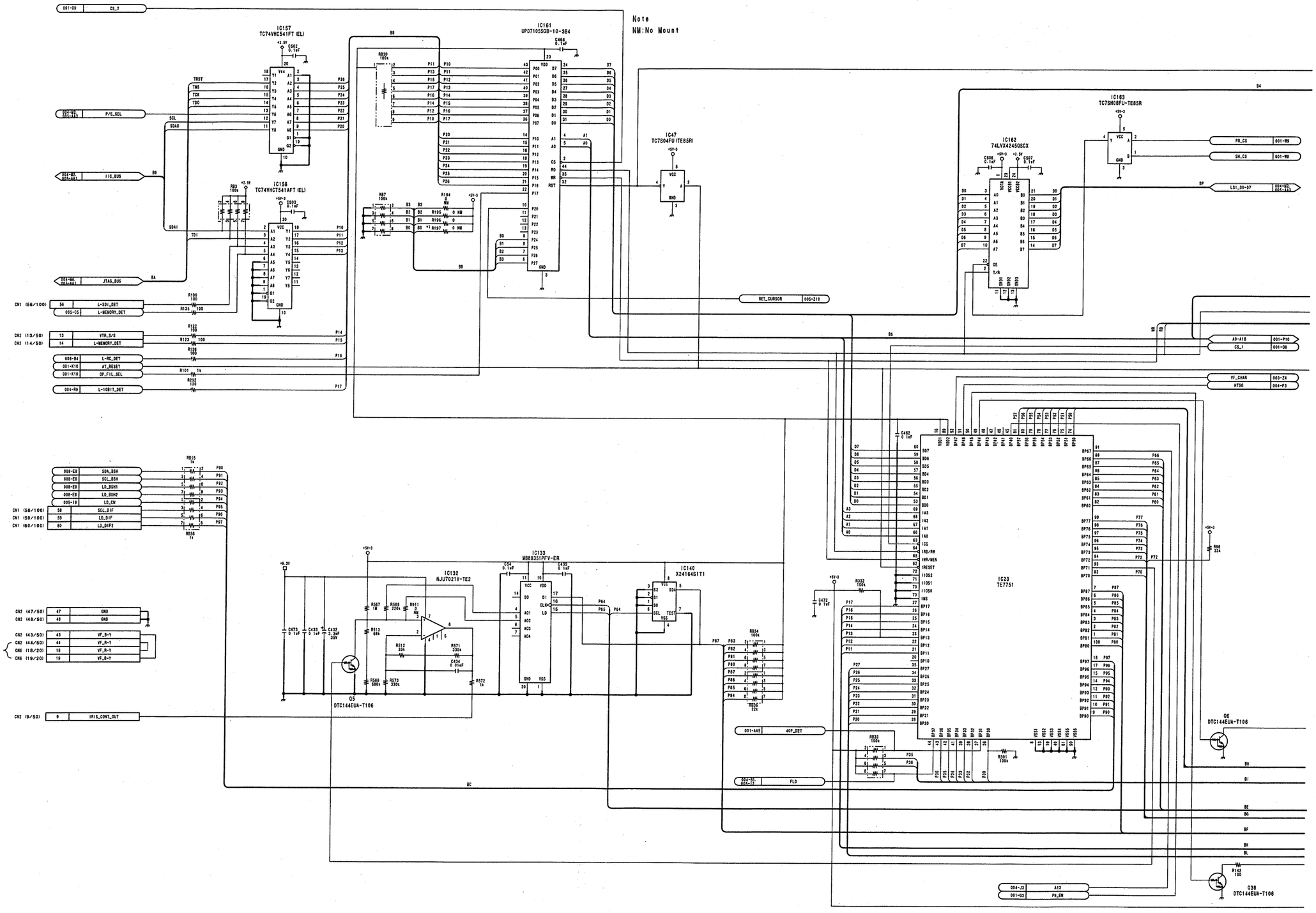

4-22

DVW-790WS/709WS/707
DVW-790WSP/709WSP/707P P2V2

MARK	CHANGED INFORMATION	SERIAL NO.
*1	R197 ADDED	10056 and higher (707 SY) 30011 and higher (707 J) 10106 and higher (709WS SY) 30006 and higher (709WS J/790WS J) 10091 and higher (790WS SY) 40121 and higher (707P) 40191 and higher (709WSP) 40336 and higher (790WSP)

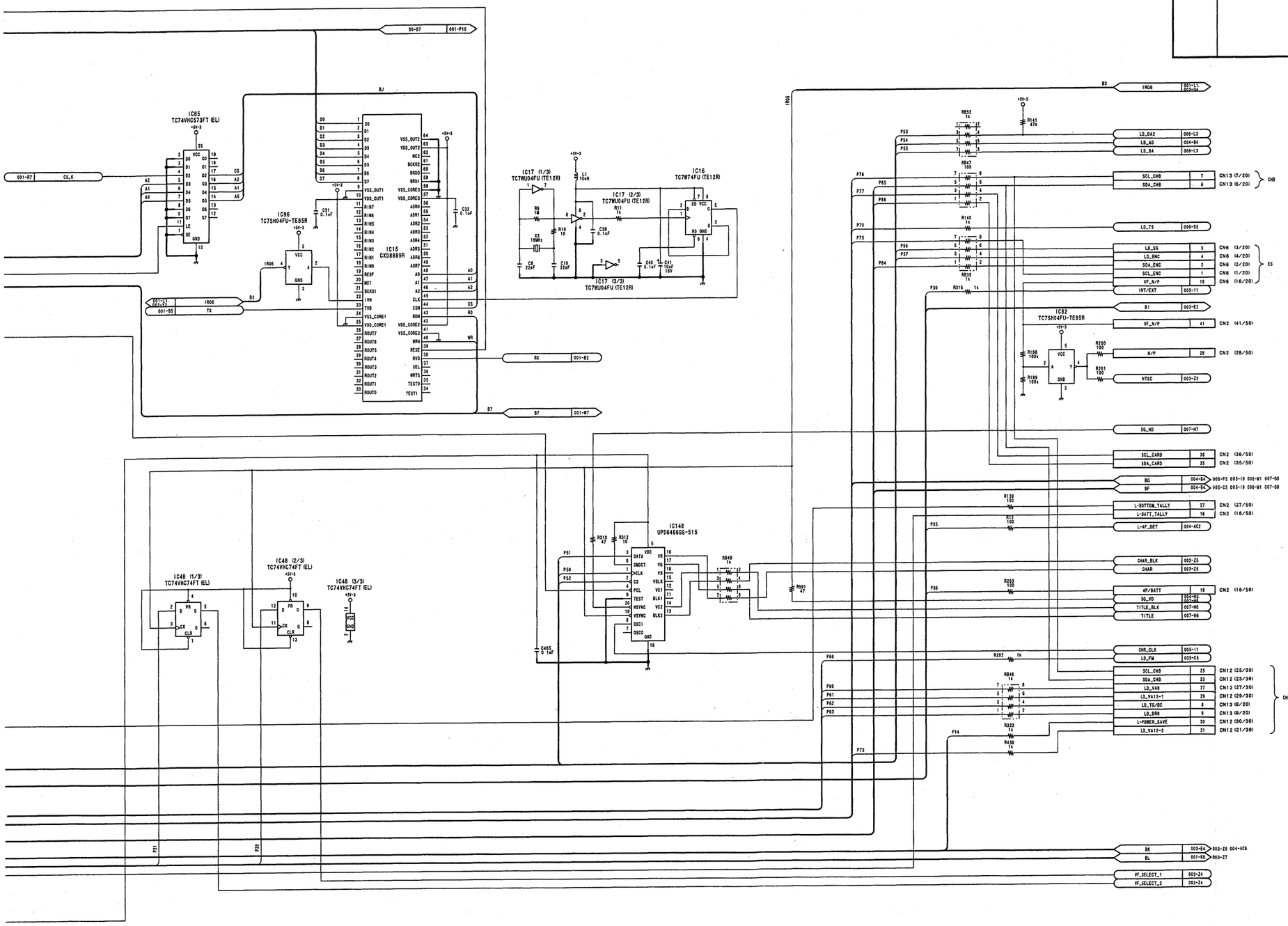

DCP-17 (2/8)
LOT NO. 810-

DCP-17 (3/8)

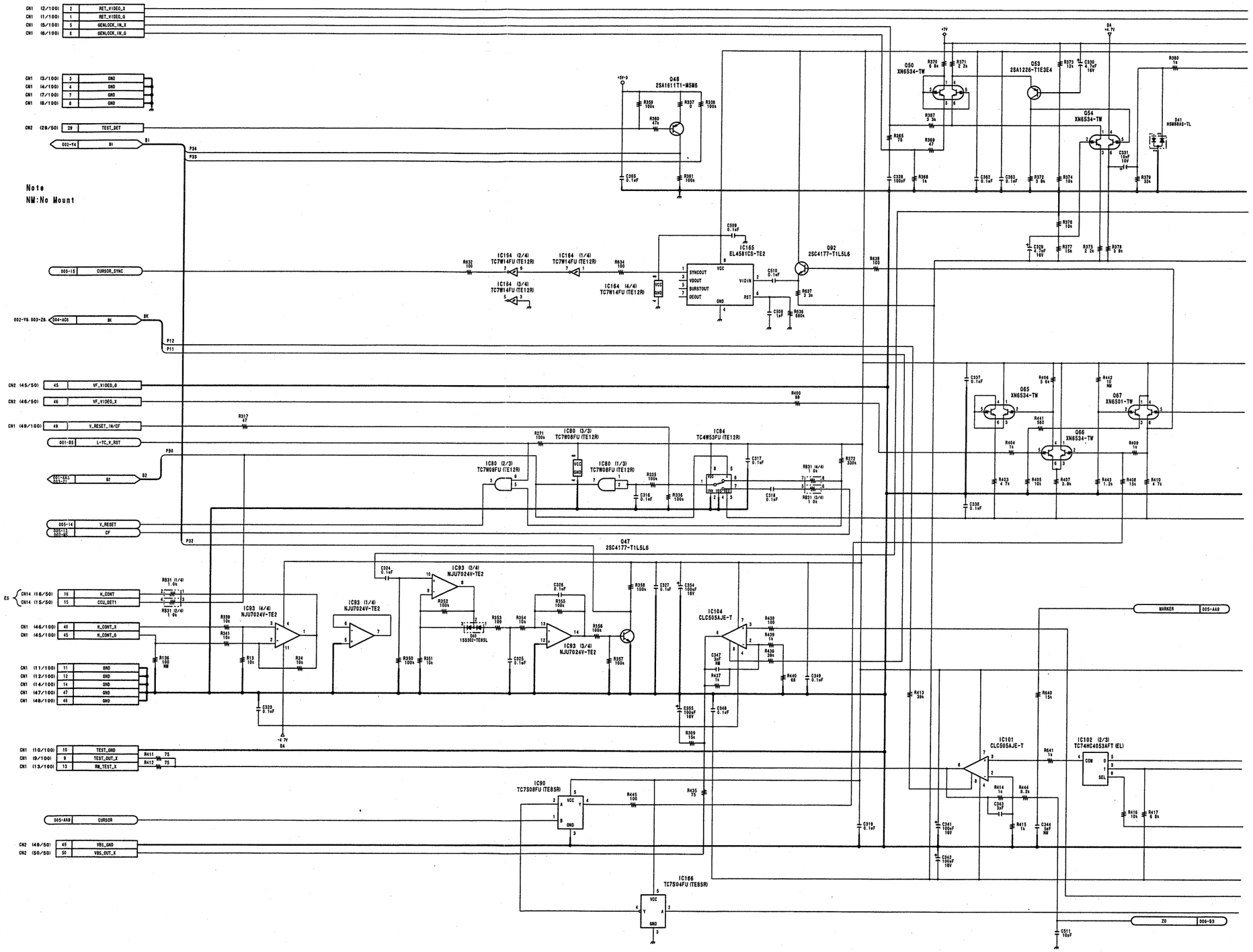
Note
NM:No Mount
Q48 2SA1611T1-M5M6
Q50 XN6534-TW
Q53 2SA1226-T1E3E4
Q54 XN6534-TW
D41 HSM88AS-TL
Q92 2SC4177-T1L5L6
IC154 (2/4) TC7W14FU (TE12R)
IC164 (1/4) TC7W14FU (TE12R)
IC164 (3/4) TC7W14FU (TE12R)
IC164 (4/4) TC7W14FU (TE12R)
IC165 EL4581CS-TE2
Q47 2SC4177-T1L5L6
IC80 (3/3) TC7W08FU (TE12R)
IC80 (2/3) TC7W08FU (TE12R)
IC80 (1/3) TC7W08FU (TE12R)
IC84 TC4W53FU (TE12R)
IC93 (2/4) NJU7024V-TE2
IC93 (1/4) NJU7024V-TE2
IC93 (4/4) NJU7024V-TE2
IC93 (3/4) NJU7024V-TE2
D42 1SS352-TE85L
IC104 CLC505AJE-T
IC101 CLC505AJE-T
IC102 (2/3) TC74HC4053AFT (EL)
IC90 TC7S08FU (TE85R)
IC166 TC7S04FU (TE85R)
Q65 XN6534-TW
Q66 XN6534-TW
Q67 XN6501-TW
CN1 (2/100) 2 RET_VIDEO_X
CN1 (1/100) 1 RET_VIDEO_G
CN1 (5/100) 5 GENLOCK_IN_X
CN1 (6/100) 6 GENLOCK_IN_G
CN1 (3/100) 3 GND
CN1 (4/100) 4 GND
CN1 (7/100) 7 GND
CN1 (8/100) 8 GND
CN2 (29/50) 29 TEST_DET
005-15 CURSOR_SYNC
002-Y8, 003-Z8 004-AC6 BK
CN2 (45/50) 45 VF_VIDEO_G
CN2 (46/50) 46 VF_VIDEO_X
CN1 (49/100) 49 V_RESET_IN/CF
001-B5 L-TC_V_RST
001-E5/C5, 003-Z1 B2
005-14 V_RESET
005-13, 007-B5 CF
CN14 (16/50) 16 H_CONT
CN14 (15/50) 15 COL_DET1
CN1 (46/100) 46 H_CONT_X
CN1 (45/100) 45 H_CONT_G
CN1 (11/100) 11 GND
CN1 (12/100) 12 GND
CN1 (14/100) 14 GND
CN1 (47/100) 47 GND
CN1 (48/100) 48 GND
CN1 (10/100) 10 TEST_GND
CN1 (9/100) 9 TEST_OUT_X
CN1 (13/100) 13 RM_TEST_X
005-AA9 CURSOR
CN2 (49/50) 49 VBS_GND
CN2 (50/50) 50 VBS_OUT_X
MARKER 005-AA9
Z0 006-B3
P34
P33
P12
P11
P32
P30
+5V-3
+7V
-4.7V
0A

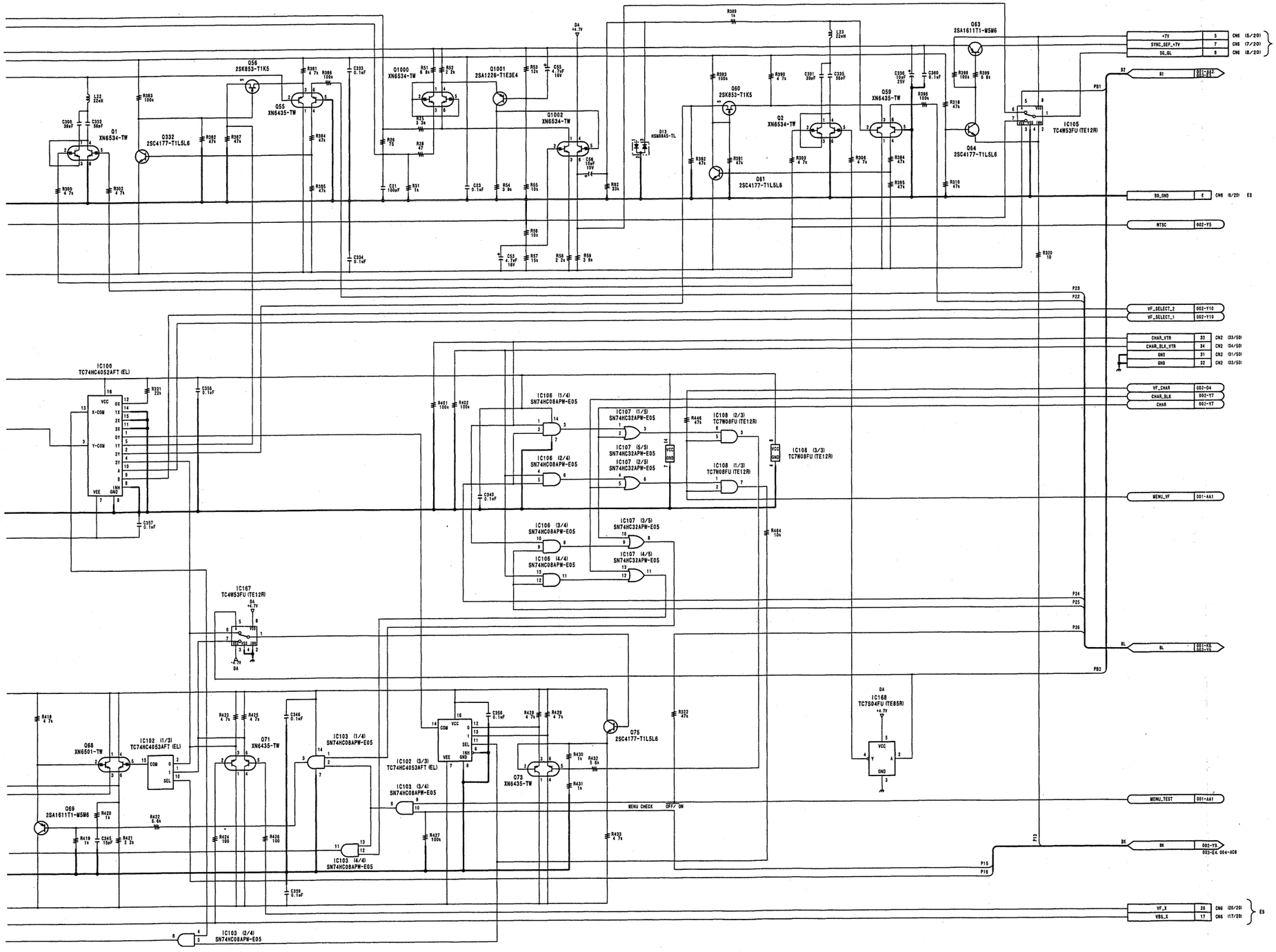

DCP-17 (3/8)
LOT NO. 810-

DCP-17 (4/8)

Note
NM:No Mount

4-26

MARK	CHANGED INFORMATION	SERIAL NO.
*1	C60 0.1uF → 0.22uF	10056 and higher (707 SY)
		30016 and higher (707 J/709WS J/ 790WS J)
		10141 and higher (709WS SY)
		10191 and higher (790WS SY)
		40226 and higher (707P)
		40346 and higher (709WSP)
		40611 and higher (790WSP)

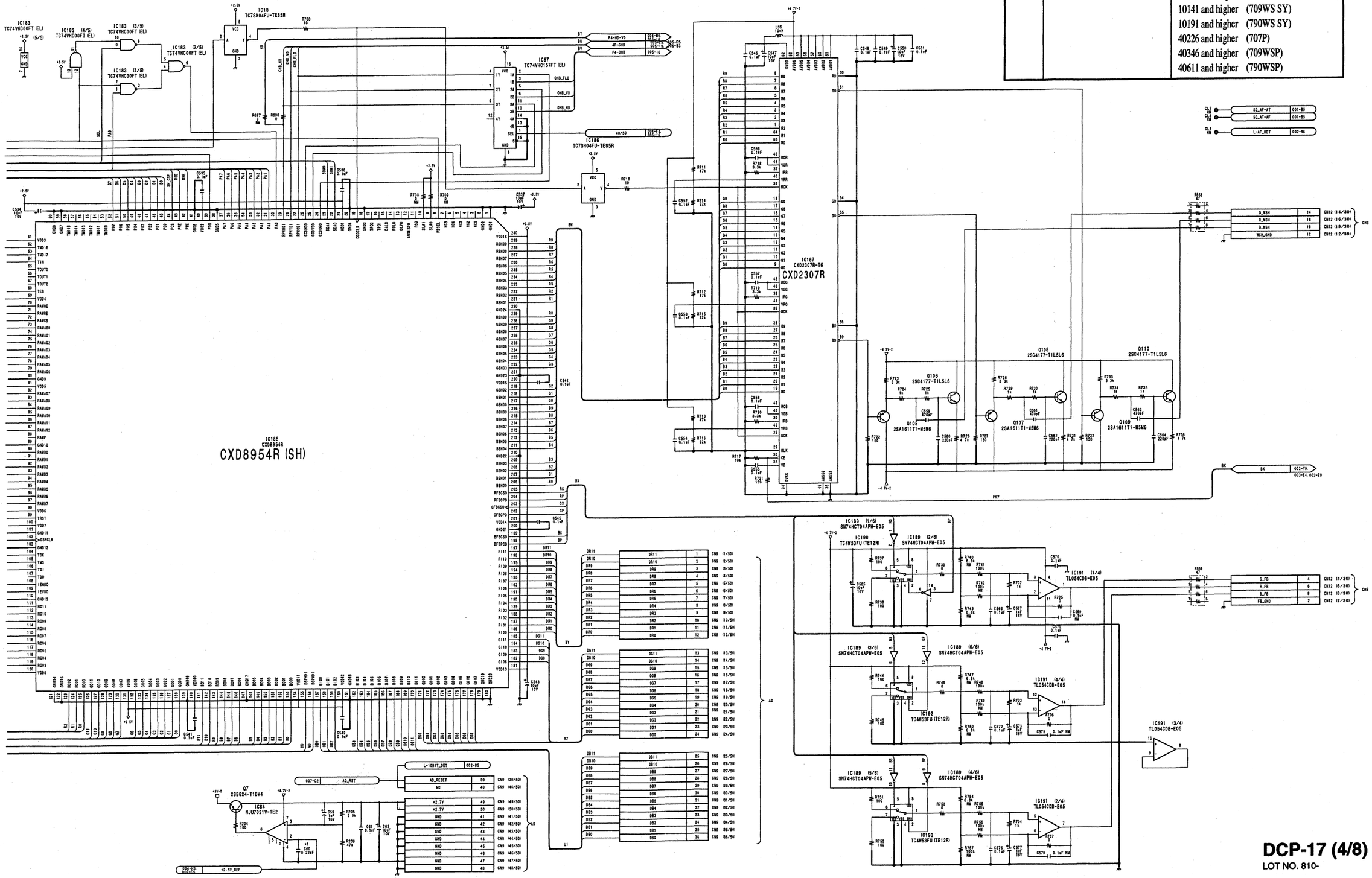

DCP-17 (4/8)
LOT NO. 810-

DVW-790WS/709WS/707
DVW-790WSP/709WSP/707P P2V2

DCP-17 (5/8)

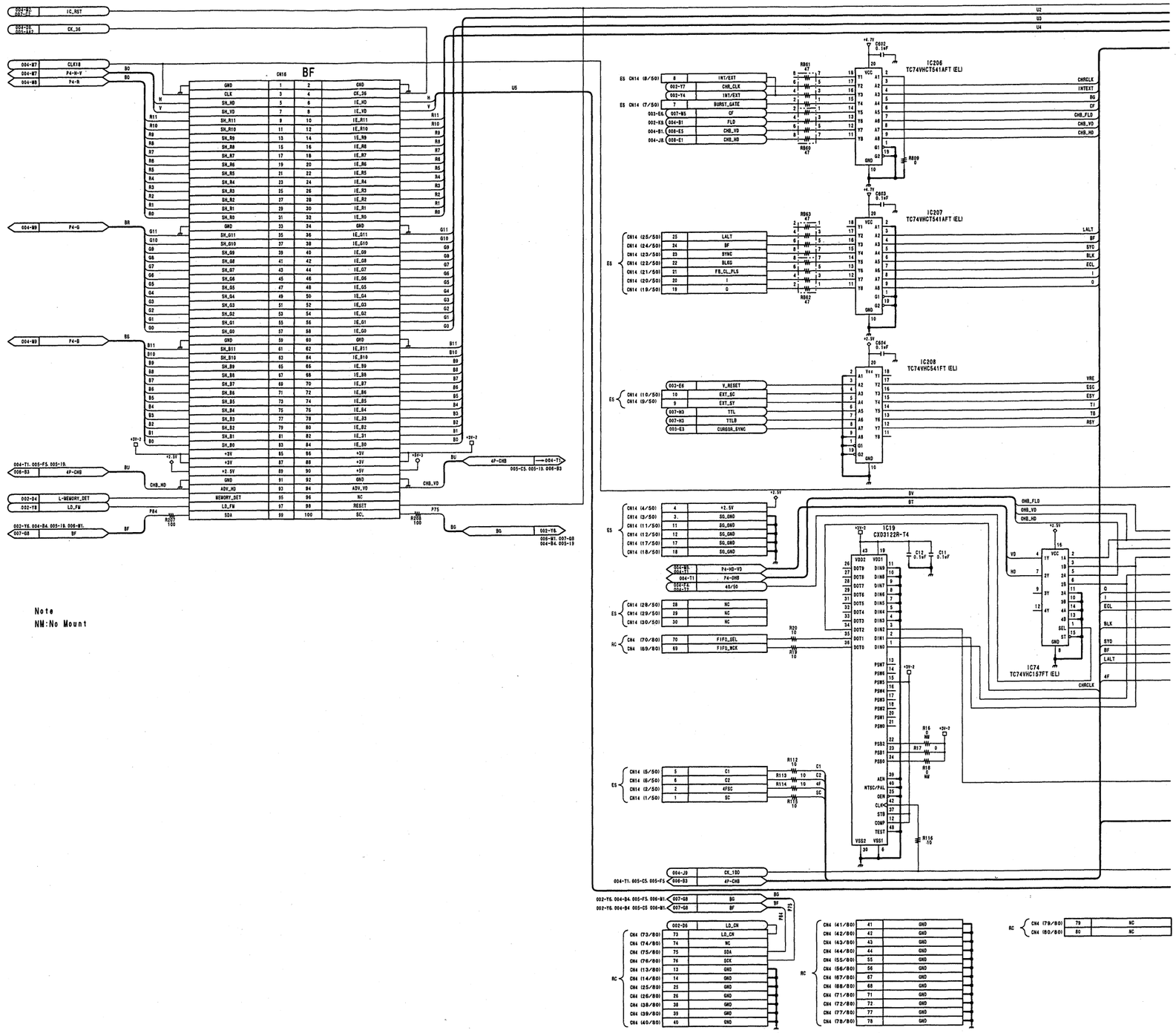

4-28

DVW-790WS/709WS/707
DVW-790WSP/709WSP/707P P2V2

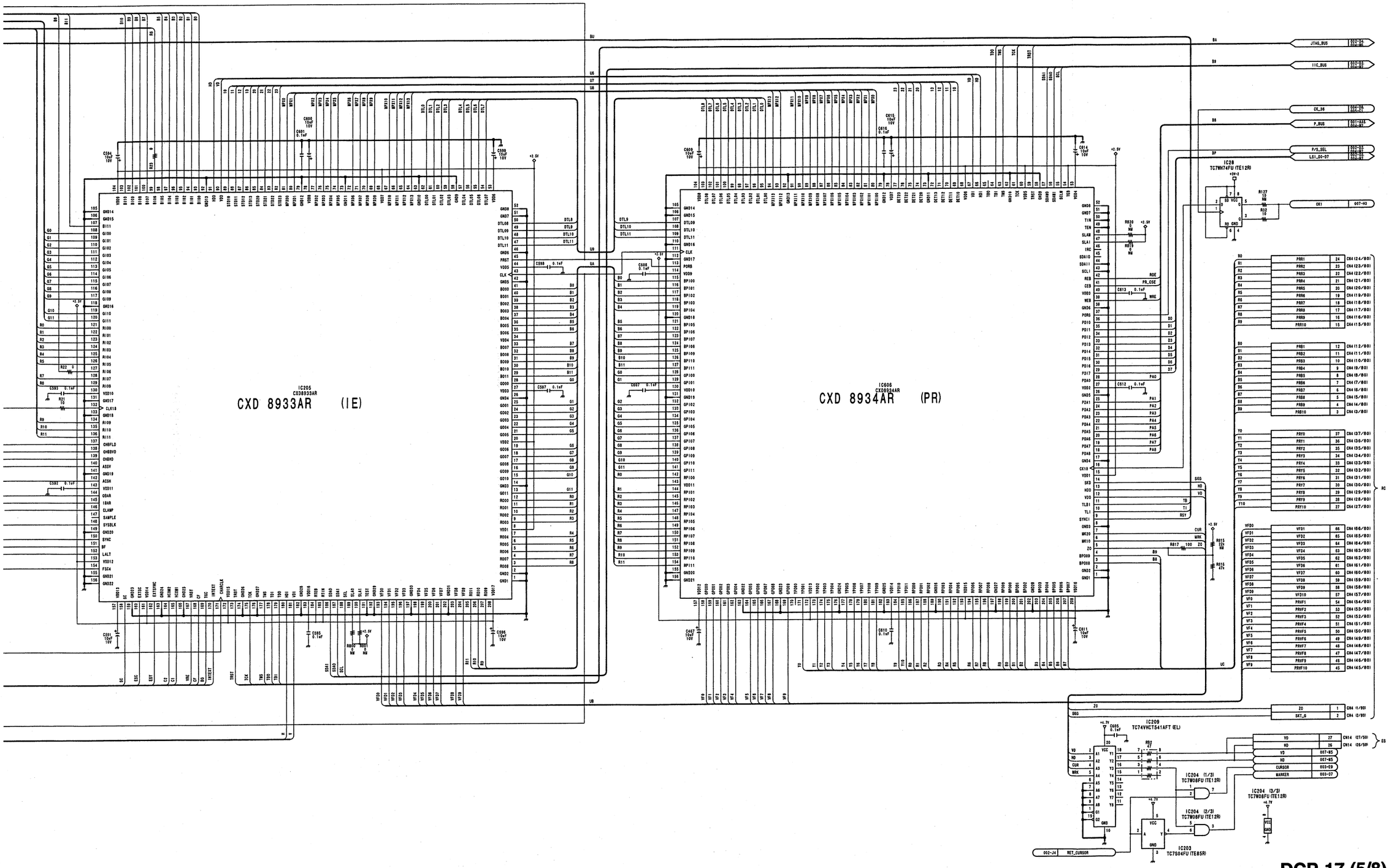

DCP-17 (5/8)
LOT NO. 810-

DCP-17 (6/8)

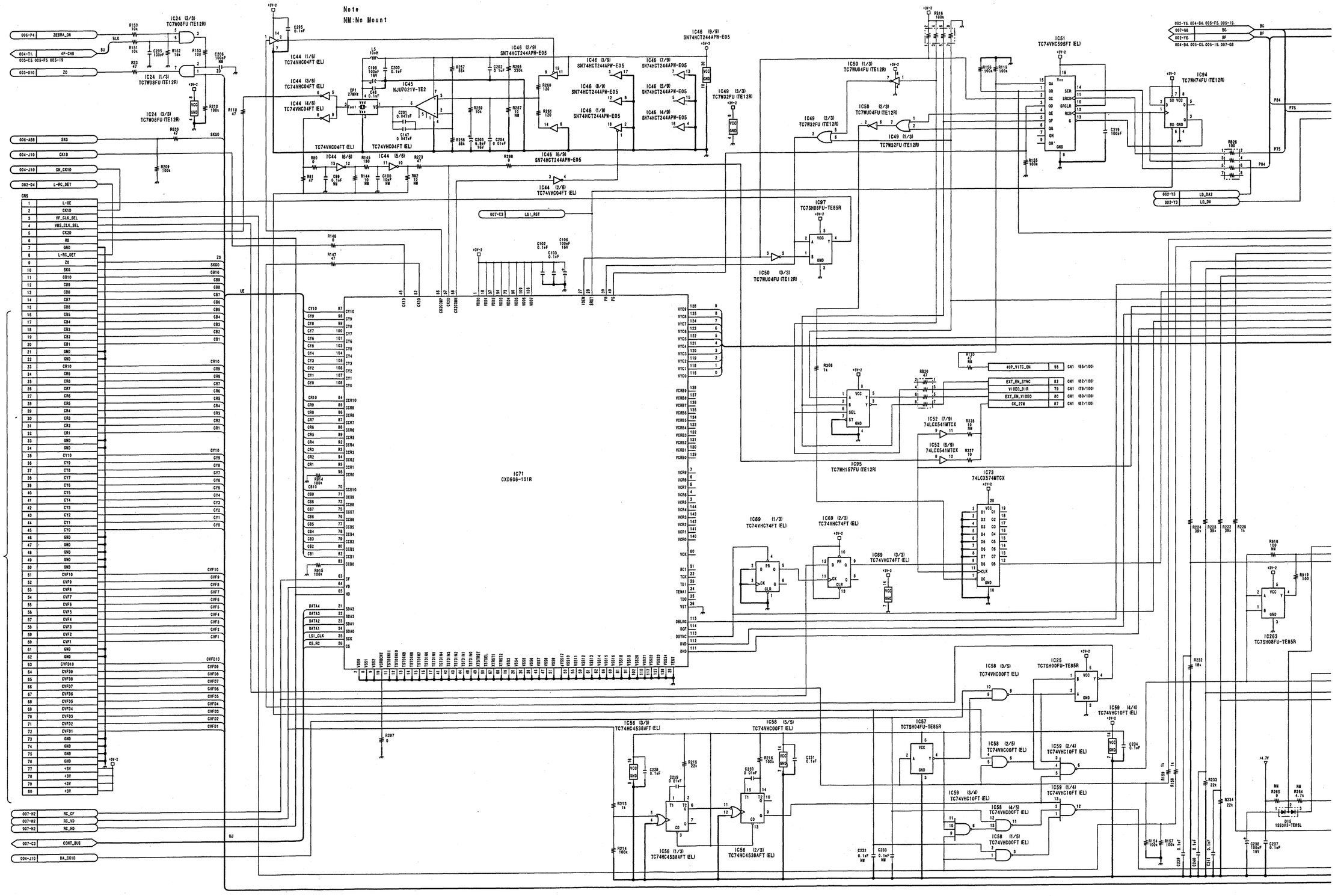
Note
NM:No Mount
IC71
CXD8608-101R
IC44 (1/8) TC74VHC04FT (EL)
IC44 (2/8) TC74VHC04FT (EL)
IC44 (3/8) TC74VHC04FT (EL)
IC44 (4/8) TC74VHC04FT (EL)
IC44 (5/8) TC74VHC04FT (EL)
IC44 (6/8) TC74VHC04FT (EL)
IC45 NJU7021V-TE2
IC46 (1/9) SN74HCT244APW-E05
IC46 (2/9) SN74HCT244APW-E05
IC46 (3/9) SN74HCT244APW-E05
IC46 (4/9) SN74HCT244APW-E05
IC46 (5/9) SN74HCT244APW-E05
IC46 (6/9) SN74HCT244APW-E05
IC46 (7/9) SN74HCT244APW-E05
IC46 (8/9) SN74HCT244APW-E05
IC46 (9/9) SN74HCT244APW-E05
IC49 (1/3) TC7W32FU (TE12R)
IC49 (2/3) TC7W32FU (TE12R)
IC49 (3/3) TC7W32FU (TE12R)
IC50 (1/3) TC7WU04FU (TE12R)
IC50 (2/3) TC7WU04FU (TE12R)
IC50 (3/3) TC7WU04FU (TE12R)
IC51 TC74VHC595FT (EL)
IC94 TC7WH74FU (TE12R)
IC97 TC7SH08FU-TE85R
IC24 (1/3) TC7W08FU (TE12R)
IC24 (2/3) TC7W08FU (TE12R)
IC24 (3/3) TC7W08FU (TE12R)
IC95 TC7WH157FU (TE12R)
IC52 (7/9) 74LCX541MTCX
IC52 (6/9) 74LCX541MTCX
IC73 74LCX574MTCX
IC69 (1/3) TC74VHC74FT (EL)
IC69 (2/3) TC74VHC74FT (EL)
IC69 (3/3) TC74VHC74FT (EL)
IC263 TC7SH08FU-TE85R
IC25 TC7SH00FU-TE85R
IC58 (1/5) TC74VHC00FT (EL)
IC58 (2/5) TC74VHC00FT (EL)
IC58 (3/5) TC74VHC00FT (EL)
IC58 (4/5) TC74VHC00FT (EL)
IC58 (5/5) TC74VHC00FT (EL)
IC59 (1/4) TC74VHC10FT (EL)
IC59 (2/4) TC74VHC10FT (EL)
IC59 (3/4) TC74VHC10FT (EL)
IC59 (4/4) TC74VHC10FT (EL)
IC56 (1/3) TC74HC4538AFT (EL)
IC56 (2/3) TC74HC4538AFT (EL)
IC56 (3/3) TC74HC4538AFT (EL)
IC57 TC7SH04FU-TE85R
D15 1SS302-TE85L
006-P4 ZEBRA_ON
004-T1 49-CH8
005-C5, 005-F5, 005-19
003-D10 ZO
006-AB8 SKG
004-J10 CK1D
004-J10 CK_CK1D
002-D4 L-RC_DET
007-C3 LS1_RST
007-H2 RC_CF
007-H2 RC_VD
007-H2 RC_HD
007-C2 CONT_BUS
004-J10 DA_CK1D
002-Y6, 004-B4, 005-F5, 005-19, 007-G8
007-G6
007-Y6
004-B4, 005-C5, 005-19, 007-G8
002-Y3 LD_DA2
002-Y3 LD_DA
40P_VITC_ON
EXT_EN_SYNC
VIDEO_DIR
EXT_EN_VIDEO
CK_27M
CN5
L-OE
CK1D
VF_CLK_SEL
VBS_CLK_SEL
CK20
HD
GND
L-RC_DET
ZO
SKGO
CB10
CB9
CB8
CB7
CB6
CB5
CB4
CB3
CB2
CB1
CR10
CR9
CR8
CR7
CR6
CR5
CR4
CR3
CR2
CR1
CY10
CY9
CY8
CY7
CY6
CY5
CY4
CY3
CY2
CY1
CY0
CVF10
CVF9
CVF8
CVF7
CVF6
CVF5
CVF4
CVF3
CVF2
CVF1
CVF01O
CVF09
CVF08
CVF07
CVF06
CVF05
CVF04
CVF03
CVF02
CVF01
+3V
+3V
+3V
+3V
+3V-2
+3V-3
VCC
GND
RC
UE
UJ

DCP-17 (6/8)

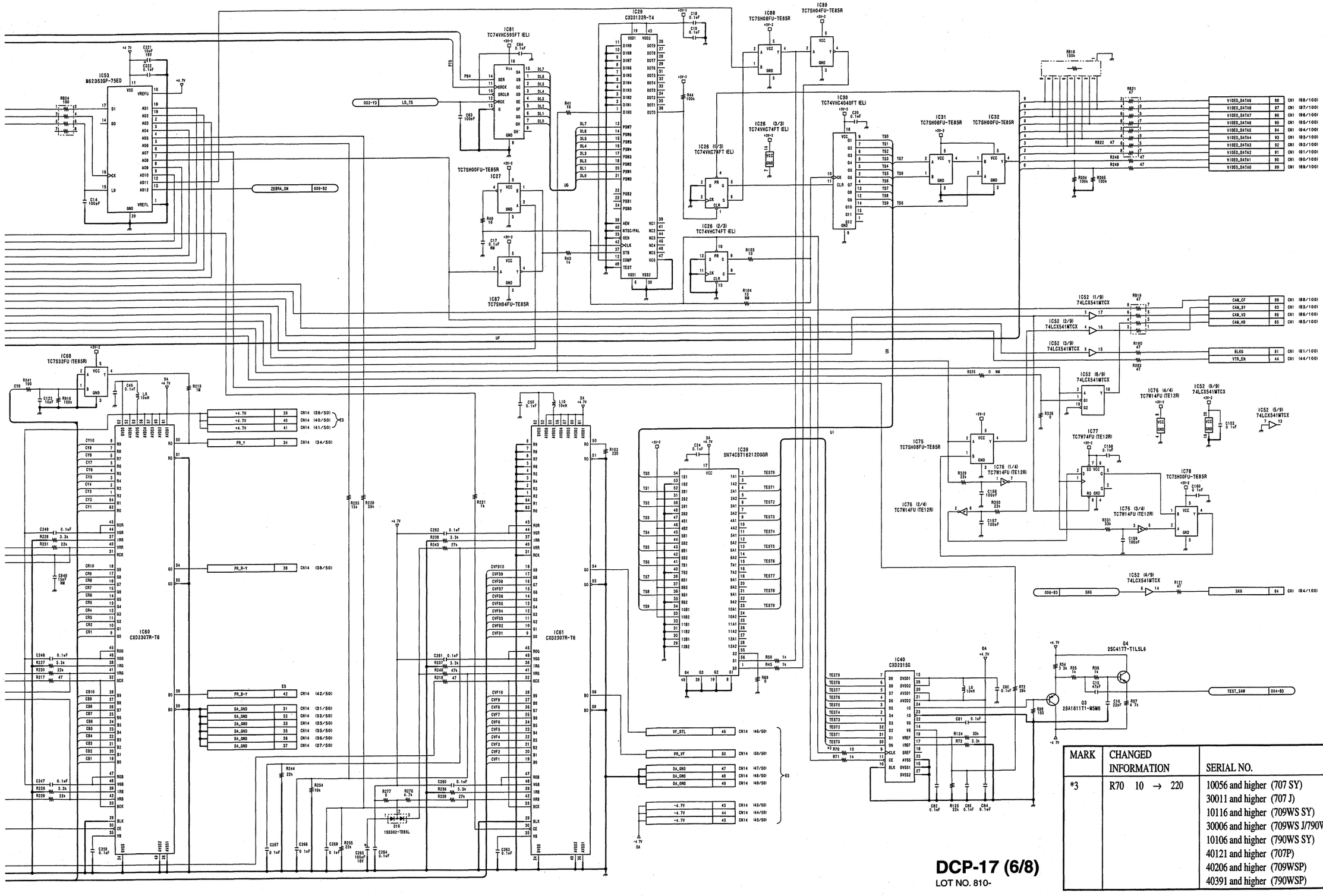

MARK	CHANGED INFORMATION	SERIAL NO.
*3	R70 10 → 220	10056 and higher (707 SY) 30011 and higher (707 J) 10116 and higher (709WS SY) 30006 and higher (709WS J/790WS J) 10106 and higher (790WS SY) 40121 and higher (707P) 40206 and higher (709WSP) 40391 and higher (790WSP)

DCP-17 (6/8)
LOT NO. 810-

DVW-790WS/709WS/707
DVW-790WSP/709WSP/707P P2V2

CI-21
LOT NO. 810-

ES-23/23P (2/2)

MARK	CHANGED INFORMATION	SERIAL NO.
*1	R482 1.0 → 10	10021 and higher (707 SY)
	IC38	30006 and higher (707 J/709WS J/790WS J)
	TC7S00FU-TE85R	10036 and higher (709WS SY/790WS SY)
	→ TC7SH00FU-TE85R	40036 and higher (707P)
	IC39	40101 and higher (709WSP)
	SN74HCT04APW(E05)	40086 and higher (790WSP)
	→ TC74VHCT04AFT(EL)	

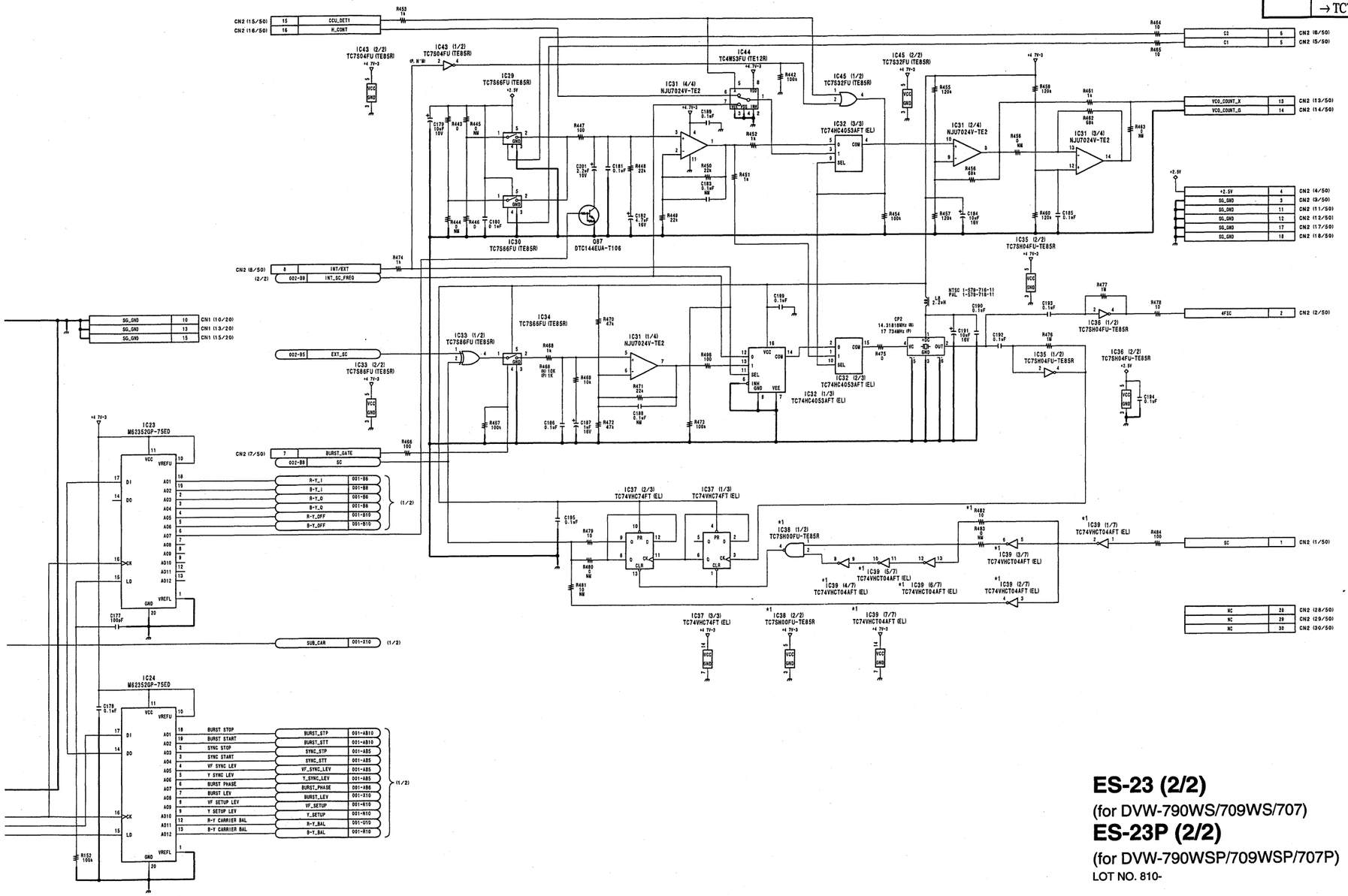

ES-23 (2/2)
(for DVW-790WS/709WS/707)
ES-23P (2/2)
(for DVW-790WSP/709WSP/707P)
LOT NO. 810-

ES-23/23P (2/2)

Notes
1. NM : No Mount
2. (N) : NTSC only
3. (P) : PAL only

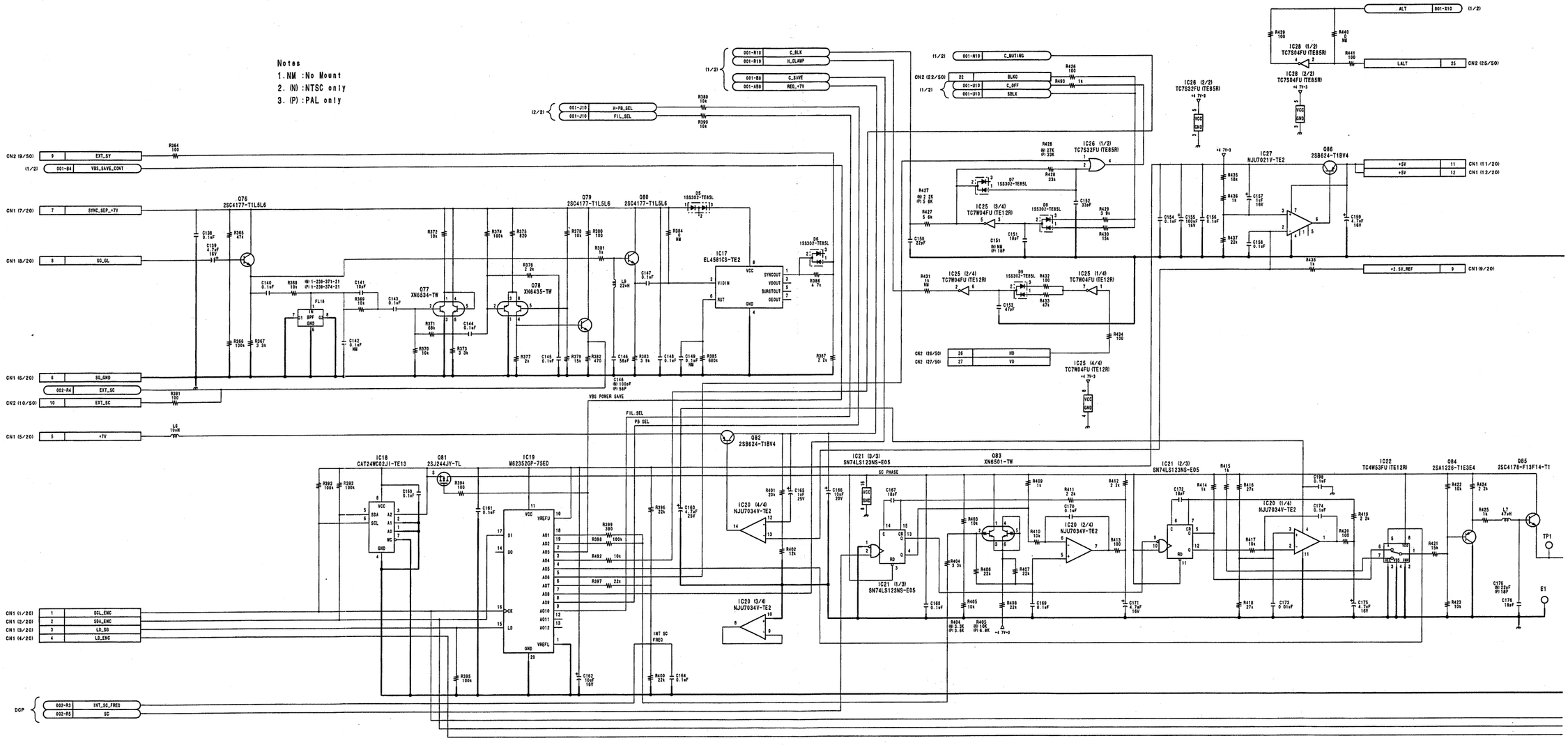

ES-23/23P (1/2)

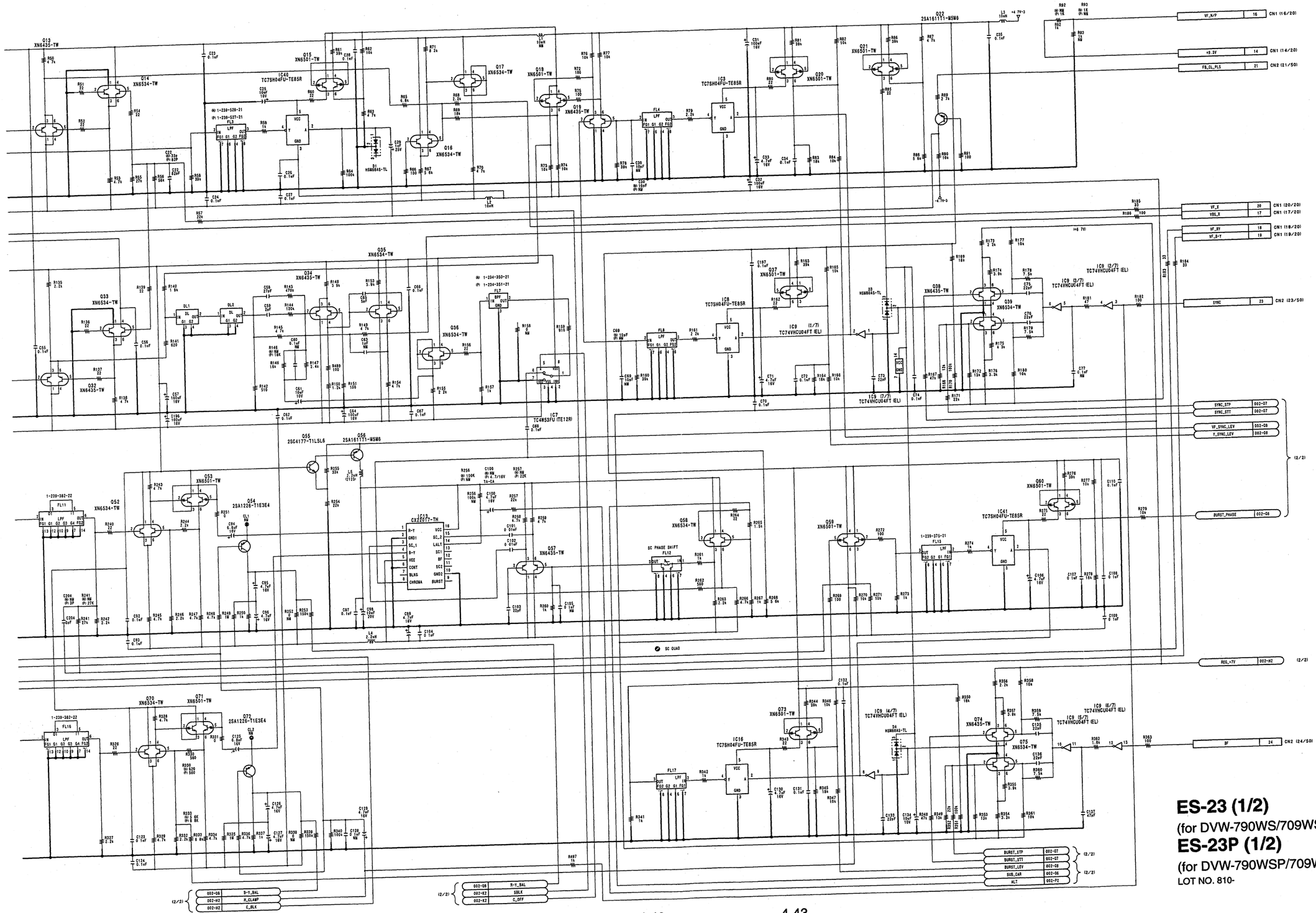

ES-23 (1/2)
(for DVW-790WS/709WS/707)
ES-23P (1/2)
(for DVW-790WSP/709WSP/707P)
LOT NO. 810-

DVW-790WS/709WS/707
DVW-790WSP/709WSP/707P P2V2

4-43 4-43

ES-23/23P (1/2)

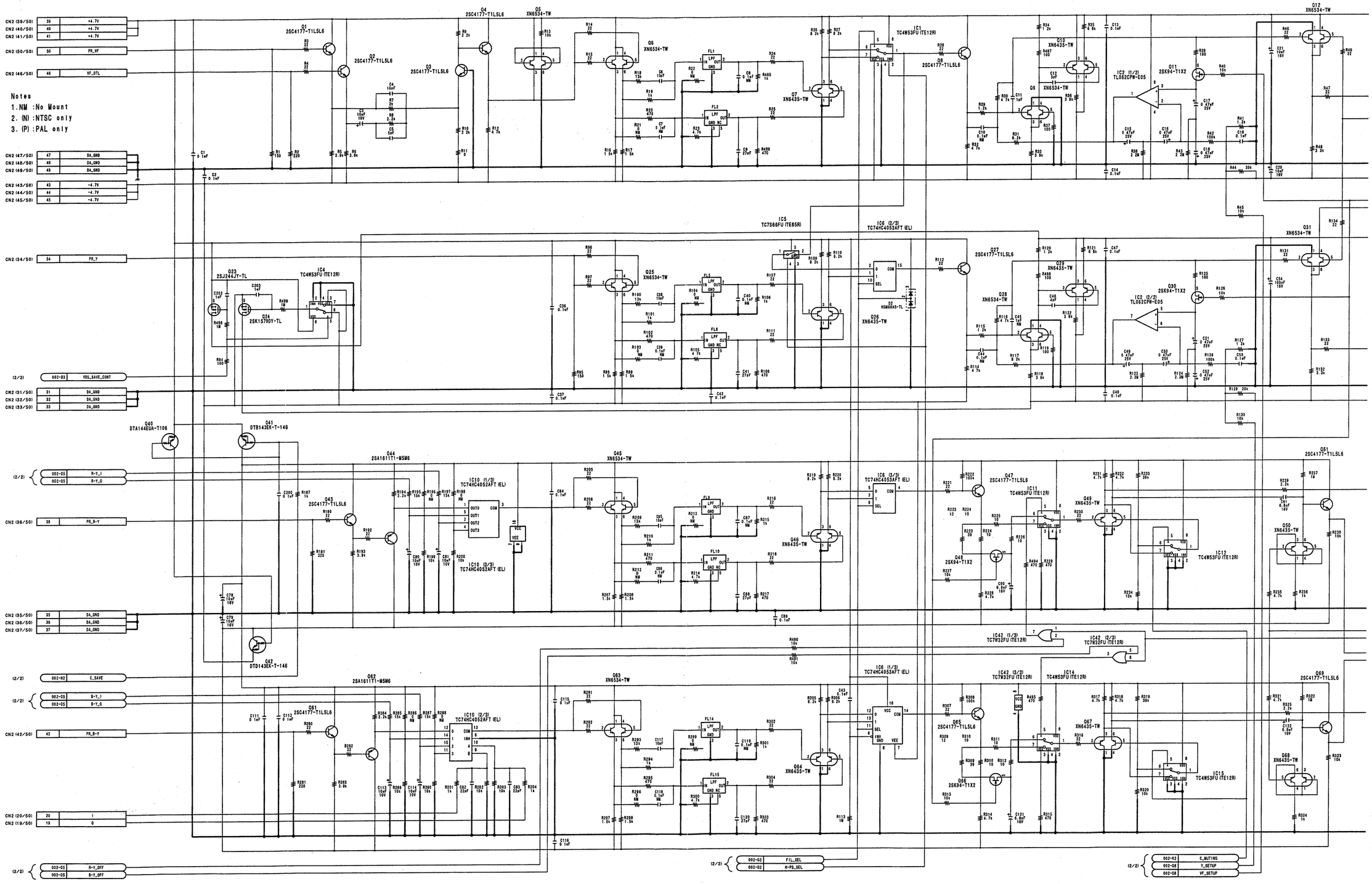

4-42

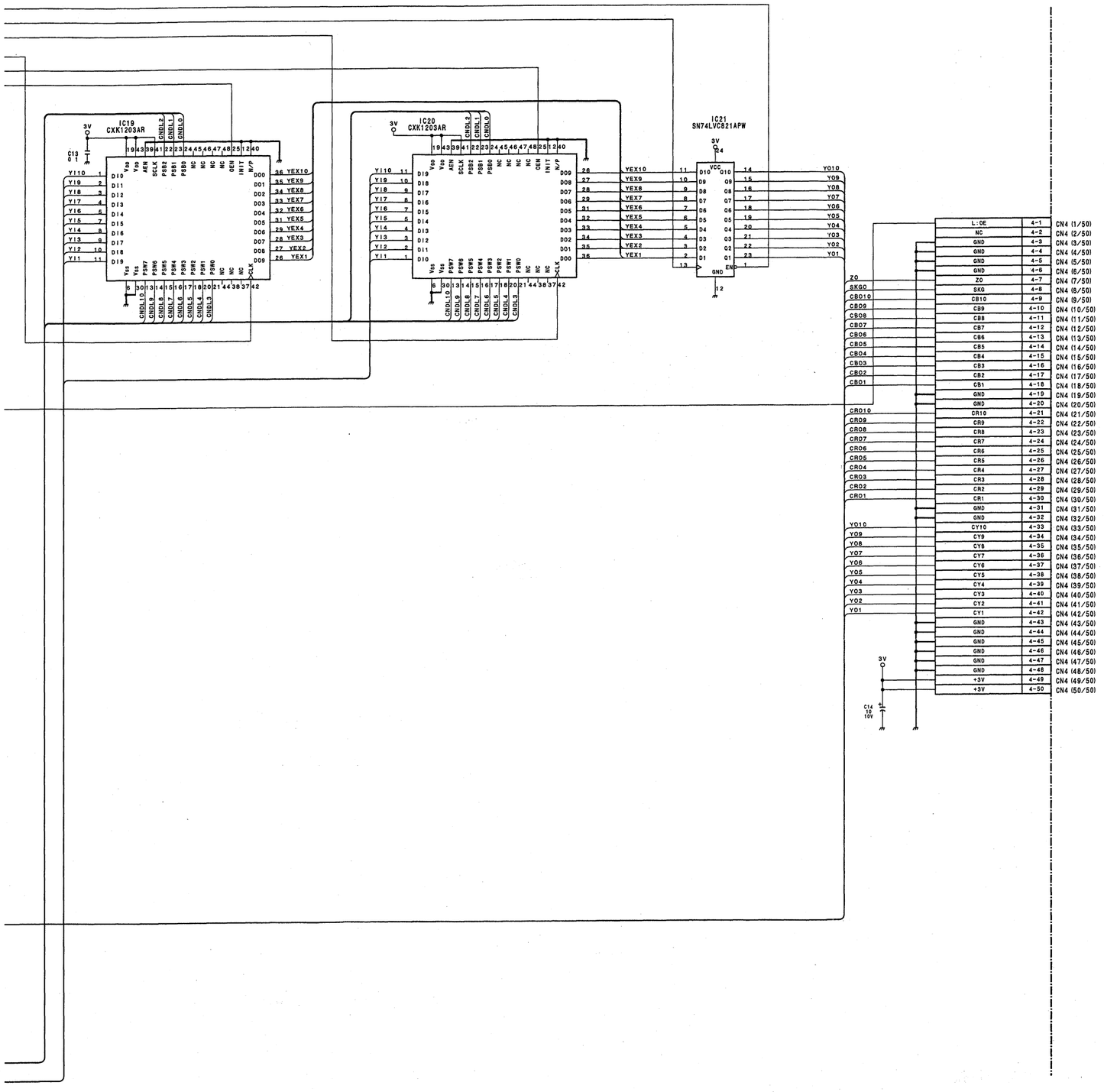

RC-75 (for DVW-790WS/790WSP/709WS/709WSP)
LOT NO. 810-

DVW-790WS/709WS/707
DVW-790WSP/709WSP/707P P2V2

4-41 4-41

Note
NM:No Mount

CN3 (1/50)	3-1	ZO	ZO
CN3 (2/50)	3-2	SKT G	SKTG
CN3 (3/50)	3-3	PRB10	CB10
CN3 (4/50)	3-4	PRB9	CB9
CN3 (5/50)	3-5	PRB8	CB8
CN3 (6/50)	3-6	PRB7	CB7
CN3 (7/50)	3-7	PRB6	CB6
CN3 (8/50)	3-8	PRB5	CB5
CN3 (9/50)	3-9	PRB4	CB4
CN3 (10/50)	3-10	PRB3	CB3
CN3 (11/50)	3-11	PRB2	CB2
CN3 (12/50)	3-12	PRB1	CB1
CN3 (13/50)	3-13	GND	
CN3 (14/50)	3-14	GND	
CN3 (15/50)	3-15	PRR10	CR10
CN3 (16/50)	3-16	PRR9	CR9
CN3 (17/50)	3-17	PRR8	CR8
CN3 (18/50)	3-18	PRR7	CR7
CN3 (19/50)	3-19	PRR6	CR6
CN3 (20/50)	3-20	PRR5	CR5
CN3 (21/50)	3-21	PRR4	CR4
CN3 (22/50)	3-22	PRR3	CR3
CN3 (23/50)	3-23	PRR2	CR2
CN3 (24/50)	3-24	PRR1	CR1
CN3 (25/50)	3-25	GND	
CN3 (26/50)	3-26	GND	
CN3 (27/50)	3-27	PRY10	Y10
CN3 (28/50)	3-28	PRY9	Y9
CN3 (29/50)	3-29	PRY8	Y8
CN3 (30/50)	3-30	PRY7	Y7
CN3 (31/50)	3-31	PRY6	Y6
CN3 (32/50)	3-32	PRY5	Y5
CN3 (33/50)	3-33	PRY4	Y4
CN3 (34/50)	3-34	PRY3	Y3
CN3 (35/50)	3-35	PRY2	Y2
CN3 (36/50)	3-36	PRY1	Y1
CN3 (37/50)	3-37	GND	
CN3 (38/50)	3-38	GND	
CN3 (39/50)	3-39	LATCH CK1	LATCH CK1
CN3 (40/50)	3-40	LATCH CK2	LATCH CK2
CN3 (41/50)	3-41	OEN1	OEN1
CN3 (42/50)	3-42	OEN2	OEN2
CN3 (43/50)	3-43	DL CK1	DL CK1
CN3 (44/50)	3-44	DL CK2	DL CK2
CN3 (45/50)	3-45	GND	
CN3 (46/50)	3-46	GND	
CN3 (47/50)	3-47	H:LE	
CN3 (48/50)	3-48	LD	LD
CN3 (49/50)	3-49	SDA	SDA
CN3 (50/50)	3-50	SCK	SCK

LATCH CK1
LATCH CK2
DL CK2
DL CK1
OEN2
OEN1

IC1 TC74VHC573FT
IC2 TC74VHC573FT
IC3 TC74VHC573FT
IC4 TC74VHC573FT
IC5 TC74VHC595FT
IC6 TC74VHC595FT
IC7 CXK1203AR
IC8 CXK1203AR
IC9 CXK1203AR
IC10 CXK1203AR
IC11 CXK1203AR
IC12 CXK1203AR
IC13 CXK1203AR
IC14 CXK1203AR
IC15 SN74LVC821APW
IC16 SN74LVC821APW
IC17 SN74LVC821APW
IC18 SN74LVC821APW

SDA
LD
SCK

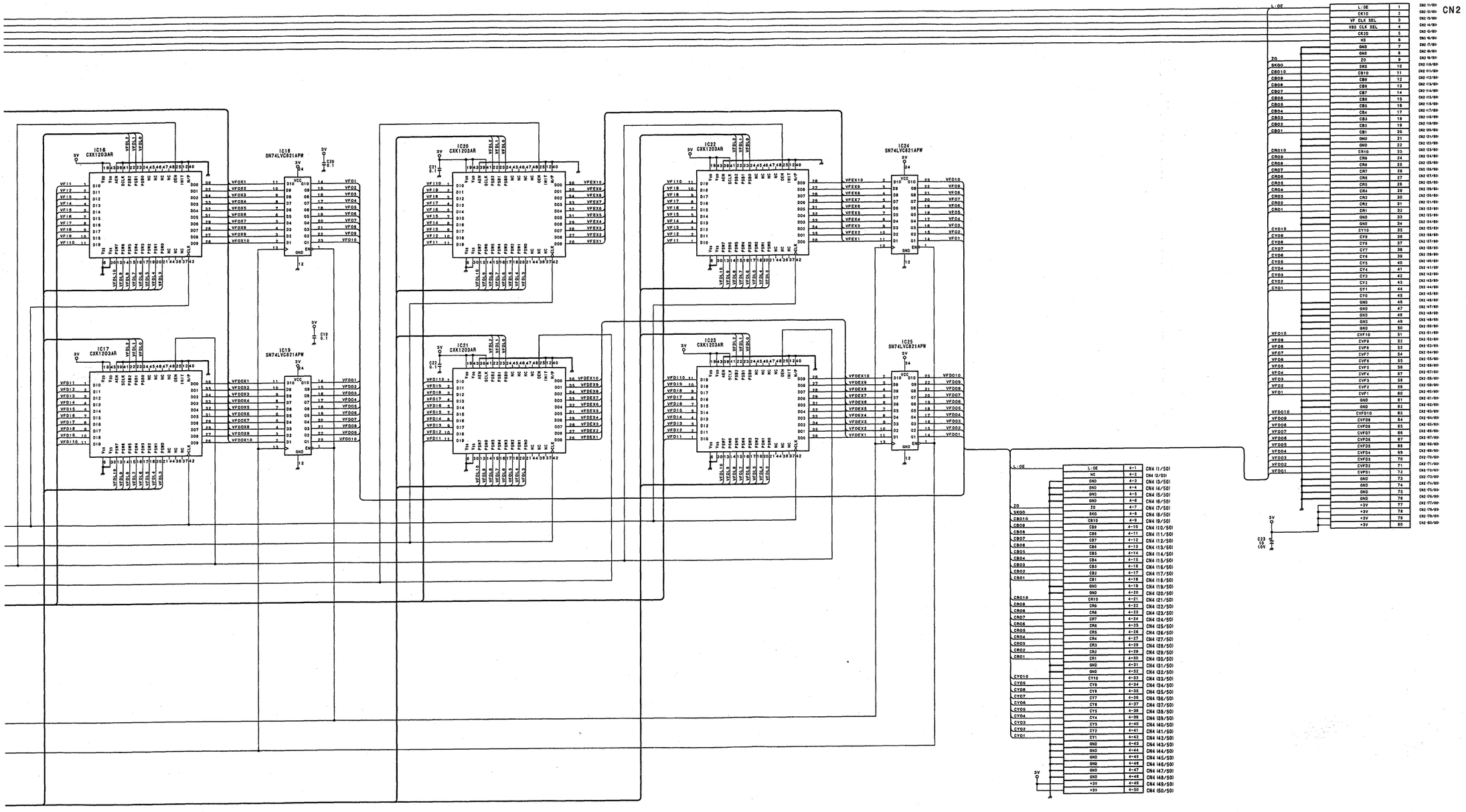

RC-69 (for DVW-790WS/790WSP/709WS/709WSP)
LOT NO. 810-

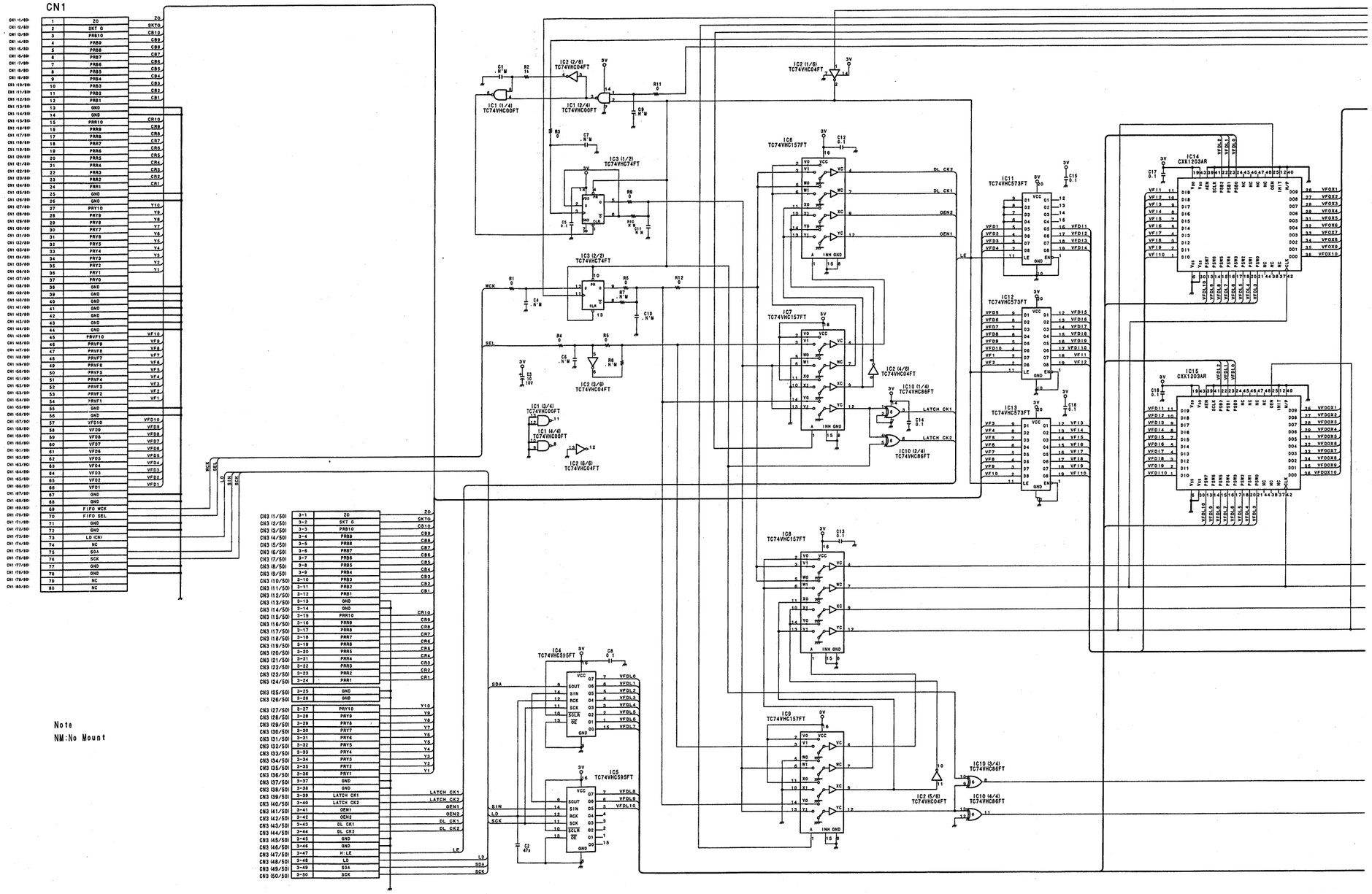
CN1
CN3
IC1 (1/4) TC74VHC00FT
IC1 (2/4) TC74VHC00FT
IC1 (3/4) TC74VHC00FT
IC1 (4/4) TC74VHC00FT
IC2 (1/6) TC74VHC04FT
IC2 (2/6) TC74VHC04FT
IC2 (3/6) TC74VHC04FT
IC2 (4/6) TC74VHC04FT
IC2 (5/6) TC74VHC04FT
IC2 (6/6) TC74VHC04FT
IC3 (1/2) TC74VHC74FT
IC3 (2/2) TC74VHC74FT
IC4 TC74VHC595FT
IC5 TC74VHC595FT
IC6 TC74VHC157FT
IC7 TC74VHC157FT
IC8 TC74VHC157FT
IC9 TC74VHC157FT
IC10 (1/4) TC74VHC86FT
IC10 (2/4) TC74VHC86FT
IC10 (3/4) TC74VHC86FT
IC10 (4/4) TC74VHC86FT
IC11 TC74VHC573FT
IC12 TC74VHC573FT
IC13 TC74VHC573FT
IC14 CXK1203AR
IC15 CXK1203AR
LATCH CK1
LATCH CK2
DL CK1
DL CK2
OEN1
OEN2
LE
LD
SDA
SCK
WCK
SEL
SIN
Note
NM:No Mount

CN1 (1/100)	1	GND	GND	2	CN1 (2/100)
CN1 (3/100)	3	CLK_18/14	NC	4	CN1 (4/100)
CN1 (5/100)	5	SH_HD	IE_HD	6	CN1 (6/100)
CN1 (7/100)	7	SH_VD	IE_VD	8	CN1 (8/100)
CN1 (9/100)	9	SH_R11	IE_R11	10	CN1 (10/100)
CN1 (11/100)	11	SH_R10	IE_R10	12	CN1 (12/100)
CN1 (13/100)	13	SH_R9	IE_R9	14	CN1 (14/100)
CN1 (15/100)	15	SH_R8	IE_R8	16	CN1 (16/100)
CN1 (17/100)	17	SH_R7	IE_R7	18	CN1 (18/100)
CN1 (19/100)	19	SH_R6	IE_R6	20	CN1 (20/100)
CN1 (21/100)	21	SH_R5	IE_R5	22	CN1 (22/100)
CN1 (23/100)	23	SH_R4	IE_R4	24	CN1 (24/100)
CN1 (25/100)	25	SH_R3	IE_R3	26	CN1 (26/100)
CN1 (27/100)	27	SH_R2	IE_R2	28	CN1 (28/100)
CN1 (29/100)	29	SH_R1	IE_R1	30	CN1 (30/100)
CN1 (31/100)	31	SH_R0	IE_R0	32	CN1 (32/100)
CN1 (33/100)	33	GND	GND	34	CN1 (34/100)
CN1 (35/100)	35	SH_G11	IE_G11	36	CN1 (36/100)
CN1 (37/100)	37	SH_G10	IE_G10	38	CN1 (38/100)
CN1 (39/100)	39	SH_G9	IE_G9	40	CN1 (40/100)
CN1 (41/100)	41	SH_G8	IE_G8	42	CN1 (42/100)
CN1 (43/100)	43	SH_G7	IE_G7	44	CN1 (44/100)
CN1 (45/100)	45	SH_G6	IE_G6	46	CN1 (46/100)
CN1 (47/100)	47	SH_G5	IE_G5	48	CN1 (48/100)
CN1 (49/100)	49	SH_G4	IE_G4	50	CN1 (50/100)
CN1 (51/100)	51	SH_G3	IE_G3	52	CN1 (52/100)
CN1 (53/100)	53	SH_G2	IE_G2	54	CN1 (54/100)
CN1 (55/100)	55	SH_G1	IE_G1	56	CN1 (56/100)
CN1 (57/100)	57	SH_G0	IE_G0	58	CN1 (58/100)
CN1 (59/100)	59	GND	GND	60	CN1 (60/100)
CN1 (61/100)	61	SH_B11	IE_B11	62	CN1 (62/100)
CN1 (63/100)	63	SH_B10	IE_B10	64	CN1 (64/100)
CN1 (65/100)	65	SH_B9	IE_B9	66	CN1 (66/100)
CN1 (67/100)	67	SH_B8	IE_B8	68	CN1 (68/100)
CN1 (69/100)	69	SH_B7	IE_B7	70	CN1 (70/100)
CN1 (71/100)	71	SH_B6	IE_B6	72	CN1 (72/100)
CN1 (73/100)	73	SH_B5	IE_B5	74	CN1 (74/100)
CN1 (75/100)	75	SH_B4	IE_B4	76	CN1 (76/100)
CN1 (77/100)	77	SH_B3	IE_B3	78	CN1 (78/100)
CN1 (79/100)	79	SH_B2	IE_B2	80	CN1 (80/100)
CN1 (81/100)	81	SH_B1	IE_B1	82	CN1 (82/100)
CN1 (83/100)	83	SH_B0	IE_B0	84	CN1 (84/100)
CN1 (85/100)	85	+3V	+3V	86	CN1 (86/100)
CN1 (87/100)	87	+3V	+3V	88	CN1 (88/100)
CN1 (89/100)	89	+2.5V	+5V	90	CN1 (90/100)
CN1 (91/100)	91	GND	GND	92	CN1 (92/100)
CN1 (93/100)	93	ADV_HD	ADV_VD	94	CN1 (94/100)
CN1 (95/100)	95	MEMORY_DET	NC	96	CN1 (96/100)
CN1 (97/100)	97	LD_FW	RESET	98	CN1 (98/100)
CN1 (99/100)	99	SDA	SCL	100	CN1 (100/100)

Note
NM:No Mount

BF-74
LOT NO. 810-

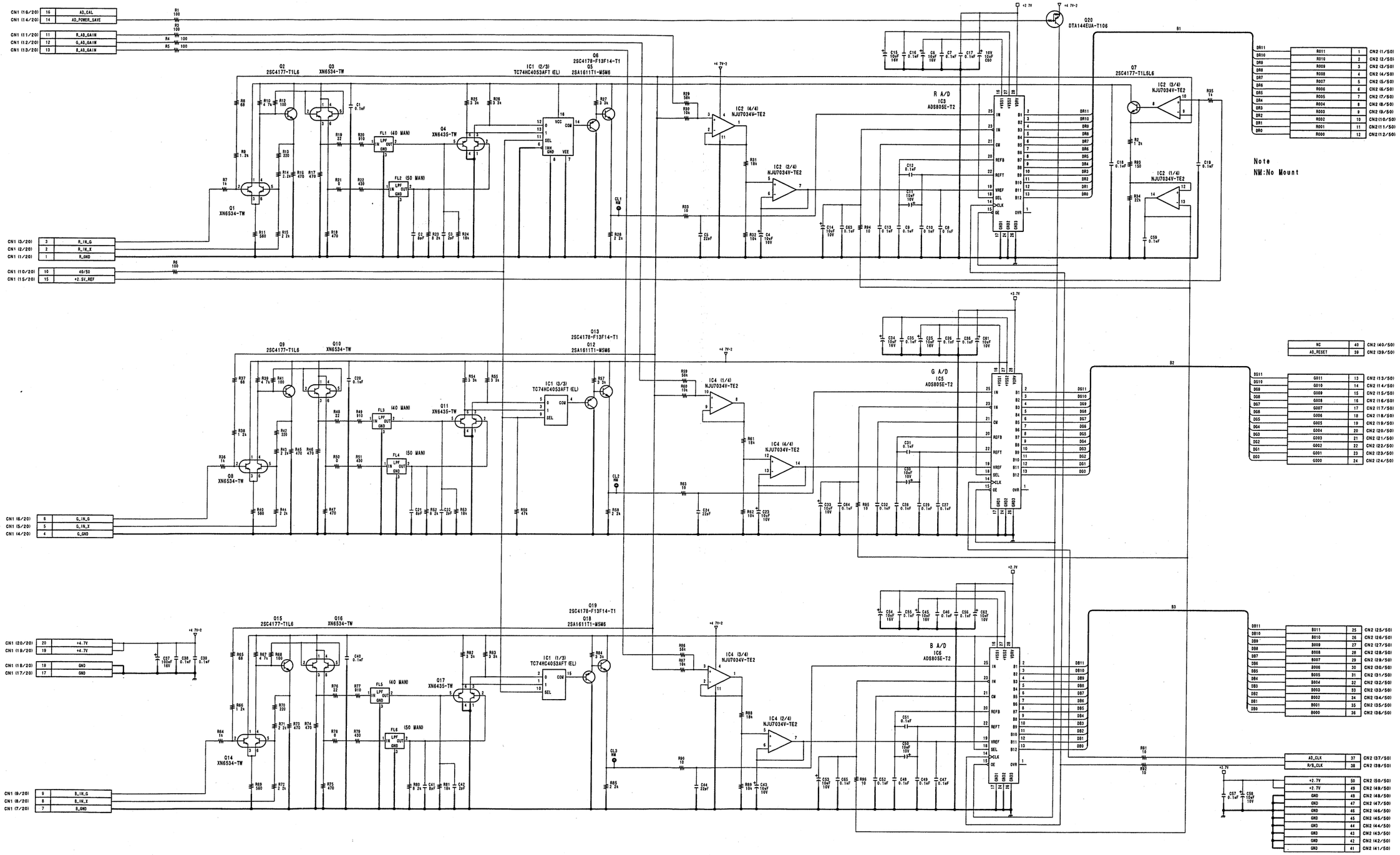

AD-155
LOT NO. 810-

DVW-790WS/709WS/707
DVW-790WSP/709WSP/707P P2V2

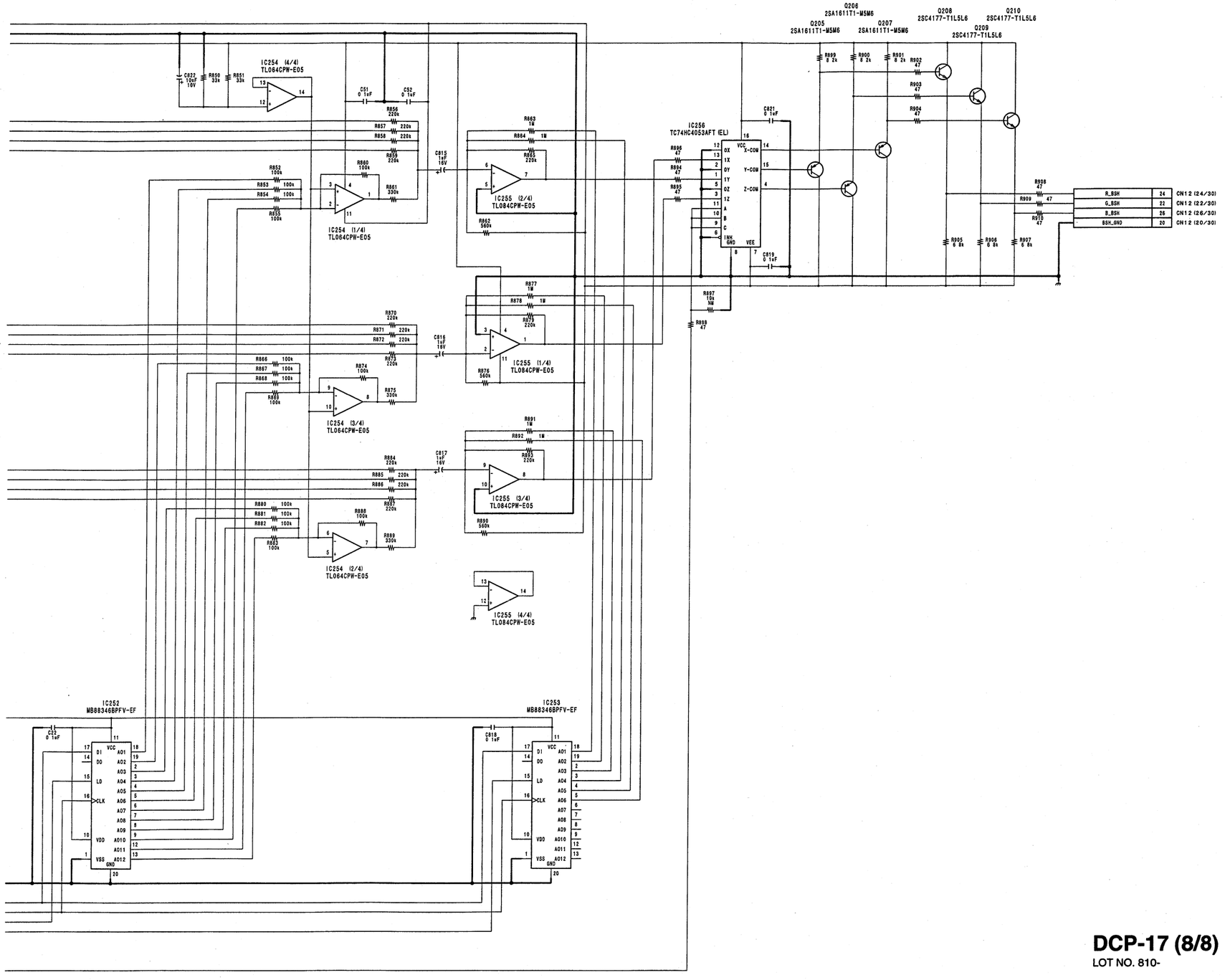

DCP-17 (8/8)
LOT NO. 810-

Note
NM:No Mount

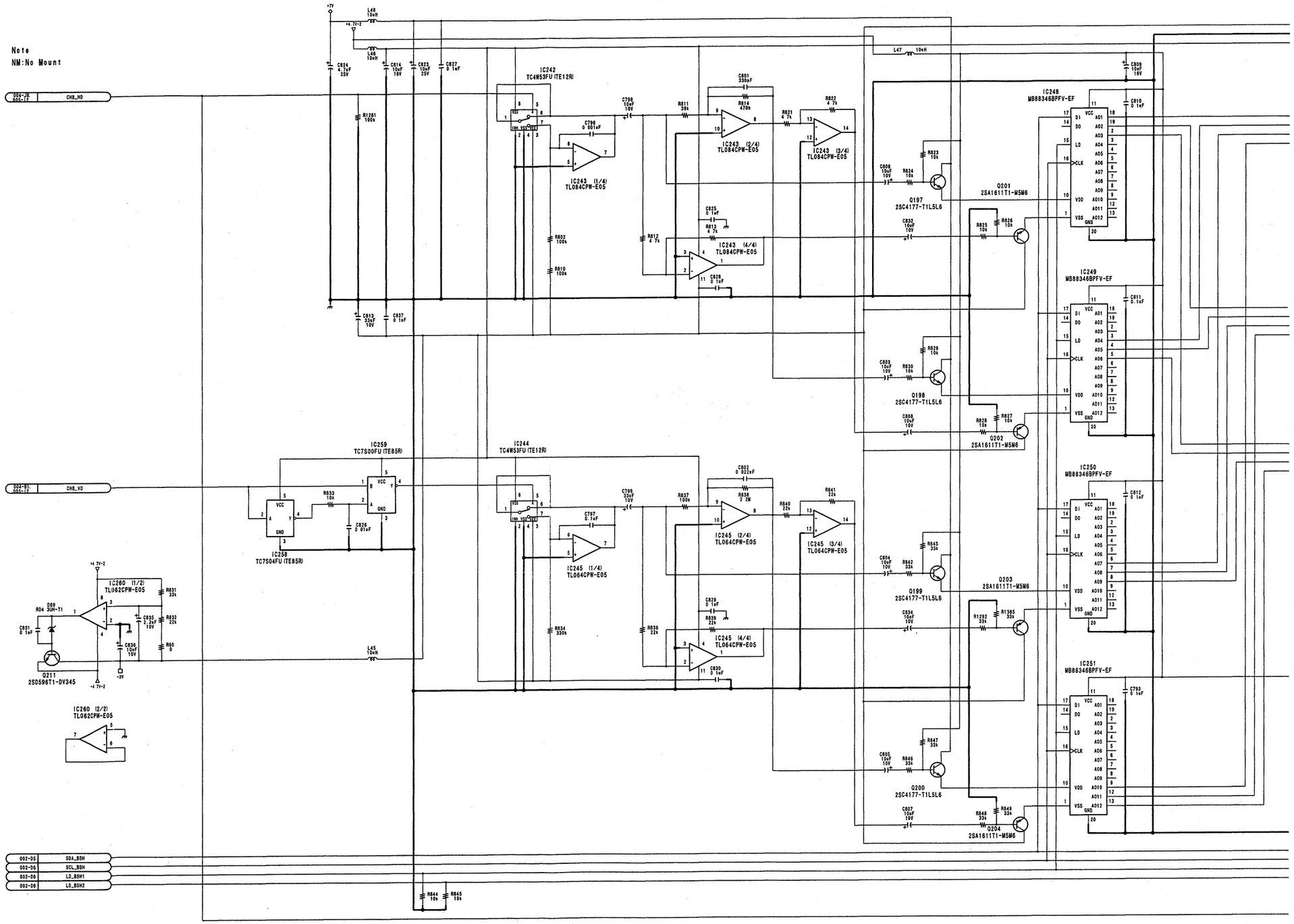

DCP-17 (7/8)

Note
NM:No Mount

IC5 TC7S14FU (TE85R)
IC33 (4/4) TC7W14FU (TE12R)
IC33 (1/4) TC7W14FU (TE12R)
IC33 (3/4) TC7W14FU (TE12R)
IC33 (2/4) TC7W14FU (TE12R)
D6 HSM88WA-TL
IC34 REF-03GSR
IC35 (1/4) TL064CPW-E05
IC35 (2/4) TL064CPW-E05
IC35 (3/4) TL064CPW-E05
IC35 (4/4) TL064CPW-E05
Q23 2SB1114-T1ZLZK
Q24 2SB1440S-TX
Q25 2SD596T1-DV345
D5 RD4 3UH-T1
D7 1SS301-TE85L
D8 RD4 3UH-T1
D9 RD4 3UH-T1
D10 1SS301-TE85L

IC55 (2/9) SN74HCT541APW-E05
IC55 (5/9) SN74HCT541APW-E05
IC55 (3/9) SN74HCT541APW-E05
IC55 (4/9) SN74HCT541APW-E05
IC55 (9/9) SN74HCT541APW-E05
IC79 (3/3) TC74VHC74FT (EL)
IC62 TC74VHC574FT (EL)
IC55 (6/9) SN74HCT541APW-E05
IC55 (7/9) SN74HCT541APW-E05
IC55 (1/9) SN74HCT541APW-E05
IC55 (8/9) SN74HCT541APW-E05
IC79 (1/3) TC74VHC74FT (EL)
IC79 (2/3) TC74VHC74FT (EL)

004-M2 005-P1	IC_RST
004-R9	AD_RST
006-G3	LSI_RST
006-B12	CONT_BUS
004-H5 004-D10	+2.5V_REF
L-RESET	001-B1
006-B11	RC_CF
006-B11	RC_HD
006-B11	RC_VD
005-14	TTLB
005-14	TTL
005-AA3	CK1
002-Y7	TITLE_BLK
002-Y7	TITLE
002-Y7 004-H3	SG_VD
002-Y7	SG_HD

CN1 (15/100)	15	NC
CN1 (16/100)	16	NC
CN1 (17/100)	17	NC
CN1 (18/100)	18	NC
CN1 (19/100)	19	NC
CN1 (20/100)	20	NC
CN1 (21/100)	21	NC
CN1 (22/100)	22	NC
CN1 (23/100)	23	NC
CN1 (24/100)	24	NC
CN1 (25/100)	25	NC
CN1 (26/100)	26	NC
CN1 (27/100)	27	NC
CN1 (28/100)	28	NC
CN1 (29/100)	29	NC
CN1 (30/100)	30	NC
CN1 (31/100)	31	NC
CN1 (32/100)	32	NC

+9.3V	39	CN1 (39/100)
+9.3V	40	CN1 (40/100)
-5V	51	CN1 (51/100)
-5V	52	CN1 (52/100)
-5V	53	CN1 (53/100)
-5V	54	CN1 (54/100)
+7V	41	CN1 (41/100)
+7V	42	CN1 (42/100)
+5V	35	CN1 (35/100)
+5V	36	CN1 (36/100)
+5V	37	CN1 (37/100)
+5V	38	CN1 (38/100)
+3V	69	CN1 (69/100)
+3V	70	CN1 (70/100)
+3V	71	CN1 (71/100)
+3V	72	CN1 (72/100)
+2.5V	61	CN1 (61/100)
+2.5V	62	CN1 (62/100)
+2.5V	63	CN1 (63/100)
+2.5V	64	CN1 (64/100)
VCO_CONT_X	12	CN13 (12/20)
VCO_CONT_G	11	CN13 (11/20)
VCO_CONT_X	13	CN14 (13/50)
VCO_CONT_G	14	CN14 (14/50)
+2.5V_REF	9	CN6 (9/20)
+5V	11	CN6 (11/20)
+5V	12	CN6 (12/20)
SG_GND	10	CN6 (10/20)
SG_GND	13	CN6 (13/20)
SG_GND	15	CN6 (15/20)
+9.3V	14	CN6 (14/20)
GND	65	CN1 (65/100)
GND	66	CN1 (66/100)
GND	67	CN1 (67/100)
GND	68	CN1 (68/100)
GND	73	CN1 (73/100)
GND	74	CN1 (74/100)
GND	75	CN1 (75/100)
GND	76	CN1 (76/100)
GND	77	CN1 (77/100)
GND	78	CN1 (78/100)
GND	99	CN1 (99/100)
GND	100	CN1 (100/100)

CF	002-E5 005-L2	
VD	005-AA9	
HD	005-AA8	

E1 E2

IC70 TC7SH32FU-TE85R
IC36 TC7SH32FU-TE85R

002-Y6. 004-B4. 005-F5. 005-19. 006-W1	BG
002-Y6. 004-B4. 005-C5. 005-19. 006-W1	BF
P72	CS_RC
P74	LSI_CLK
P80	DATA1
P81	DATA2
P82	DATA3
P83	DATA4

D2 RD3 0UH-T1
D3 RD3 0UH-T1
D4 RD3 0UH-T1
D11 RD3. 0UH-T1

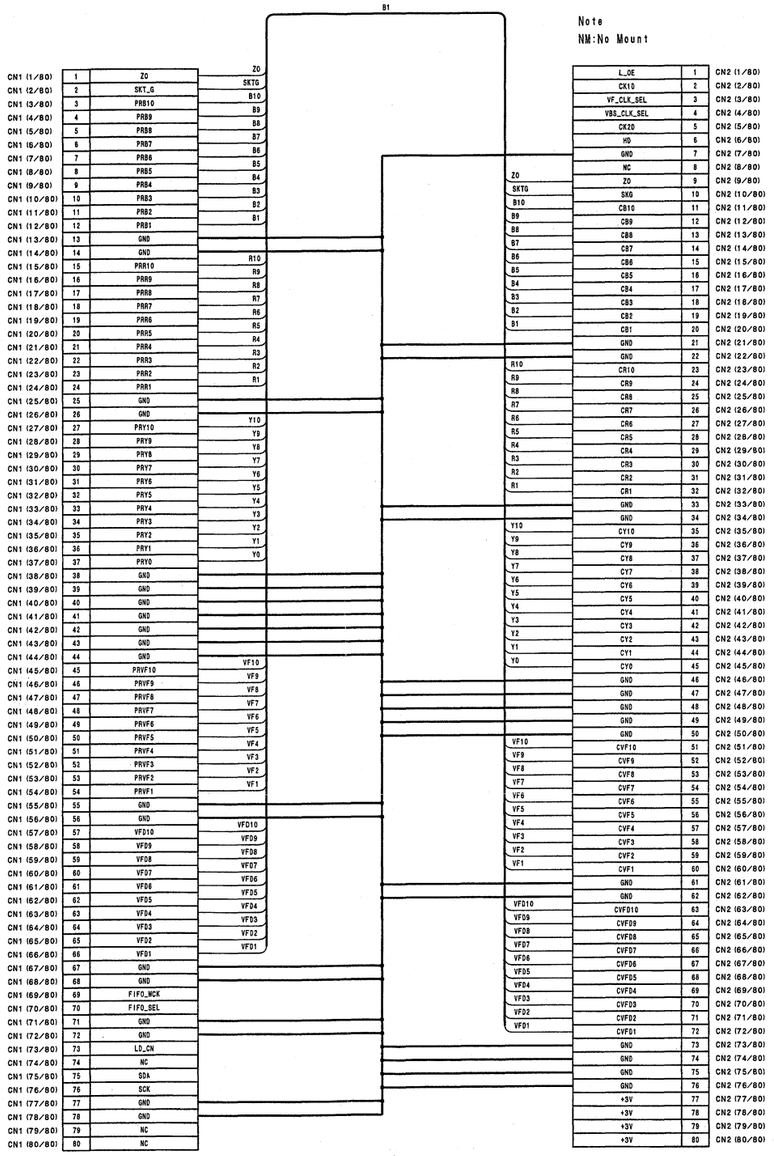

CN-1573 (for DVW-707/707P)
LOT NO. 811-

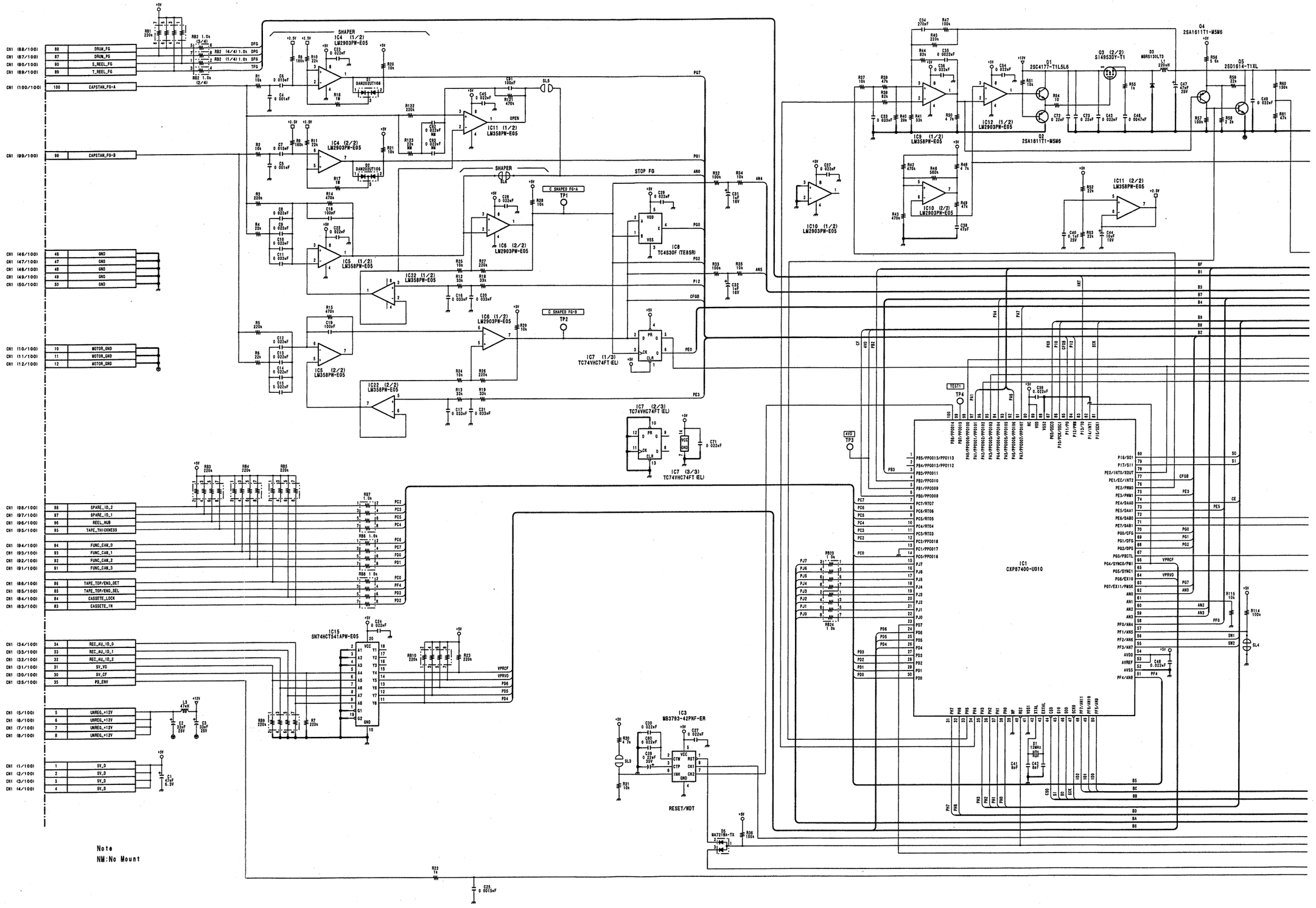
SHAPER
IC4 (1/2) LM2903PW-E05
IC4 (2/2) LM2903PW-E05
IC5 (1/2) LM358PW-E05
IC5 (2/2) LM358PW-E05
IC6 (1/2) LM2903PW-E05
IC6 (2/2) LM2903PW-E05
IC22 (1/2) LM358PW-E05
IC22 (2/2) LM358PW-E05
IC11 (1/2) LM358PW-E05
IC7 (1/3) TC74VHC74FT (EL)
IC7 (2/3) TC74VHC74FT (EL)
IC7 (3/3) TC74VHC74FT (EL)
IC8 TC4S30F (TE85R)
IC15 SN74HCT541APW-E05
IC3 MB3793-42PNF-ER
RESET/WDT
IC1 CXP87400-U010
IC9 (1/2) LM358PW-E05
IC12 (1/2) LM2903PW-E05
IC10 (1/2) LM2903PW-E05
IC10 (2/2) LM2903PW-E05
IC11 (1/2) LM358PW-E05
Q1 2SC4177-T1L5L6
Q2 2SA1611T1-M5M6
Q3 (2/2) S1495DY-T1
Q4 2SA1611T1-M5M6
Q5 2SD1614-T1XL
D3 MBR0130LT3
STOP FG
C SHAPED FG-A
C SHAPED FG-B
TP1
TP2
TP3
TP4
CN1 (88/100) 88 DRUM_FG
CN1 (87/100) 87 DRUM_PG
CN1 (90/100) 90 S_REEL_FG
CN1 (89/100) 89 T_REEL_FG
CN1 (100/100) 100 CAPSTAN_FG-A
CN1 (99/100) 99 CAPSTAN_FG-B
CN1 (46/100) 46 GND
CN1 (47/100) 47 GND
CN1 (48/100) 48 GND
CN1 (49/100) 49 GND
CN1 (50/100) 50 GND
CN1 (10/100) 10 MOTOR_GND
CN1 (11/100) 11 MOTOR_GND
CN1 (12/100) 12 MOTOR_GND
CN1 (98/100) 98 SPARE_ID_2
CN1 (97/100) 97 SPARE_ID_1
CN1 (96/100) 96 REEL_HUB
CN1 (95/100) 95 TAPE_THICKNESS
CN1 (94/100) 94 FUNC_CAM_0
CN1 (93/100) 93 FUNC_CAM_1
CN1 (92/100) 92 FUNC_CAM_2
CN1 (91/100) 91 FUNC_CAM_3
CN1 (86/100) 86 TAPE_TOP/END_DET
CN1 (85/100) 85 TAPE_TOP/END_SEL
CN1 (84/100) 84 CASSETTE_LOCK
CN1 (83/100) 83 CASSETTE_IN
CN1 (34/100) 34 REC_AU_ID_0
CN1 (33/100) 33 REC_AU_ID_1
CN1 (32/100) 32 REC_AU_ID_2
CN1 (31/100) 31 SV_VD
CN1 (30/100) 30 SV_CF
CN1 (35/100) 35 PB_ENV
CN1 (5/100) 5 UNREG_+12V
CN1 (6/100) 6 UNREG_+12V
CN1 (7/100) 7 UNREG_+12V
CN1 (8/100) 8 UNREG_+12V
CN1 (1/100) 1 5V_D
CN1 (2/100) 2 5V_D
CN1 (3/100) 3 5V_D
CN1 (4/100) 4 5V_D
Note
NM:No Mount

DVP-14 (7/7)

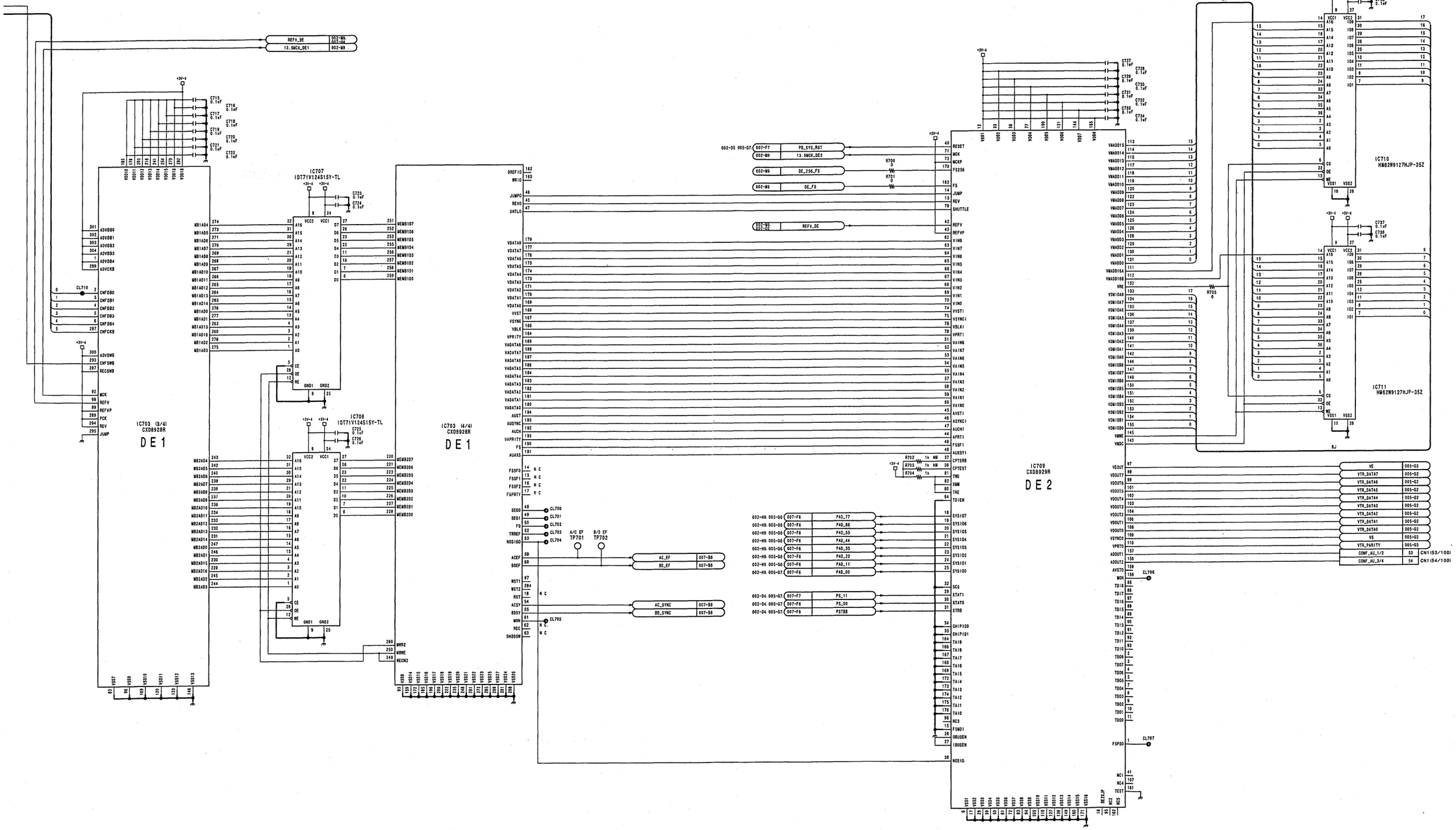

DVW-790WS/709WS/707
DVW-790WSP/709WSP/707P P2V2

4-71

4-71

DVP-14 (7/7)
LOT NO. 810-

DVP-14 (7/7)

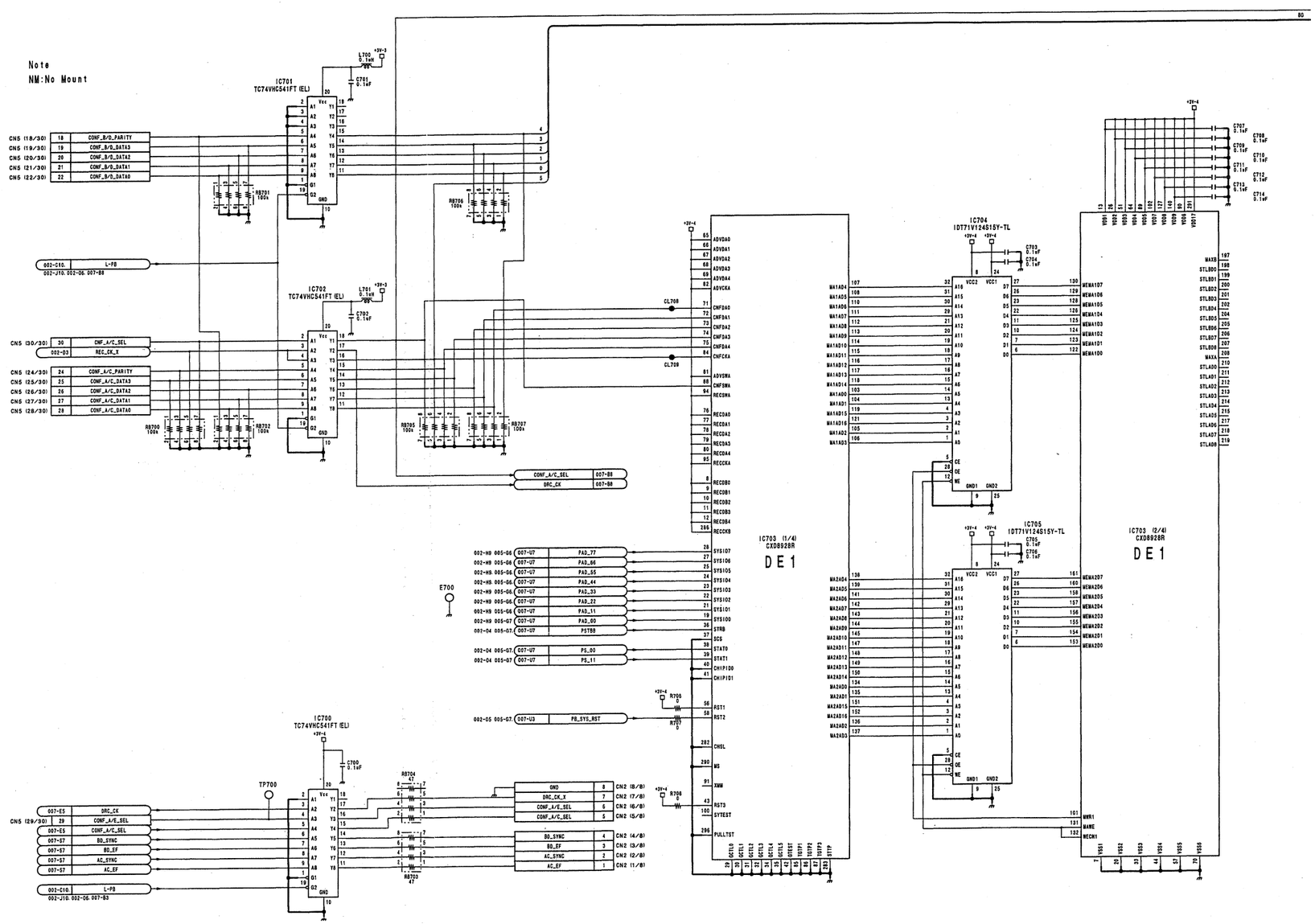
Note
NM:No Mount
IC701
TC74VHC541FT (EL)
IC702
TC74VHC541FT (EL)
IC700
TC74VHC541FT (EL)
IC704
IDT71V124S15Y-TL
IC705
IDT71V124S15Y-TL
IC703 (1/4)
CXD8928R
D E 1
IC703 (2/4)
CXD8928R
D E 1
CN5 (18/30) CONF_B/D_PARITY
CN5 (19/30) CONF_B/D_DATA3
CN5 (20/30) CONF_B/D_DATA2
CN5 (21/30) CONF_B/D_DATA1
CN5 (22/30) CONF_B/D_DATA0
CN5 (30/30) CONF_A/C_SEL
CN5 (24/30) CONF_A/C_PARITY
CN5 (25/30) CONF_A/C_DATA3
CN5 (26/30) CONF_A/C_DATA2
CN5 (27/30) CONF_A/C_DATA1
CN5 (28/30) CONF_A/C_DATA0
CN5 (29/30) CONF_A/E_SEL
002-C10 L-PB
002-J10, 002-D6, 007-B8
002-03 REC_CK_X
CONF_A/C_SEL 007-B8
DRC_CK 007-B8
E700
TP700
R8701 100k
R8706 100k
R8700 100k
R8705 100k
R8707 100k
R8722 100k
R8704 47
R8703 47
R709 0
R707 0
R708 0
C700 0.1uF
C701 0.1uF
C702 0.1uF
C703 0.1uF
C704 0.1uF
C705 0.1uF
C706 0.1uF
C707 0.1uF
C708 0.1uF
C709 0.1uF
C710 0.1uF
C711 0.1uF
C712 0.1uF
C713 0.1uF
C714 0.1uF
L700 0.1uH
L701 0.1uH
CL708
CL709
PAD_77
PAD_66
PAD_55
PAD_44
PAD_33
PAD_22
PAD_11
PAD_00
PSTB8
PS_00
PS_11
PB_SYS_RST
GND
DRC_CK
CONF_A/E_SEL
CONF_A/C_SEL
BD_SYNC
BD_EF
AC_SYNC
AC_EF
CN2 (8/8)
CN2 (7/8)
CN2 (6/8)
CN2 (5/8)
CN2 (4/8)
CN2 (3/8)
CN2 (2/8)
CN2 (1/8)

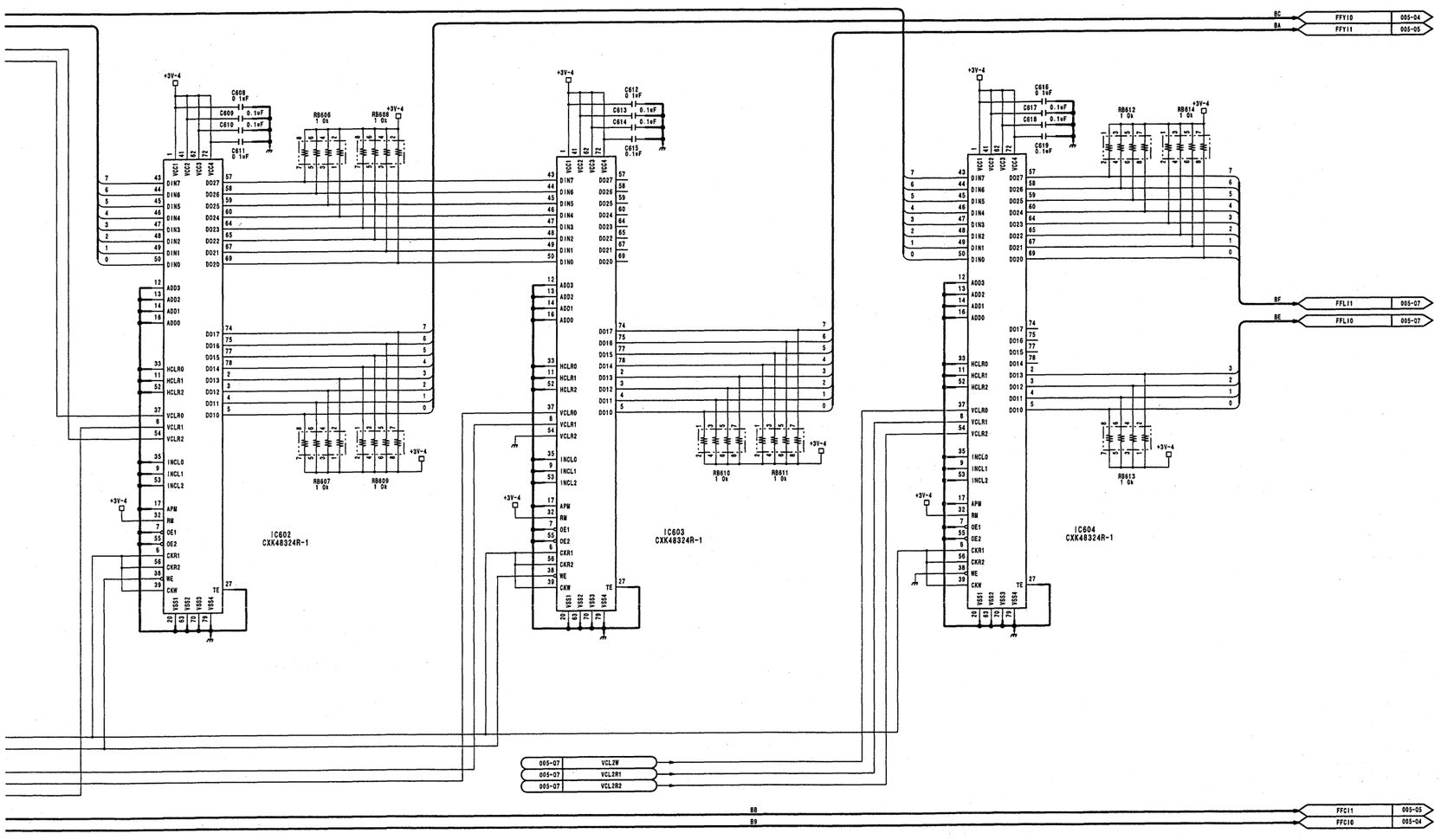

DVP-14 (6/7)
LOT NO. 810-

DVP-14 (6/7)

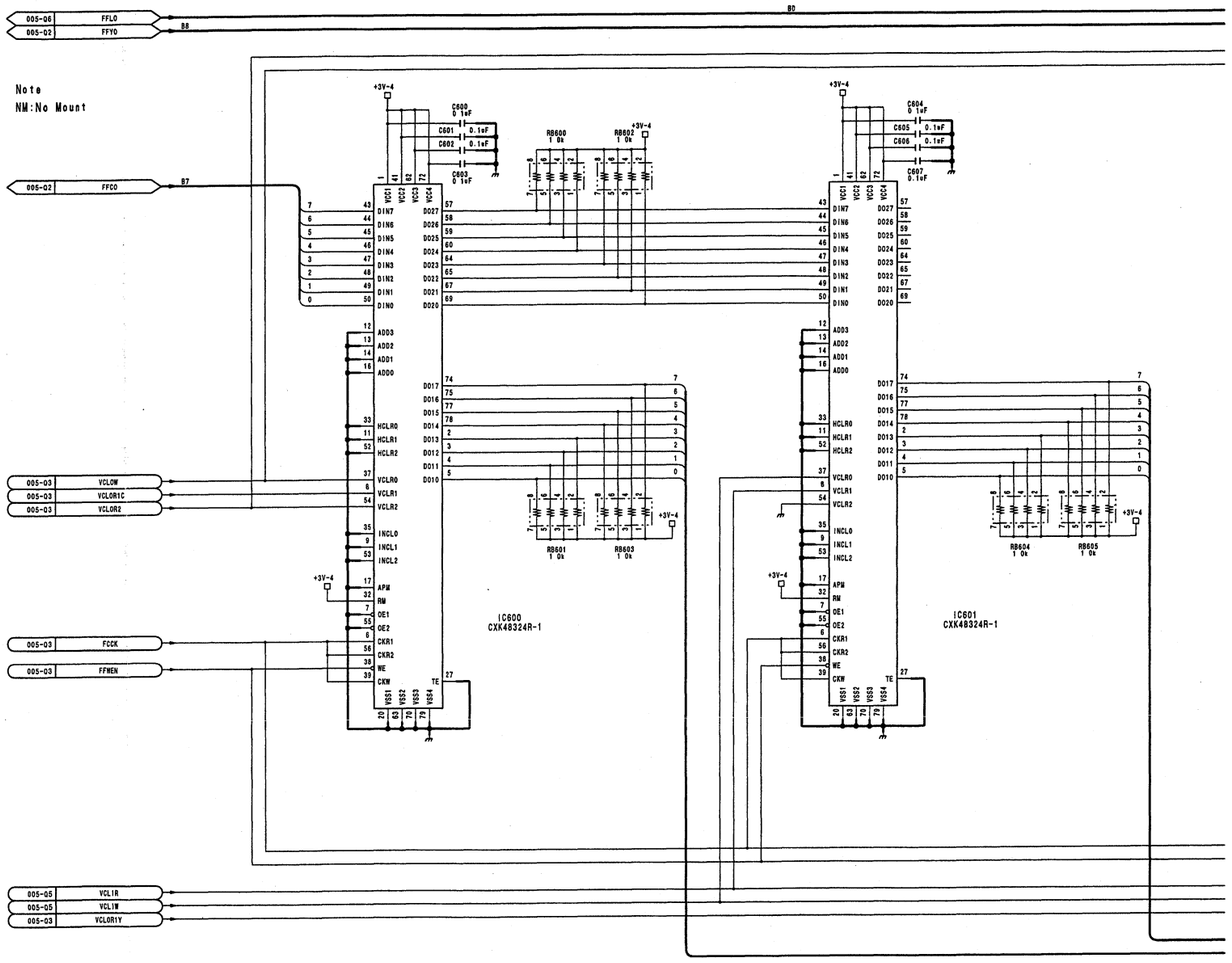

DVP-14 (5/7)

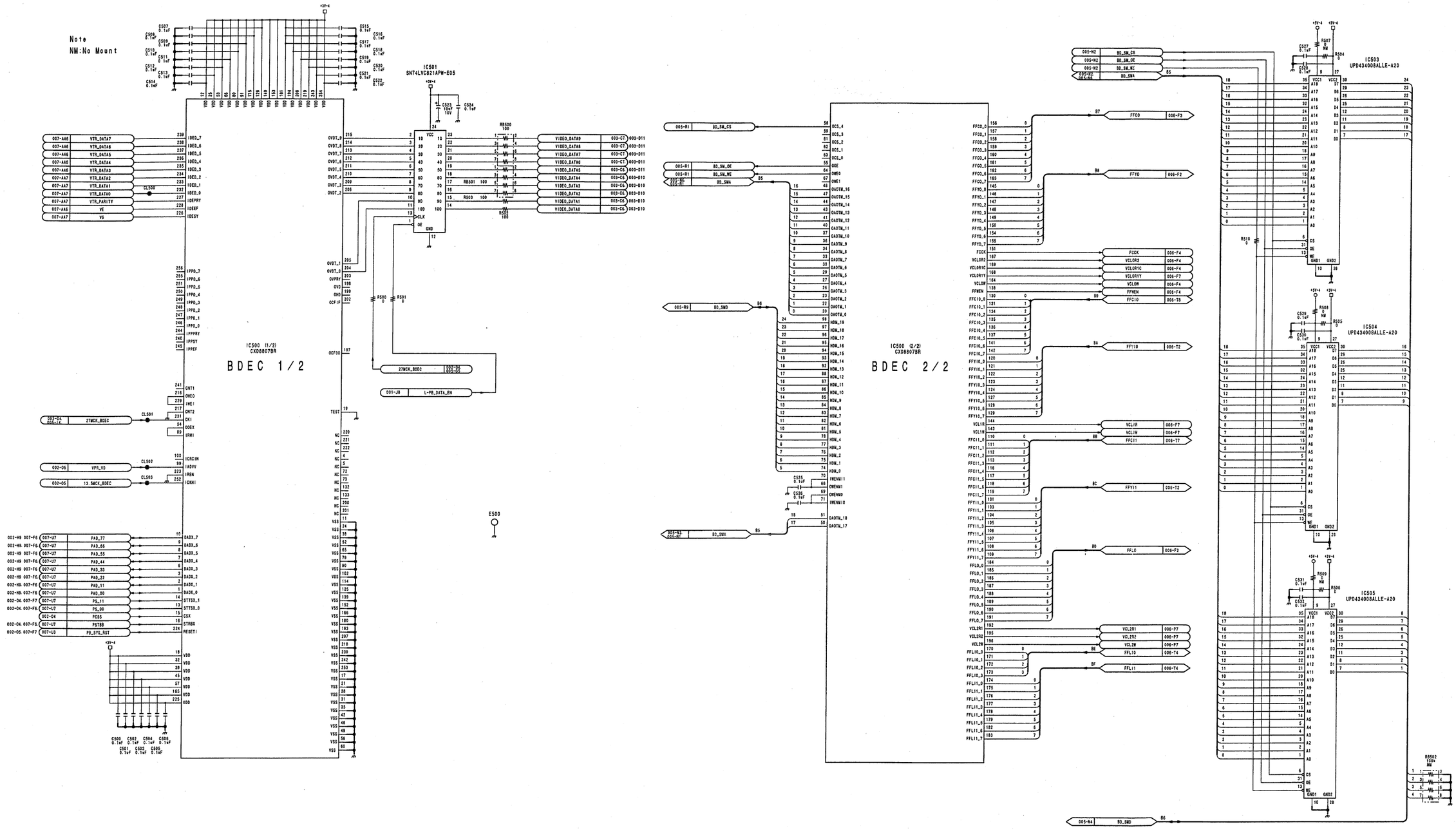

DVP-14 (5/7)

LOT NO. 810-

DVP-14 (4/7)

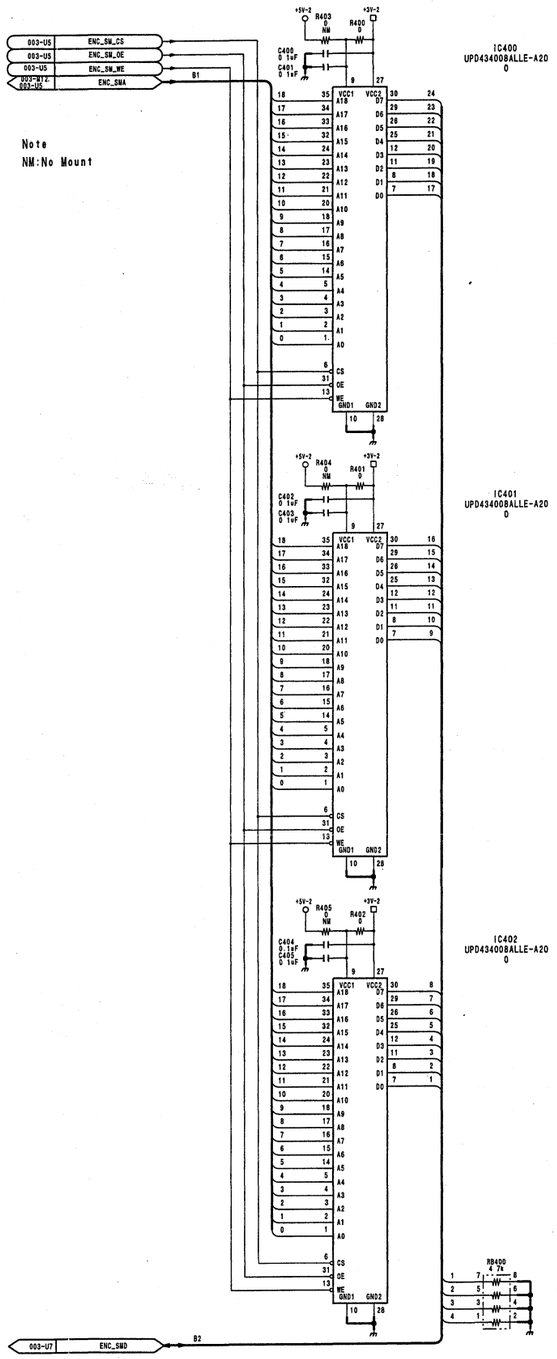

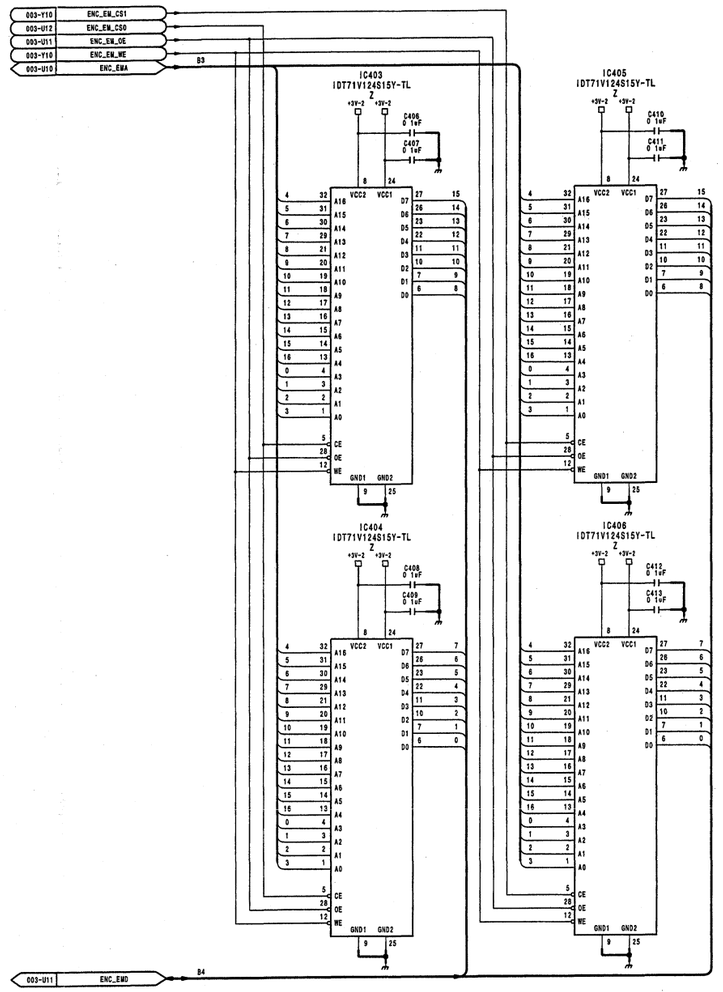

DVP-14 (4/7)
LOT NO. 810-

4-66

DVP-14 (3/7)

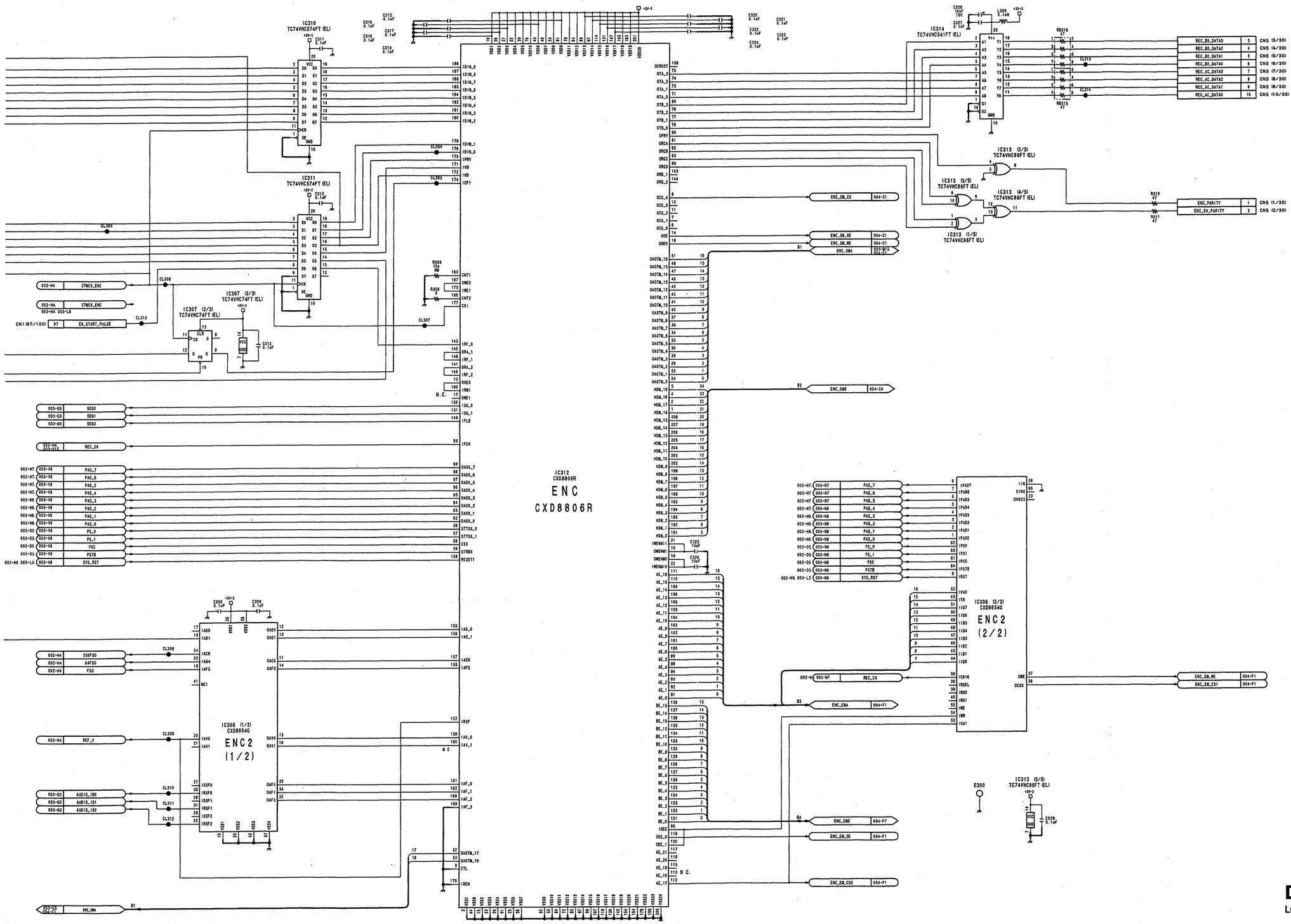

DVW-790WS/709WS/707
DVW-790WSP/709WSP/707P P2V2

4-65

4-65

DVP-14 (3/7)
LOT NO. 810-

DVP-14 (3/7)

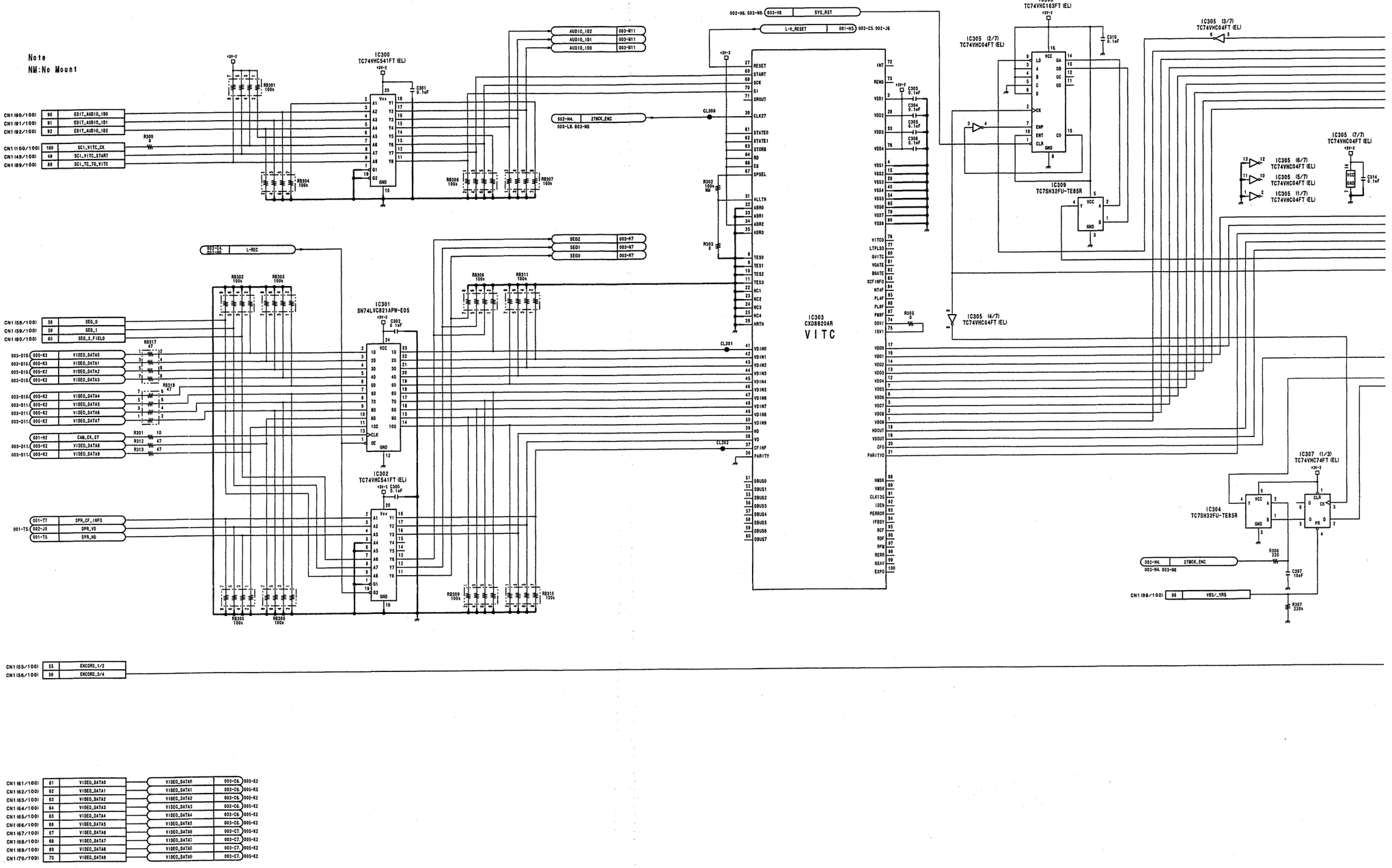

4-64

DVW-790WS/709WS/707
DVW-790WSP/709WSP/707P P2V2

SONY-SP1386 / DRUCK 80

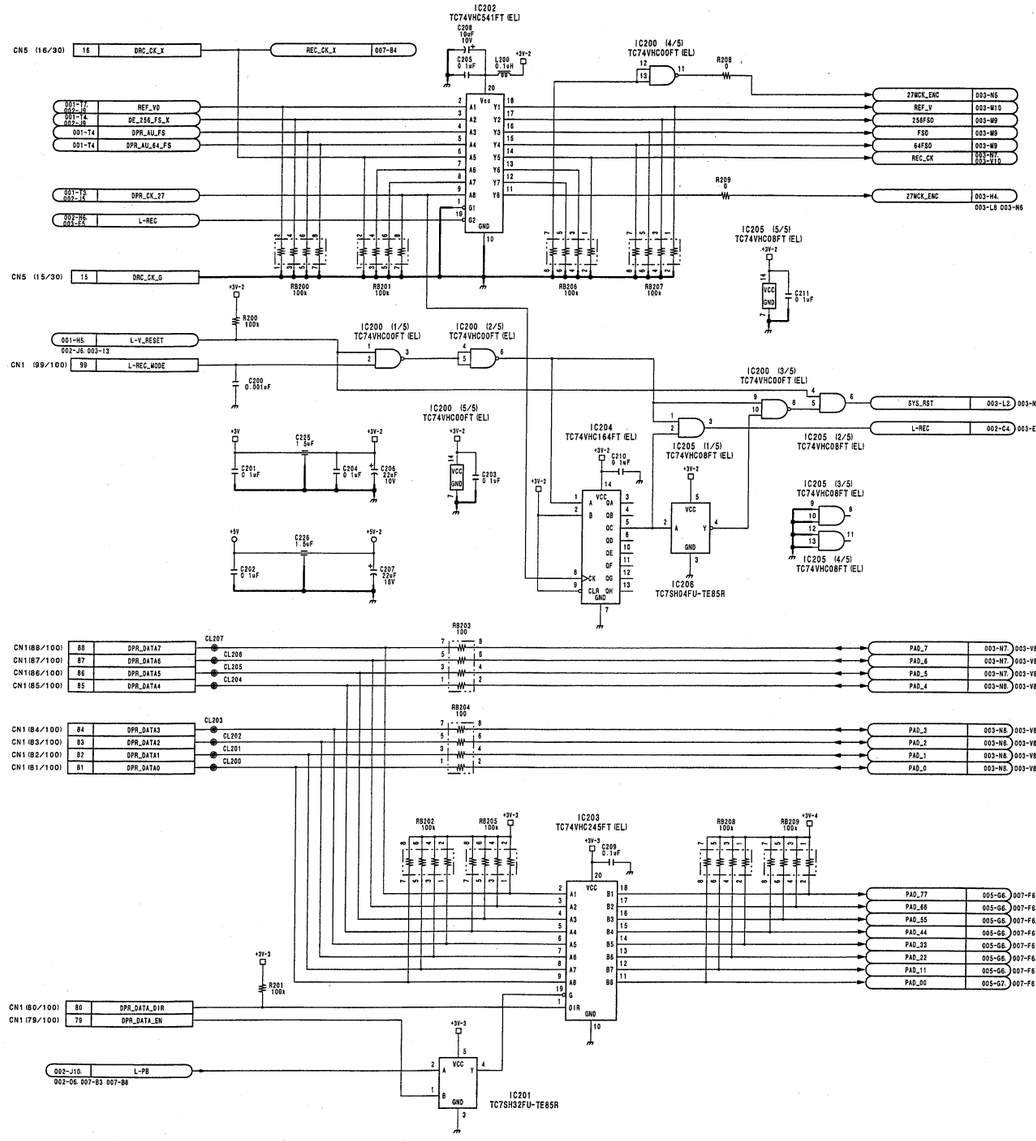

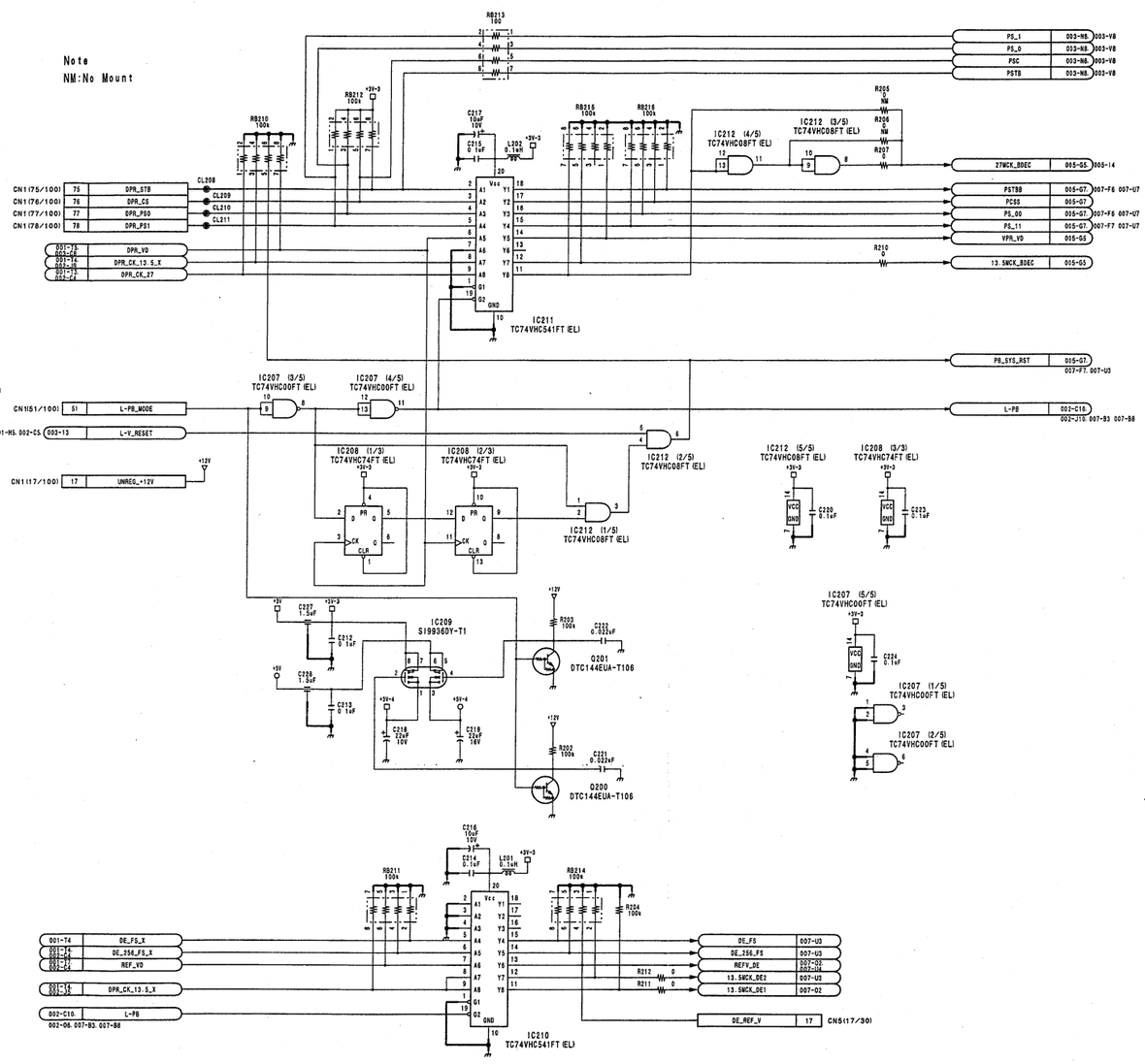

DVW-790WS/709WS/707
DVW-790WSP/709WSP/707P P2V2

4-63 4-63

-SP1386 / DRUCK 79

DVP-14 (2/7)
LOT NO. 810-

DVP-14 (1/7)

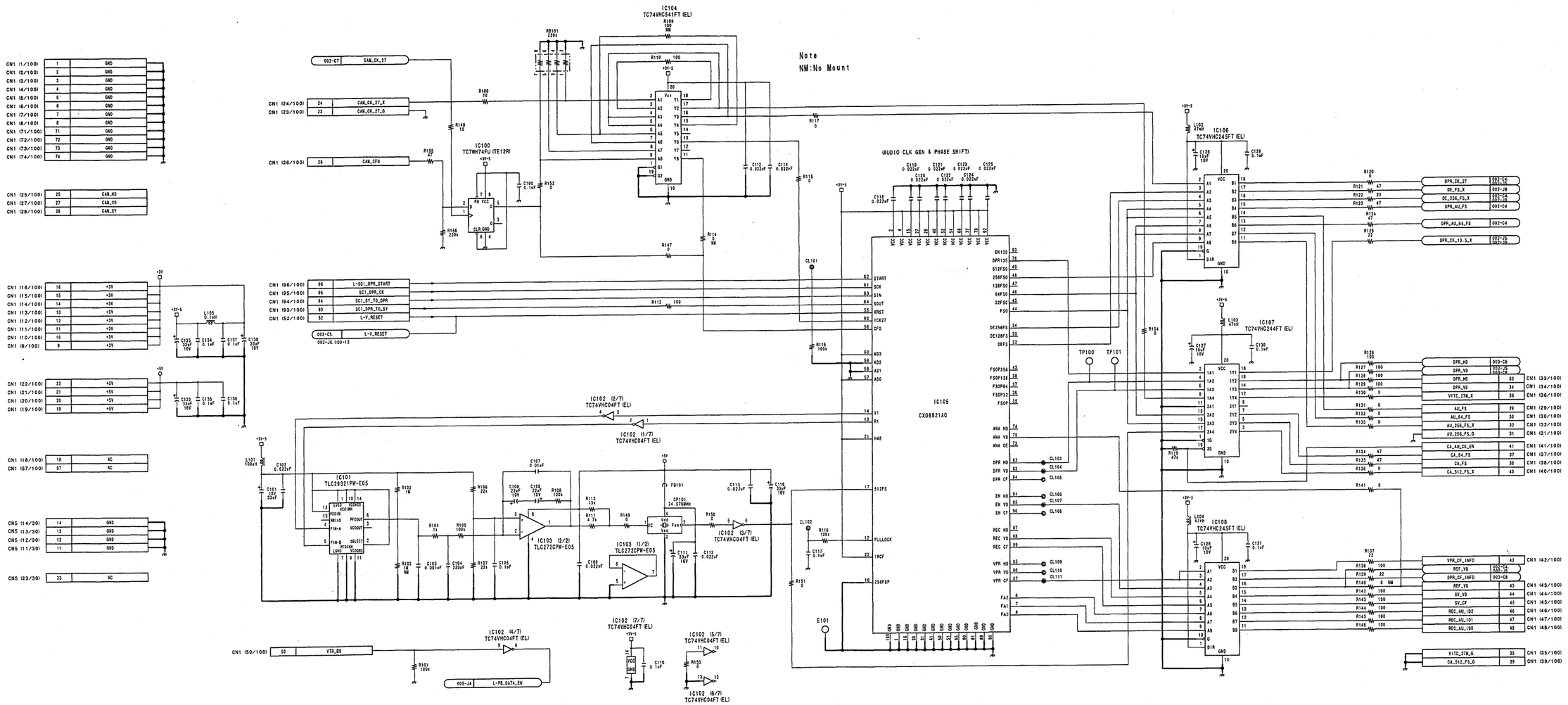

DVP-14 (1/7)

LOT NO. 810-

4-62

DVW-790WS/709WS/707
DVW-790WSP/709WSP/707P P2V2

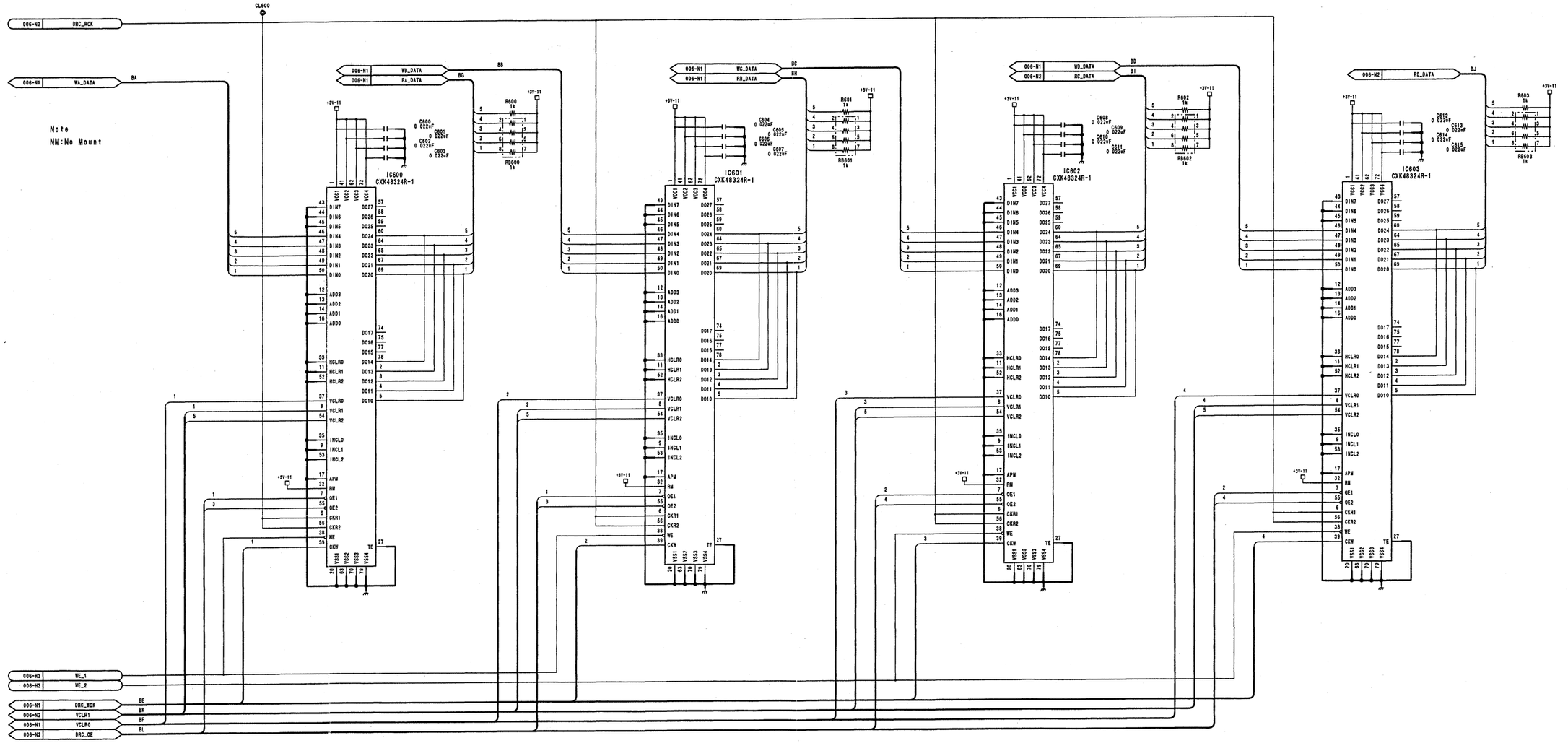

DVP-17 (8/8)
LOT NO. 810-

DVP-17 (7/8)

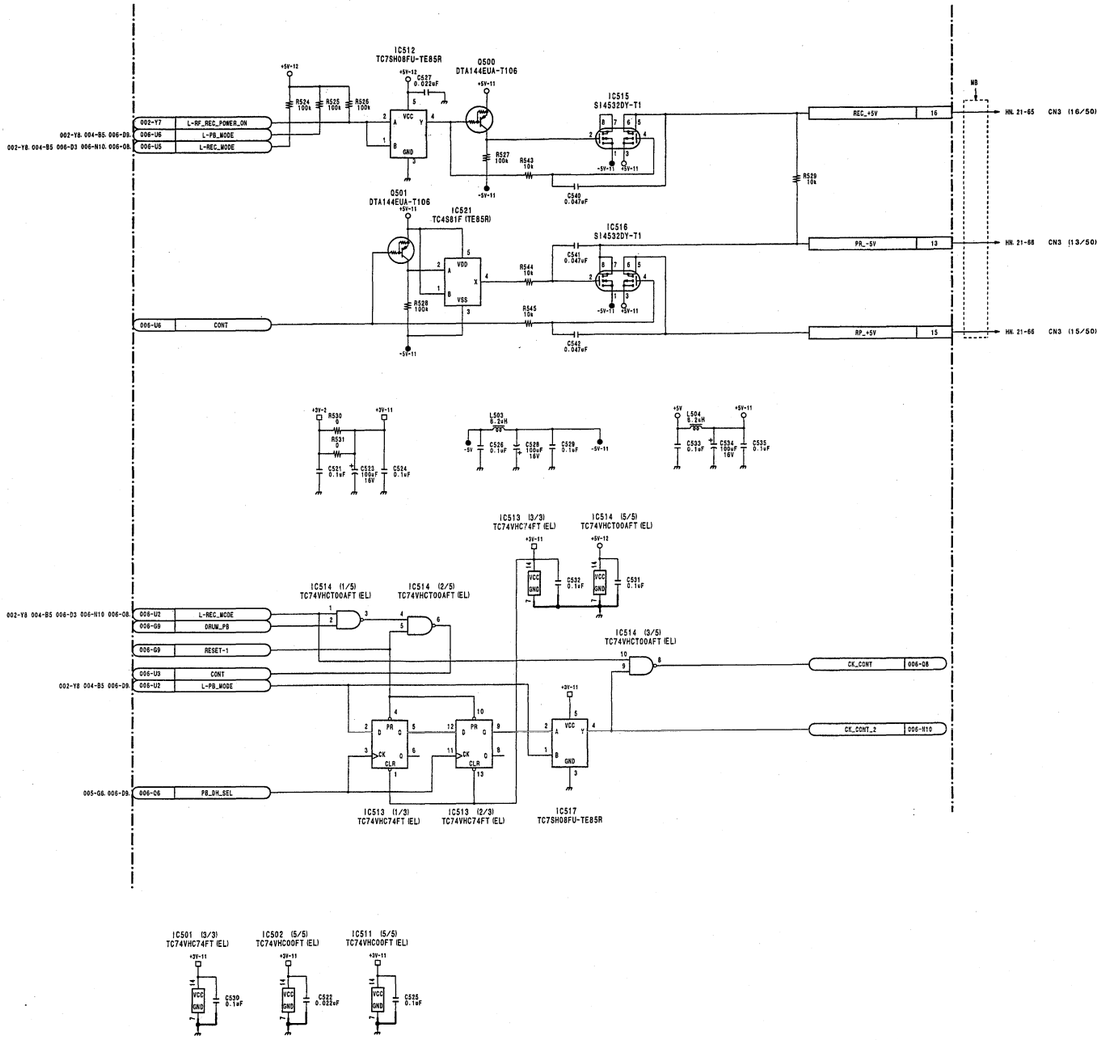

DVP-17 (7/8)
LOT NO. 810-

DVP-17 (7/8)

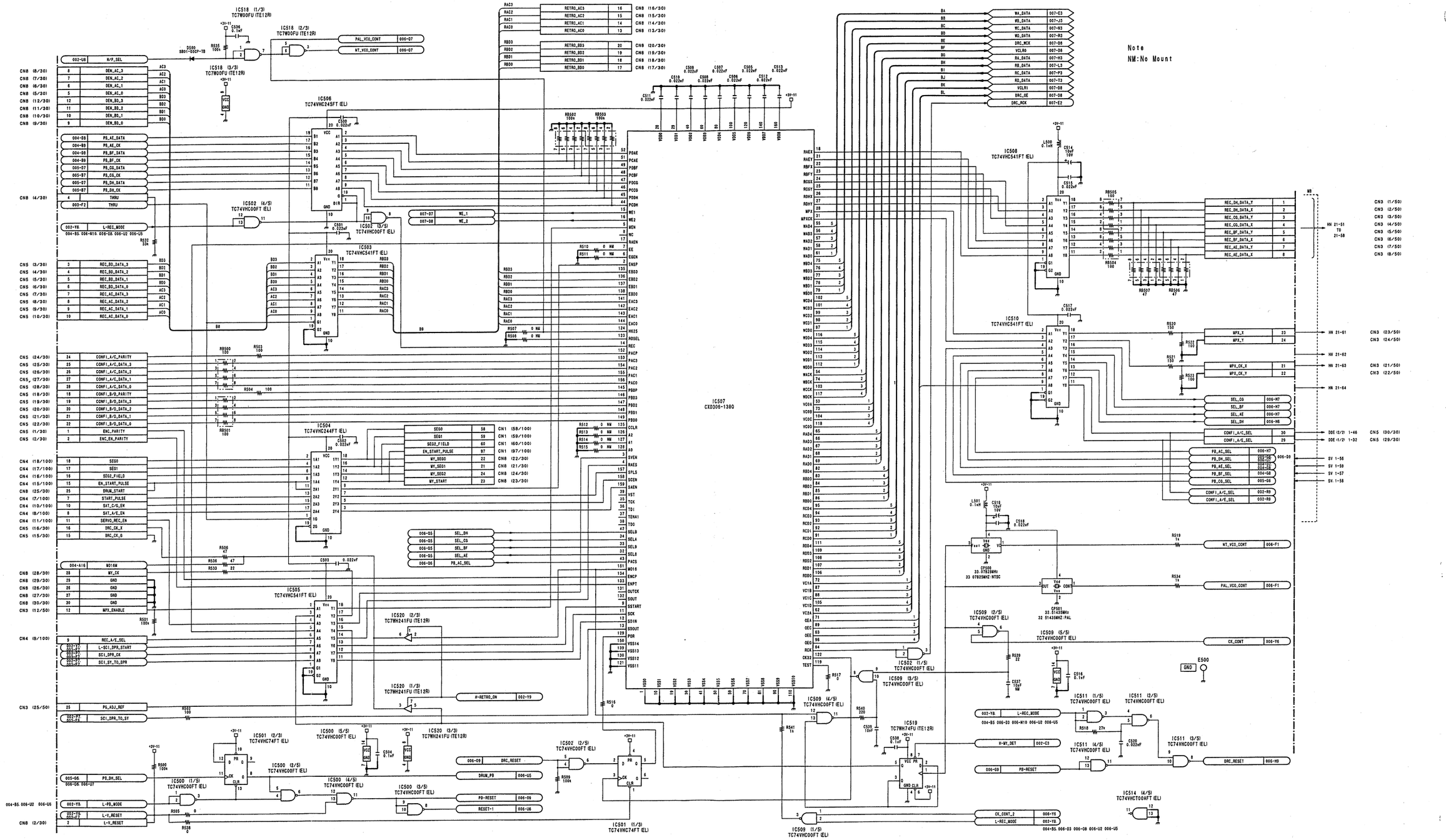
Note
NM:No Mount
IC518 (1/3) TC7W00FU (TE12R)
IC518 (2/3) TC7W00FU (TE12R)
IC518 (3/3) TC7W00FU (TE12R)
IC506 TC74VHC245FT (EL)
IC502 (4/5) TC74VHC00FT (EL)
IC502 (5/5) TC74VHC00FT (EL)
IC503 TC74VHC541FT (EL)
IC504 TC74VHC244FT (EL)
IC505 TC74VHC541FT (EL)
IC507 CXD3068-138Q
IC508 TC74VHC541FT (EL)
IC510 TC74VHC541FT (EL)
IC520 (2/3) TC7WH241FU (TE12R)
IC520 (1/3) TC7WH241FU (TE12R)
IC520 (3/3) TC7WH241FU (TE12R)
IC500 (5/5) TC74VHC00FT (EL)
IC501 (2/3) TC74VHC74FT (EL)
IC500 (1/5) TC74VHC00FT (EL)
IC500 (3/5) TC74VHC00FT (EL)
IC500 (4/5) TC74VHC00FT (EL)
IC500 (3/5) TC74VHC00FT (EL)
IC502 (2/5) TC74VHC00FT (EL)
IC501 (1/3) TC74VHC74FT (EL)
IC509 (1/5) TC74VHC00FT (EL)
IC509 (2/5) TC74VHC00FT (EL)
IC509 (3/5) TC74VHC00FT (EL)
IC509 (4/5) TC74VHC00FT (EL)
IC509 (5/5) TC74VHC00FT (EL)
IC502 (1/5) TC74VHC00FT (EL)
IC519 TC7WH74FU (TE12R)
IC511 (1/5) TC74VHC00FT (EL)
IC511 (2/5) TC74VHC00FT (EL)
IC511 (3/5) TC74VHC00FT (EL)
IC511 (4/5) TC74VHC00FT (EL)
IC514 (4/5) TC74VHCT04AFT (EL)
IC501 (3/3) TC74VHC74FT (EL)
CN8 (8/30) CN8 (7/30) CN8 (6/30) CN8 (5/30) CN8 (12/30) CN8 (11/30) CN8 (10/30) CN8 (9/30)
CN8 (4/30)
CN5 (3/30) CN5 (4/30) CN5 (5/30) CN5 (6/30) CN5 (7/30) CN5 (8/30) CN5 (9/30) CN5 (10/30)
CN5 (24/30) CN5 (25/30) CN5 (26/30) CN5 (27/30) CN5 (28/30) CN5 (18/30) CN5 (19/30) CN5 (20/30) CN5 (21/30) CN5 (22/30) CN5 (1/30) CN5 (2/30)
CN4 (18/100) CN4 (17/100) CN4 (16/100) CN4 (15/100) CN8 (25/30) CN4 (7/100) CN4 (10/100) CN4 (8/100) CN4 (11/100) CN5 (16/30) CN5 (15/30)
CN8 (28/30) CN8 (29/30) CN8 (26/30) CN8 (27/30) CN8 (30/30) CN3 (12/50)
CN4 (9/100)
CN3 (25/50)
CN5 (23/30) CN5 (24/30) CN5 (25/30) CN5 (26/30) CN5 (27/30) CN5 (28/30) CN5 (18/30) CN5 (19/30) CN5 (20/30) CN5 (21/30) CN5 (22/30) CN5 (1/30) CN5 (2/30)
CN1 (58/100) CN1 (59/100) CN1 (60/100) CN1 (97/100) CN8 (22/30) CN8 (21/30) CN8 (24/30) CN8 (23/30)
CN8 (16/30) CN8 (15/30) CN8 (14/30) CN8 (13/30)
CN8 (20/30) CN8 (19/30) CN8 (18/30) CN8 (17/30)
CN3 (1/50) CN3 (2/50) CN3 (3/50) CN3 (4/50) CN3 (5/50) CN3 (6/50) CN3 (7/50) CN3 (8/50)
CN3 (23/50) CN3 (24/50) CN3 (21/50) CN3 (22/50)
CN5 (30/30) CN5 (29/30)
002-U8 M/P_SEL
004-B8 PB_AE_DATA
004-B9 PB_AE_CK
004-B8 PB_BF_DATA
004-B9 PB_BF_CK
005-B7 PB_CG_DATA
005-B7 PB_CG_CK
005-B7 PB_DH_DATA
005-B7 PB_DH_CK
003-F2 THRU
002-Y6 L-REC_MODE
004-B5, 006-N10, 006-G8, 006-U2, 006-U5
REC_BD_DATA_3
REC_BD_DATA_2
REC_BD_DATA_1
REC_BD_DATA_0
REC_AC_DATA_3
REC_AC_DATA_2
REC_AC_DATA_1
REC_AC_DATA_0
CONFI_A/C_PARITY
CONFI_A/C_DATA_3
CONFI_A/C_DATA_2
CONFI_A/C_DATA_1
CONFI_A/C_DATA_0
CONFI_B/D_PARITY
CONFI_B/D_DATA_3
CONFI_B/D_DATA_2
CONFI_B/D_DATA_1
CONFI_B/D_DATA_0
ENC_PARITY
ENC_EN_PARITY
SEG0
SEG1
SEG2_FIELD
EN_START_PULSE
DRUM_START
START_PULSE
SAT_C/G_EN
SAT_A/E_EN
SERVO_REC_EN
DRC_CK_X
DRC_CK_G
004-A16 MD16M
WT_CK
GND
MPX_ENABLE
REC_A/E_SEL
L-SCI_DPR_START
SCI_DPR_CK
SCI_SY_TO_DPR
PG_ADJ_REF
SCI_DPR_TO_SY
RETRO_AC3
RETRO_AC2
RETRO_AC1
RETRO_AC0
RETRO_BD3
RETRO_BD2
RETRO_BD1
RETRO_BD0
PAL_VCO_CONT 006-G7
NT_VCO_CONT 006-G7
WE_1 007-D7
WE_2 007-D8
H-RETRO_ON 002-Y9
SEG0 58
SEG1 59
SEG2_FIELD 60
EN_START_PULSE 97
WY_SEG0 22
WY_SEG1 21
WY_SEG2 24
WY_START 23
006-D5 SEL_DH
006-D5 SEL_CG
006-D5 SEL_BF
006-D5 SEL_AE
006-D6 PB_AC_SEL
WA_DATA 007-E3
WB_DATA 007-J3
WC_DATA 007-R3
WD_DATA 007-R3
DRC_MCK 007-D8
VCLR0 007-D8
RA_DATA 007-R3
RB_DATA 007-L3
RC_DATA 007-P3
RD_DATA 007-T3
VCLR1 007-D8
DRC_OE 007-D8
DRC_MCK 007-E2
REC_DH_DATA_Y 1
REC_DH_DATA_X 2
REC_CG_DATA_Y 3
REC_CG_DATA_X 4
REC_BF_DATA_Y 5
REC_BF_DATA_X 6
REC_AE_DATA_Y 7
REC_AE_DATA_X 8
MPX_X 23
MPX_Y 24
MPX_CK_X 21
MPX_CK_Y 22
SEL_CG 006-H7
SEL_BF 006-H7
SEL_AE 006-H7
SEL_DH 006-H6
CONFI_A/C_SEL 30
CONFI_A/E_SEL 29
PB_AC_SEL 006-H7
PB_DH_SEL 006-H6
PB_AE_SEL 006-H7
PB_BF_SEL 006-G6
PB_CG_SEL 005-G6
CONFI_A/C_SEL 002-R9
CONFI_A/E_SEL 002-R9
WT_VCO_CONT 006-F1
PAL_VCO_CONT 006-F1
CX_CONT 006-Y6
CX_CONT_2 006-Y6
L-REC_MODE 002-Y6
004-B5, 006-D3, 006-G8, 006-U2, 006-U5
H-WY_DET 002-C3
PB-RESET 006-G9
DRC_RESET 006-H9
DRUM_PB 006-U5
PB-RESET 006-G9
RESET-1 006-U6
L-PB_MODE 002-Y8
L-V_RESET 002-Y5
L-V_RESET
MB
HN 21-51 TO 21-58
HN 21-61
HN 21-62
HN 21-63
HN 21-64
DDE (2/2) 1-46
DDE (1/2) 1-32
SV 1-56
SV 1-59
SV 1-57
SV 1-58
E500 GND

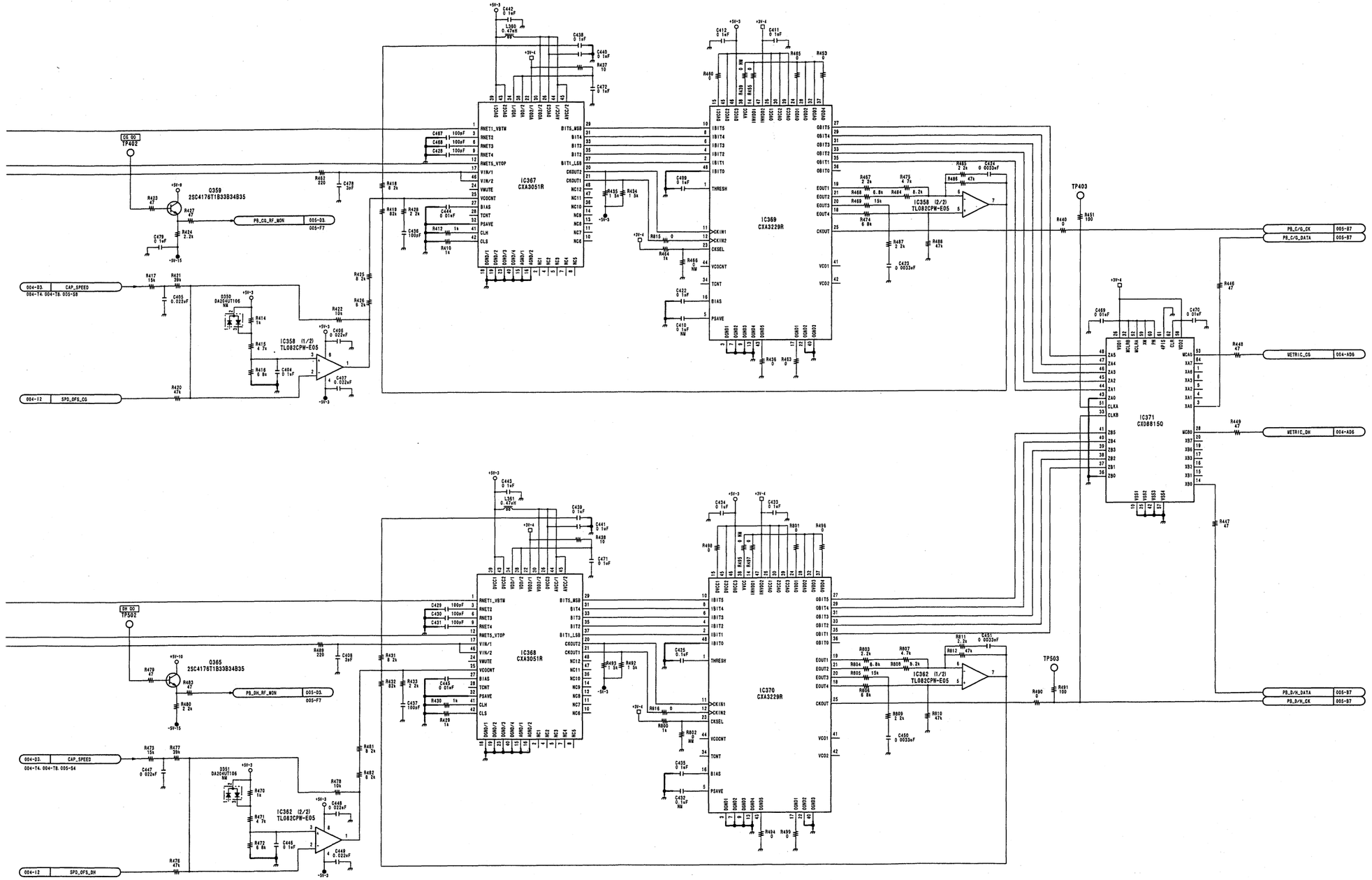

DVP-17 (6/8)
LOT NO. 810-

Note
NM:No Mount

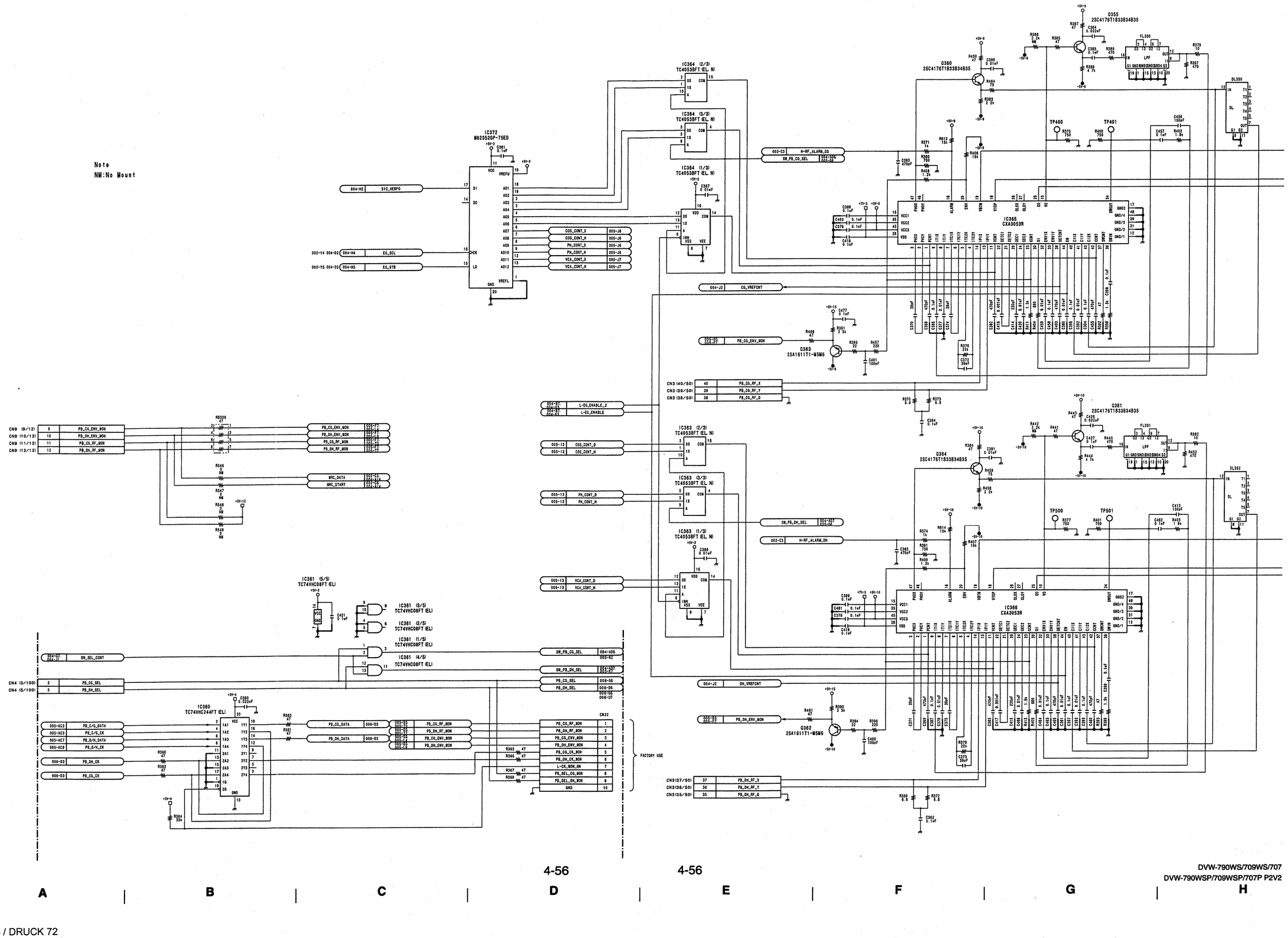

4-56 4-56

DVW-790WS/709WS/707
DVW-790WSP/709WSP/707P P2V2

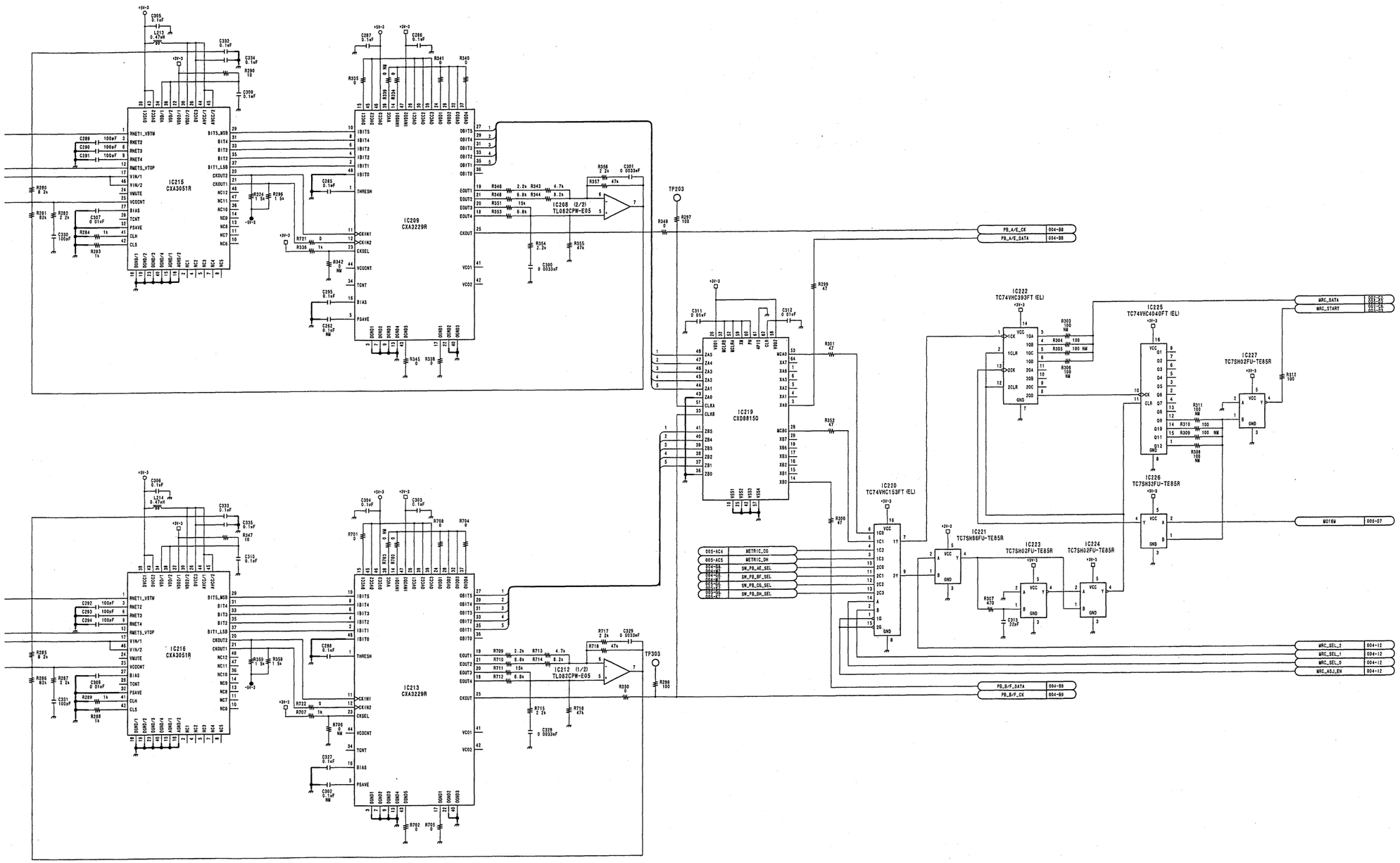

DVP-17 (5/8)
LOT NO. 810-

DVP-17 (5/8)

Note
NM:No Mount

IC228 M62352GP-75ED
IC229 M62352GP-75ED
IC210 (4/5) TC4066BFT (EL, N)
IC210 (3/5) TC4066BFT (EL, N)
IC210 (2/5) TC4066BFT (EL, N)
IC210 (1/5) TC4066BFT (EL, N)
IC210 (5/5) TC4066BFT (EL, N)
IC231 (2/3) TC4053BFT (EL, N)
IC231 (3/3) TC4053BFT (EL, N)
IC231 (1/3) TC4053BFT (EL, N)
IC211 (2/3) TC4053BFT (EL, N)
IC211 (3/3) TC4053BFT (EL, N)
IC211 (1/3) TC4053BFT (EL, N)
IC230 CXA3053R
IC214 CXA3053R
IC208 (1/2) TL082CPW-E05
IC212 (2/2) TL082CPW-E05
Q202 2SC4176T1B33B34B35
Q205 2SC4176T1B33B34B35
Q203 2SC4176T1B33B34B35
Q211 2SC4176T1B33B34B35
Q209 2SC4176T1B33B34B35
Q215 2SC4176T1B33B34B35
Q206 2SA1611T1-M5W6
Q204 2SA1611T1-M5W6
FL200 LPF
FL201 LPF
DL200
DL202
D200 DA204UT106 NM
D201 DA204UT106 NM
TP200
TP201
TP300
TP301
TP202
TP302

SIO_AEBFO
SPD_OFS_AE
SPD_OFS_BF
SPD_OFS_CG
SPD_OFS_DN
WRC_SEL_2
WRC_SEL_1
WRC_SEL_0
WRC_ADJ_EN
EQ_SDA
EQ_SCL
EQ_STB
COS_CONT_B
COS_CONT_F
PIK_CONT_B
PBL_CONT_F
VCA_CONT_B
VCA_CONT_F
SW_SEL_CONT
AE_VREFCNT
BF_VREFCNT
CG_VREFCNT
SW_VREFCNT
H-RF_ALARM_AE
SW_PB_AE_SEL
H-RF_ALARM_BF
SW_PB_BF_SEL
PB_AE_ENV_MON
PB_BF_ENV_MON
PB_ENV
PB_AE_RF_X
PB_AE_RF_Y
PB_AE_RF_G
PB_BF_RF_X
PB_BF_RF_Y
PB_BF_RF_G
L-EQ_ENABLE_2
L-EQ_ENABLE
CAP_SPEED
PB_AE_RF_MON
PB_BF_RF_MON
SPD_OFS_AE
SPD_OFS_BF

4-54

4-54

DVW-790WS/709WS/707
DVW-790WSP/709WSP/707P P2V2

SONY-SP1386 / DRUCK 70

DVP-17 (4/8)

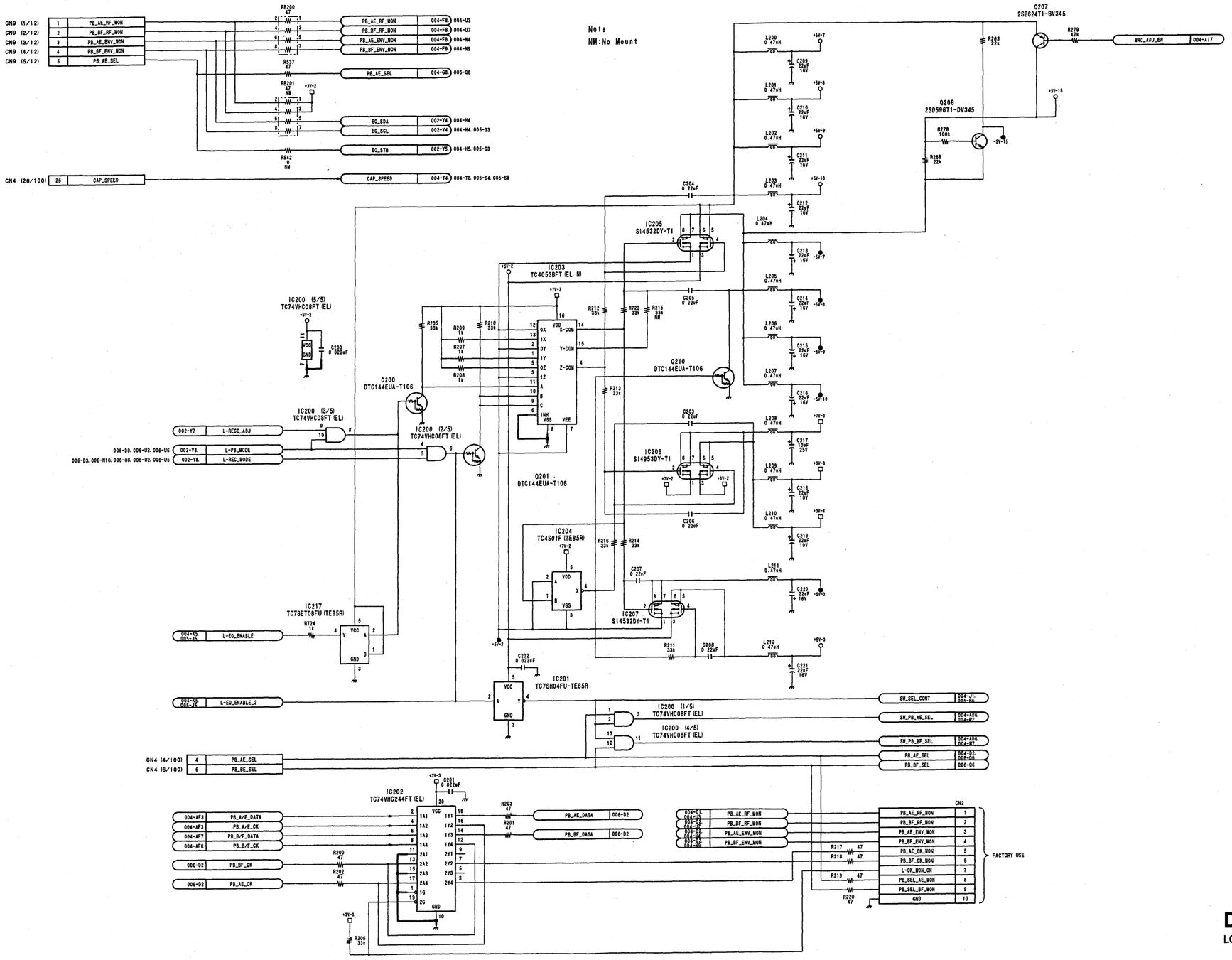

DVP-17 (4/8)
LOT NO. 810-

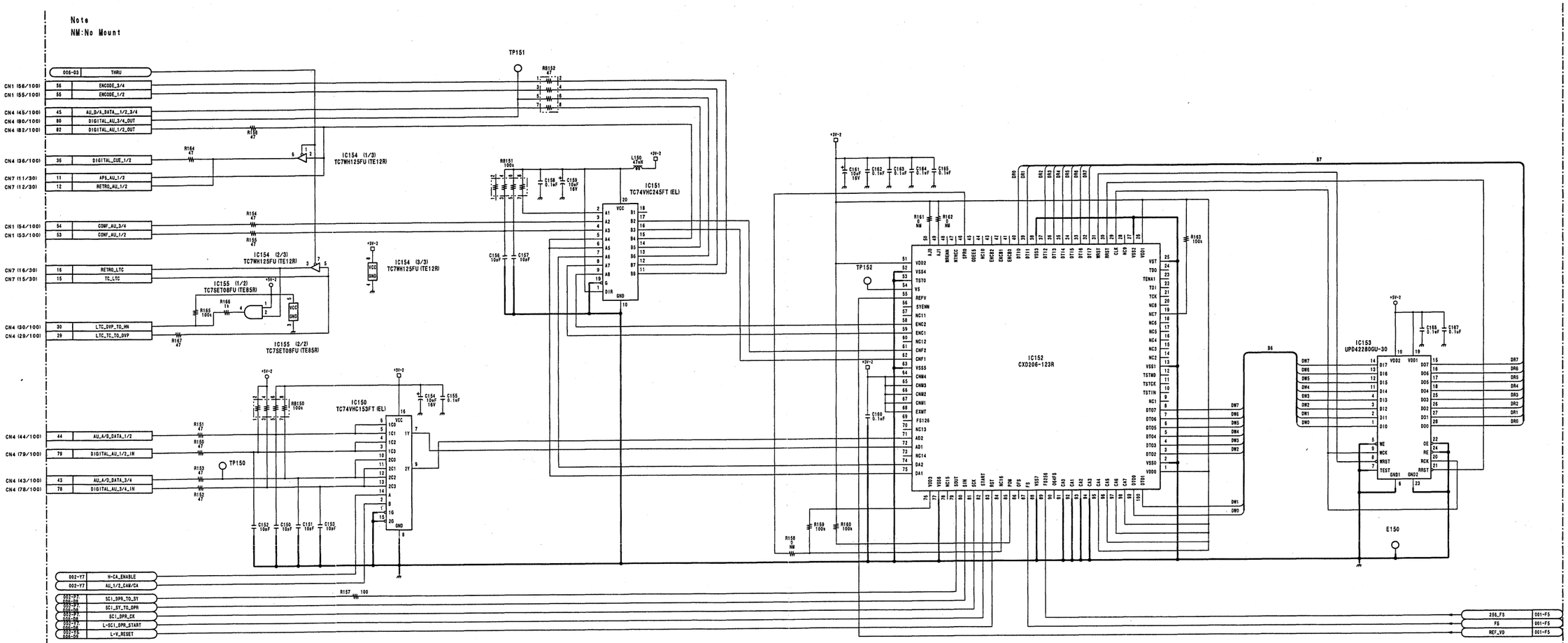

DVP-17 (3/8)

LOT NO. 810-

DVP-17 (2/8)

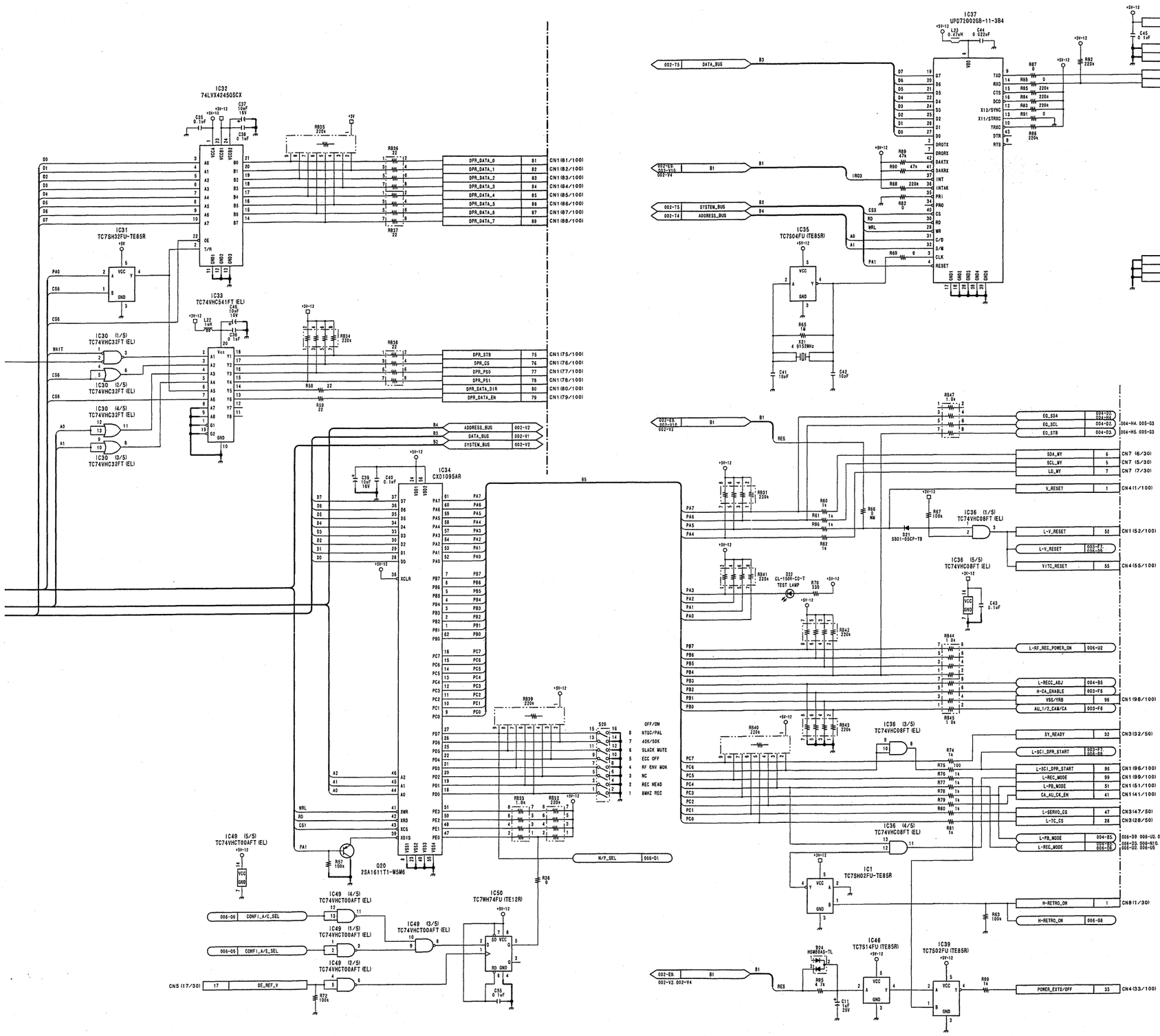

DVP-17 (2/8)
LOT NO. 810-

DVW-790WS/709WS/707
DVW-790WSP/709WSP/707P P2V2

DVP-17 (2/8)

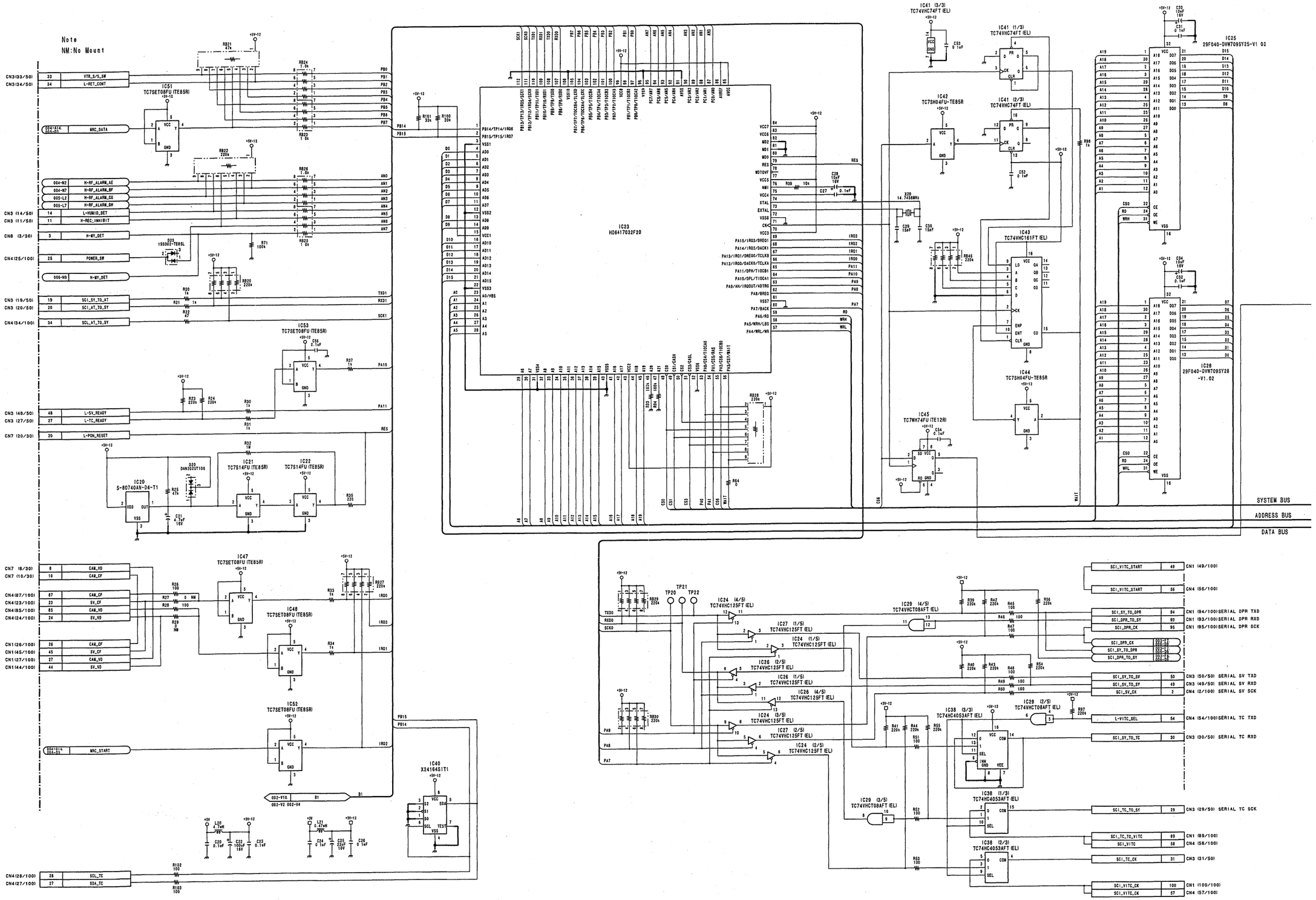

4-50

4-50

DVW-790WS/709WS/707
DVW-790WSP/709WSP/707P P2V2

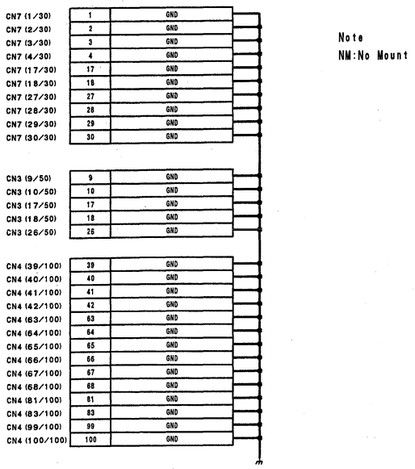

Note
NM:No Mount

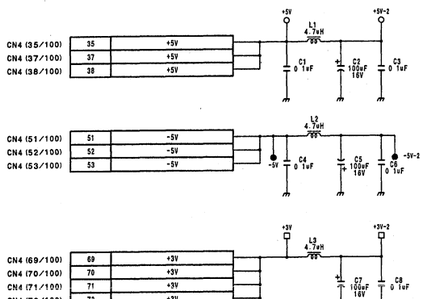

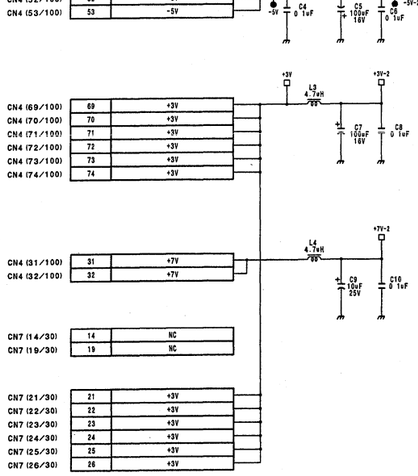

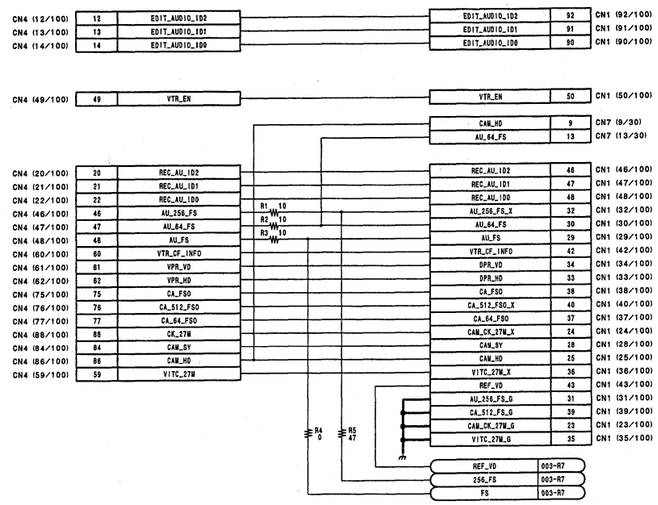

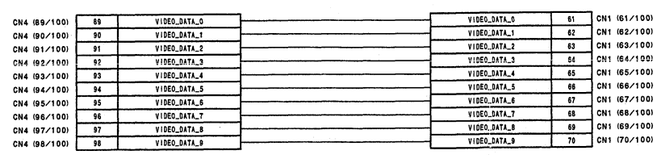

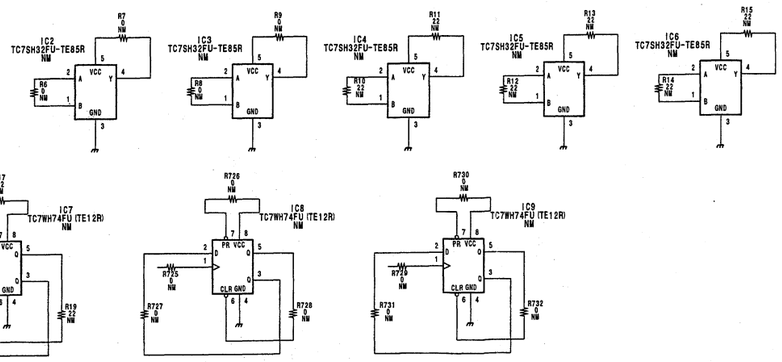

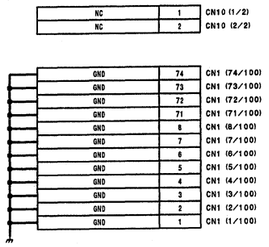

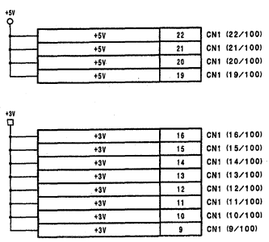

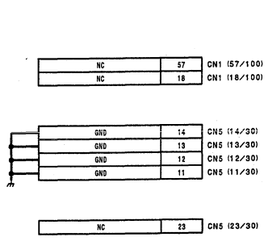

DVP-17 (1/8)
LOT NO. 810-

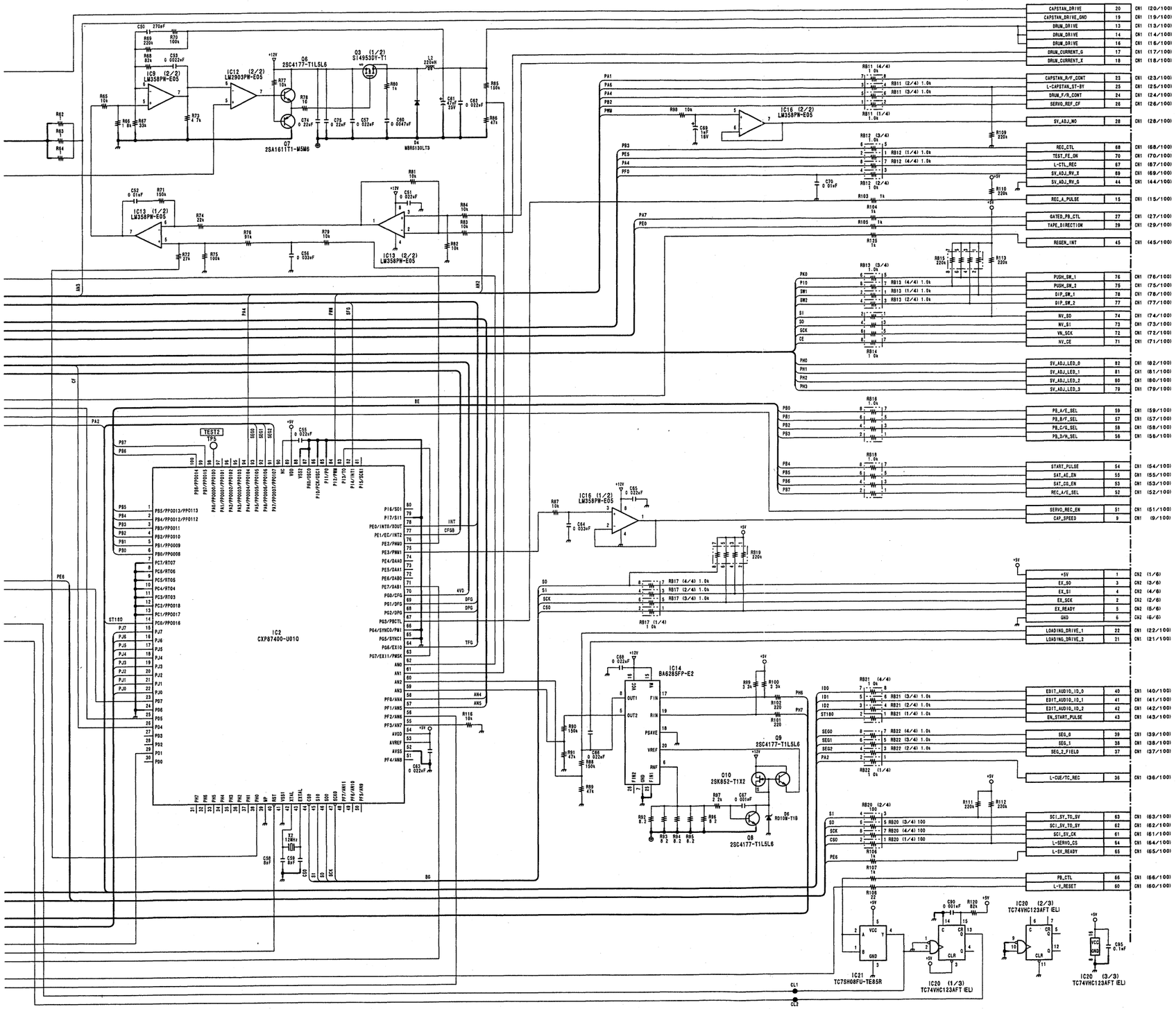

SV-210
LOT NO. 810-

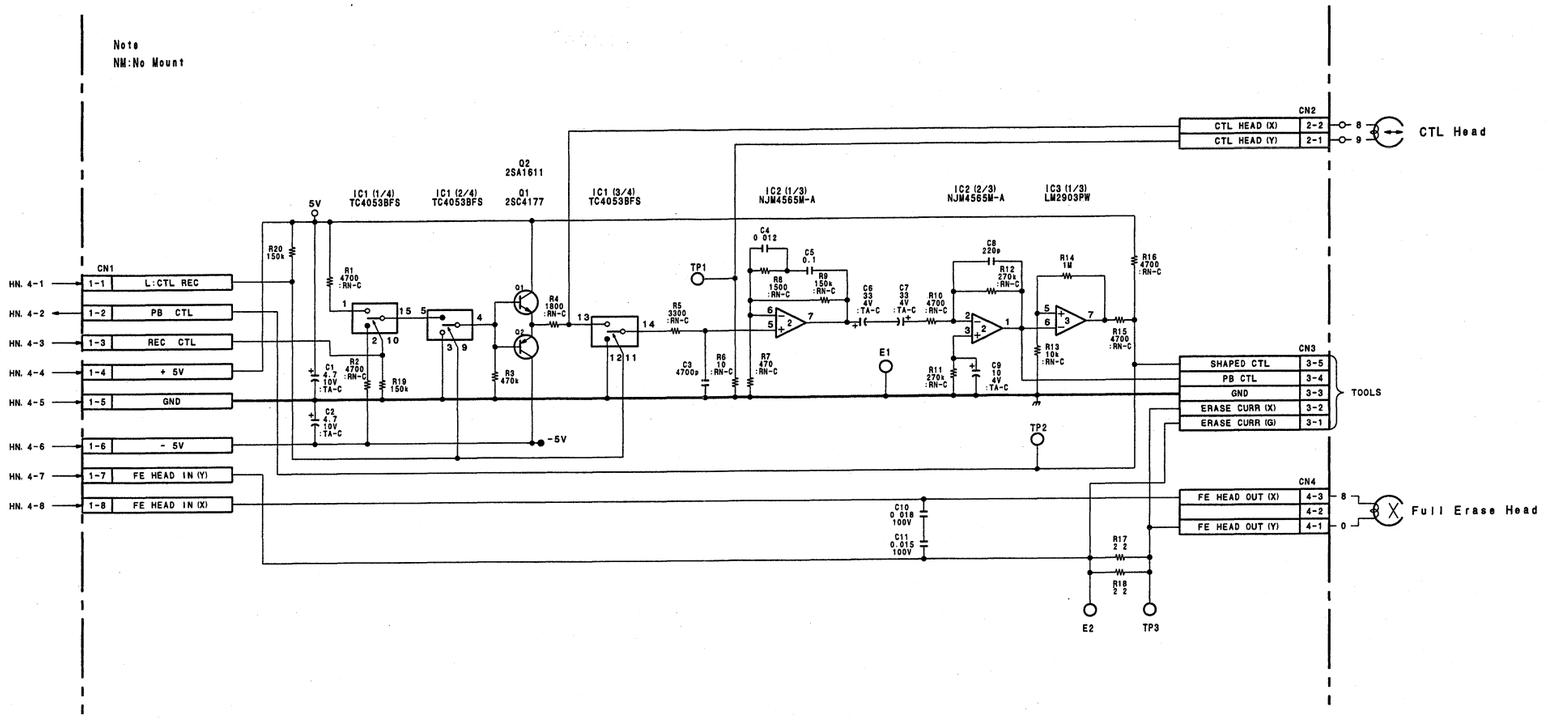

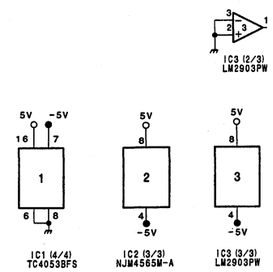

CTL-10
LOT NO. 810-

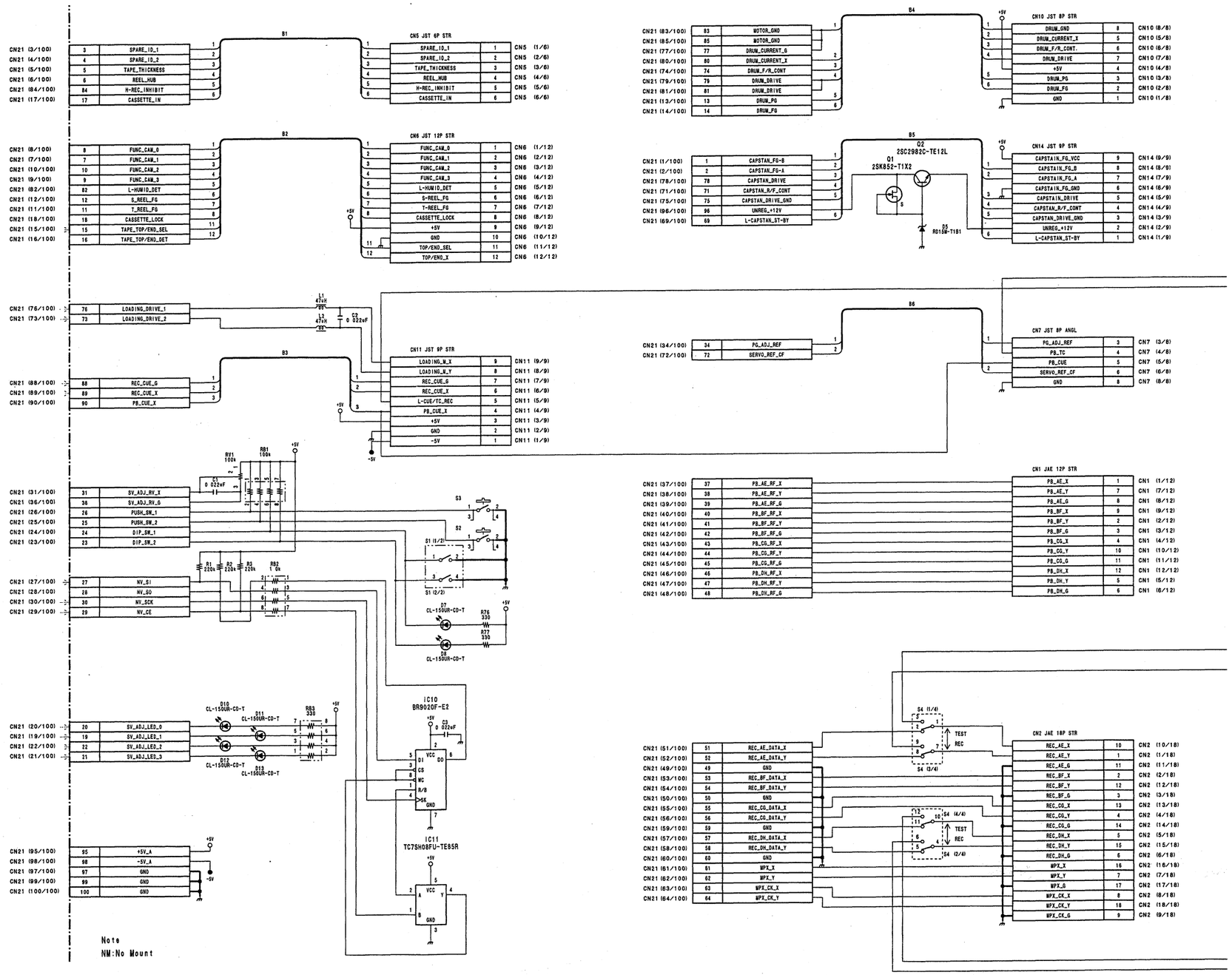
B1
CN5 JST 6P STR
CN21 (3/100) 3 SPARE_IO_1 — SPARE_IO_1 1 CN5 (1/6)
CN21 (4/100) 4 SPARE_IO_2 — SPARE_IO_2 2 CN5 (2/6)
CN21 (5/100) 5 TAPE_THICKNESS — TAPE_THICKNESS 3 CN5 (3/6)
CN21 (6/100) 6 REEL_HUB — REEL_HUB 4 CN5 (4/6)
CN21 (84/100) 84 H-REC_INHIBIT — H-REC_INHIBIT 5 CN5 (5/6)
CN21 (17/100) 17 CASSETTE_IN — CASSETTE_IN 6 CN5 (6/6)
B2
CN6 JST 12P STR
CN21 (8/100) 8 FUNC_CAN_0 — FUNC_CAN_0 1 CN6 (1/12)
CN21 (7/100) 7 FUNC_CAN_1 — FUNC_CAN_1 2 CN6 (2/12)
CN21 (10/100) 10 FUNC_CAN_2 — FUNC_CAN_2 3 CN6 (3/12)
CN21 (9/100) 9 FUNC_CAN_3 — FUNC_CAN_3 4 CN6 (4/12)
CN21 (82/100) 82 L-HUMID_DET — L-HUMID_DET 5 CN6 (5/12)
CN21 (12/100) 12 S_REEL_FG — S-REEL_FG 6 CN6 (6/12)
CN21 (11/100) 11 T_REEL_FG — T-REEL_FG 7 CN6 (7/12)
CN21 (18/100) 18 CASSETTE_LOCK — CASSETTE_LOCK 8 CN6 (8/12)
CN21 (15/100) 15 TAPE_TOP/END_SEL — +5V 9 CN6 (9/12)
CN21 (16/100) 16 TAPE_TOP/END_DET — GND 10 CN6 (10/12)
TOP/END_SEL 11 CN6 (11/12)
TOP/END_X 12 CN6 (12/12)
B4
CN10 JST 8P STR
CN21 (83/100) 83 MOTOR_GND — DRUM_GND 8 CN10 (8/8)
CN21 (85/100) 85 MOTOR_GND — DRUM_CURRENT_X 5 CN10 (5/8)
CN21 (77/100) 77 DRUM_CURRENT_G — DRUM_F/R_CONT. 6 CN10 (6/8)
CN21 (80/100) 80 DRUM_CURRENT_X — DRUM_DRIVE 7 CN10 (7/8)
CN21 (74/100) 74 DRUM_F/R_CONT — +5V 4 CN10 (4/8)
CN21 (79/100) 79 DRUM_DRIVE — DRUM_PG 3 CN10 (3/8)
CN21 (81/100) 81 DRUM_DRIVE — DRUM_FG 2 CN10 (2/8)
CN21 (13/100) 13 DRUM_PG — GND 1 CN10 (1/8)
CN21 (14/100) 14 DRUM_FG
B5
Q1 2SK852-T1X2
Q2 2SC2982C-TE12L
D6 RD15B-T1B1
CN14 JST 9P STR
CN21 (1/100) 1 CAPSTAN_FG-B — CAPSTAN_FG_VCC 9 CN14 (9/9)
CN21 (2/100) 2 CAPSTAN_FG-A — CAPSTAN_FG_B 8 CN14 (8/9)
CN21 (78/100) 78 CAPSTAN_DRIVE — CAPSTAN_FG_A 7 CN14 (7/9)
CN21 (71/100) 71 CAPSTAN_R/F_CONT — CAPSTAN_FG_GND 6 CN14 (6/9)
CN21 (75/100) 75 CAPSTAN_DRIVE_GND — CAPSTAN_DRIVE 5 CN14 (5/9)
CN21 (96/100) 96 UNREG_+12V — CAPSTAN_R/F_CONT 4 CN14 (4/9)
CN21 (69/100) 69 L-CAPSTAN_ST-BY — CAPSTAN_DRIVE_GND 3 CN14 (3/9)
UNREG_+12V 2 CN14 (2/9)
L-CAPSTAN_ST-BY 1 CN14 (1/9)
CN21 (76/100) 76 LOADING_DRIVE_1
CN21 (73/100) 73 LOADING_DRIVE_2
L1 47UH
L2 47UH
C2 0.022uF
B3
CN11 JST 9P STR
LOADING_W_X 9 CN11 (9/9)
LOADING_W_Y 8 CN11 (8/9)
REC_CUE_G 7 CN11 (7/9)
REC_CUE_X 6 CN11 (6/9)
L-CUE/TC_REC 5 CN11 (5/9)
PB_CUE_X 4 CN11 (4/9)
+5V 3 CN11 (3/9)
GND 2 CN11 (2/9)
-5V 1 CN11 (1/9)
CN21 (88/100) 88 REC_CUE_G
CN21 (89/100) 89 REC_CUE_X
CN21 (90/100) 90 PB_CUE_X
B6
CN7 JST 8P ANGL
CN21 (34/100) 34 PG_ADJ_REF — PG_ADJ_REF 3 CN7 (3/8)
CN21 (72/100) 72 SERVO_REF_CF — PB_TC 4 CN7 (4/8)
PB_CUE 5 CN7 (5/8)
SERVO_REF_CF 6 CN7 (6/8)
GND 8 CN7 (8/8)
RV1 100k
RB1 100k
C1 0.022uF
CN21 (31/100) 31 SV_ADJ_RV_X
CN21 (36/100) 36 SV_ADJ_RV_G
CN21 (26/100) 26 PUSH_SW_1
CN21 (25/100) 25 PUSH_SW_2
CN21 (24/100) 24 DIP_SW_1
CN21 (23/100) 23 DIP_SW_2
R1 220k
R2 220k
R3 220k
RB2 10k
CN21 (27/100) 27 NV_SI
CN21 (28/100) 28 NV_SO
CN21 (30/100) 30 NV_SCK
CN21 (29/100) 29 NV_CE
S3
S2
S1 (1/2)
S1 (2/2)
D7 CL-150UR-CD-T
D8 CL-150UR-CD-T
R76 330
R77 330
D10 CL-150UR-CD-T
D11 CL-150UR-CD-T
D12 CL-150UR-CD-T
D13 CL-150UR-CD-T
RB3 330
CN21 (20/100) 20 SV_ADJ_LED_0
CN21 (19/100) 19 SV_ADJ_LED_1
CN21 (22/100) 22 SV_ADJ_LED_2
CN21 (21/100) 21 SV_ADJ_LED_3
IC10 BR9020F-E2
C3 0.022uF
DI
CS
SK
WC
R/B
VCC
DO
GND
IC11 TC7SH08FU-TE85R
CN21 (95/100) 95 +5V_A
CN21 (98/100) 98 -5V_A
CN21 (97/100) 97 GND
CN21 (99/100) 99 GND
CN21 (100/100) 100 GND
Note
NM:No Mount
CN1 JAE 12P STR
CN21 (37/100) 37 PB_AE_RF_X — PB_AE_X 1 CN1 (1/12)
CN21 (38/100) 38 PB_AE_RF_Y — PB_AE_Y 7 CN1 (7/12)
CN21 (39/100) 39 PB_AE_RF_G — PB_AE_G 8 CN1 (8/12)
CN21 (40/100) 40 PB_BF_RF_X — PB_BF_X 9 CN1 (9/12)
CN21 (41/100) 41 PB_BF_RF_Y — PB_BF_Y 2 CN1 (2/12)
CN21 (42/100) 42 PB_BF_RF_G — PB_BF_G 3 CN1 (3/12)
CN21 (43/100) 43 PB_CG_RF_X — PB_CG_X 4 CN1 (4/12)
CN21 (44/100) 44 PB_CG_RF_Y — PB_CG_Y 10 CN1 (10/12)
CN21 (45/100) 45 PB_CG_RF_G — PB_CG_G 11 CN1 (11/12)
CN21 (46/100) 46 PB_DH_RF_X — PB_DH_X 12 CN1 (12/12)
CN21 (47/100) 47 PB_DH_RF_Y — PB_DH_Y 5 CN1 (5/12)
CN21 (48/100) 48 PB_DH_RF_G — PB_DH_G 6 CN1 (6/12)
S4 (1/4)
S4 (2/4)
S4 (3/4)
S4 (4/4)
TEST
REC
CN2 JAE 18P STR
CN21 (51/100) 51 REC_AE_DATA_X — REC_AE_X 10 CN2 (10/18)
CN21 (52/100) 52 REC_AE_DATA_Y — REC_AE_Y 1 CN2 (1/18)
CN21 (49/100) 49 GND — REC_AE_G 11 CN2 (11/18)
CN21 (53/100) 53 REC_BF_DATA_X — REC_BF_X 2 CN2 (2/18)
CN21 (54/100) 54 REC_BF_DATA_Y — REC_BF_Y 12 CN2 (12/18)
CN21 (50/100) 50 GND — REC_BF_G 3 CN2 (3/18)
CN21 (55/100) 55 REC_CG_DATA_X — REC_CG_X 13 CN2 (13/18)
CN21 (56/100) 56 REC_CG_DATA_Y — REC_CG_Y 4 CN2 (4/18)
CN21 (59/100) 59 GND — REC_CG_G 14 CN2 (14/18)
CN21 (57/100) 57 REC_DH_DATA_X — REC_DH_X 5 CN2 (5/18)
CN21 (58/100) 58 REC_DH_DATA_Y — REC_DH_Y 15 CN2 (15/18)
CN21 (60/100) 60 GND — REC_DH_G 6 CN2 (6/18)
CN21 (61/100) 61 WPX_X — WPX_X 16 CN2 (16/18)
CN21 (62/100) 62 WPX_Y — WPX_Y 7 CN2 (7/18)
CN21 (63/100) 63 WPX_CK_X — WPX_G 17 CN2 (17/18)
CN21 (64/100) 64 WPX_CK_Y — WPX_CK_X 8 CN2 (8/18)
WPX_CK_Y 18 CN2 (18/18)
WPX_CK_G 9 CN2 (9/18)

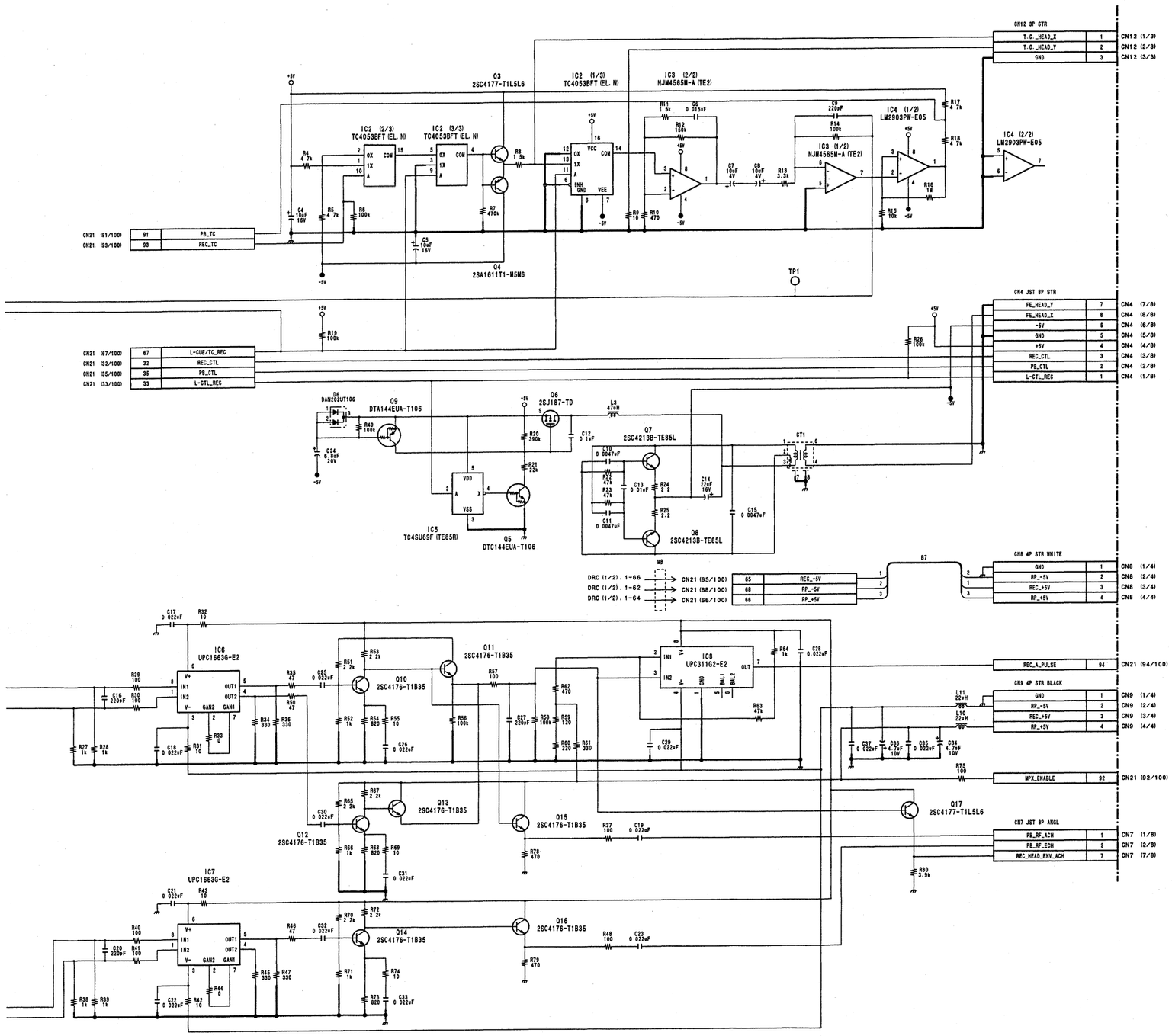

HN-260
LOT NO. 810-

TC-101 (1/6)

DVW-707 (J) : S/N 30011 and Higher
DVW-707 (SY) : S/N 10056 and Higher
DVW-707P : S/N 40121 and Higher

DVW-709WS (J) : S/N 30006 and Higher
DVW-709WS (SY) : S/N 10106 and Higher
DVW-709WSP : S/N 40191 and Higher

DVW-790WS (J) : S/N 30006 and Higher
DVW-790WS (SY) : S/N 10091 and Higher
DVW-790WSP : S/N 40336 and Higher

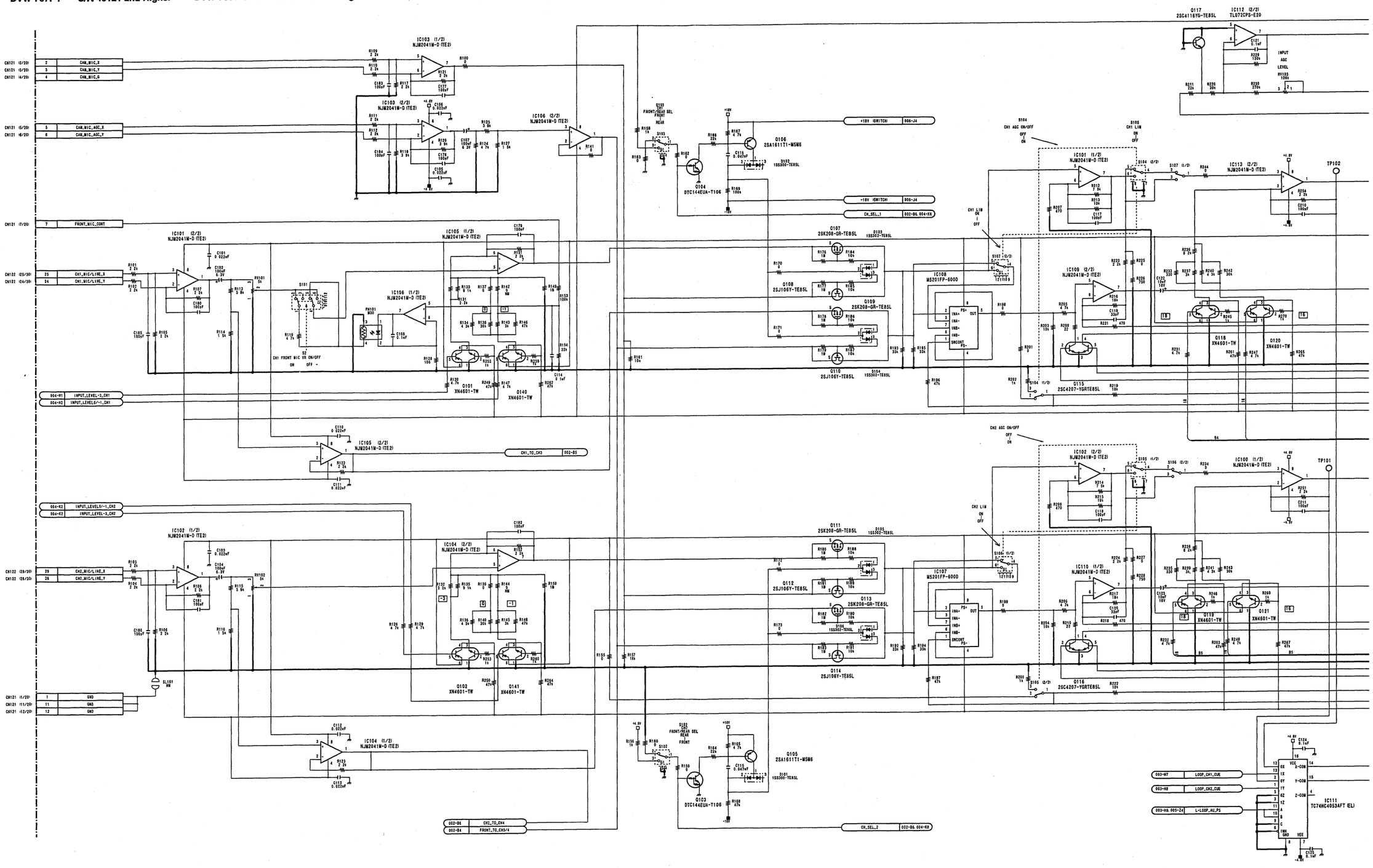

4-78 (b)

4-78 (b)

DVW-790WS/709WS/707
DVW-790WSP/709WSP/707P P2V2

TC-101 (1/6)

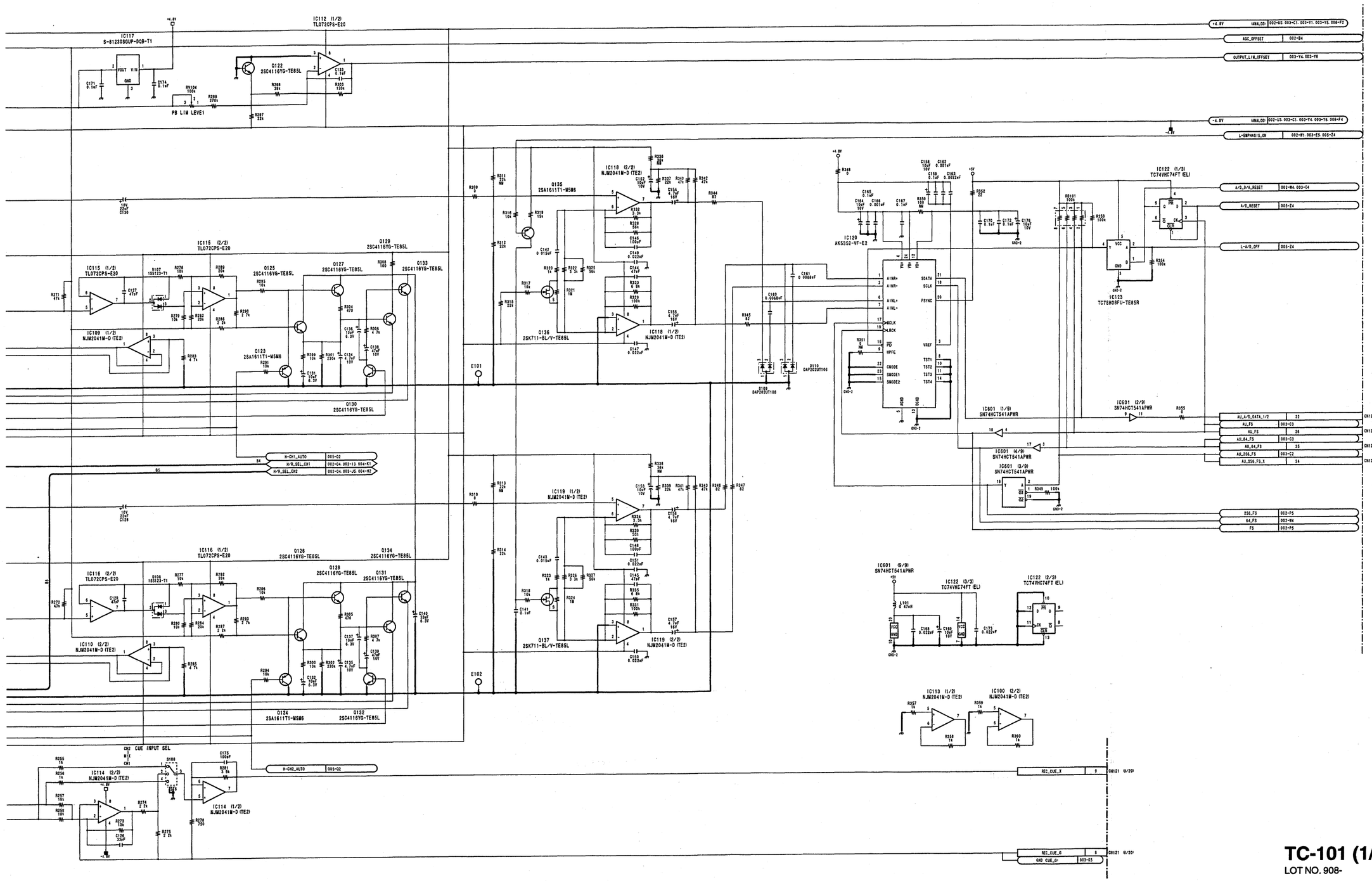

TC-101 (1/6)
LOT NO. 908-

TC-101 (2/6)

DVW-707 (J) : S/N 30011 and Higher
DVW-707 (SY) : S/N 10056 and Higher
DVW-707P : S/N 40121 and Higher

DVW-709WS (J) : S/N 30006 and Higher
DVW-709WS (SY) : S/N 10106 and Higher
DVW-709WSP : S/N 40191 and Higher

DVW-790WS (J) : S/N 30006 and Higher
DVW-790WS (SY) : S/N 10091 and Higher
DVW-790WSP : S/N 40336 and Higher

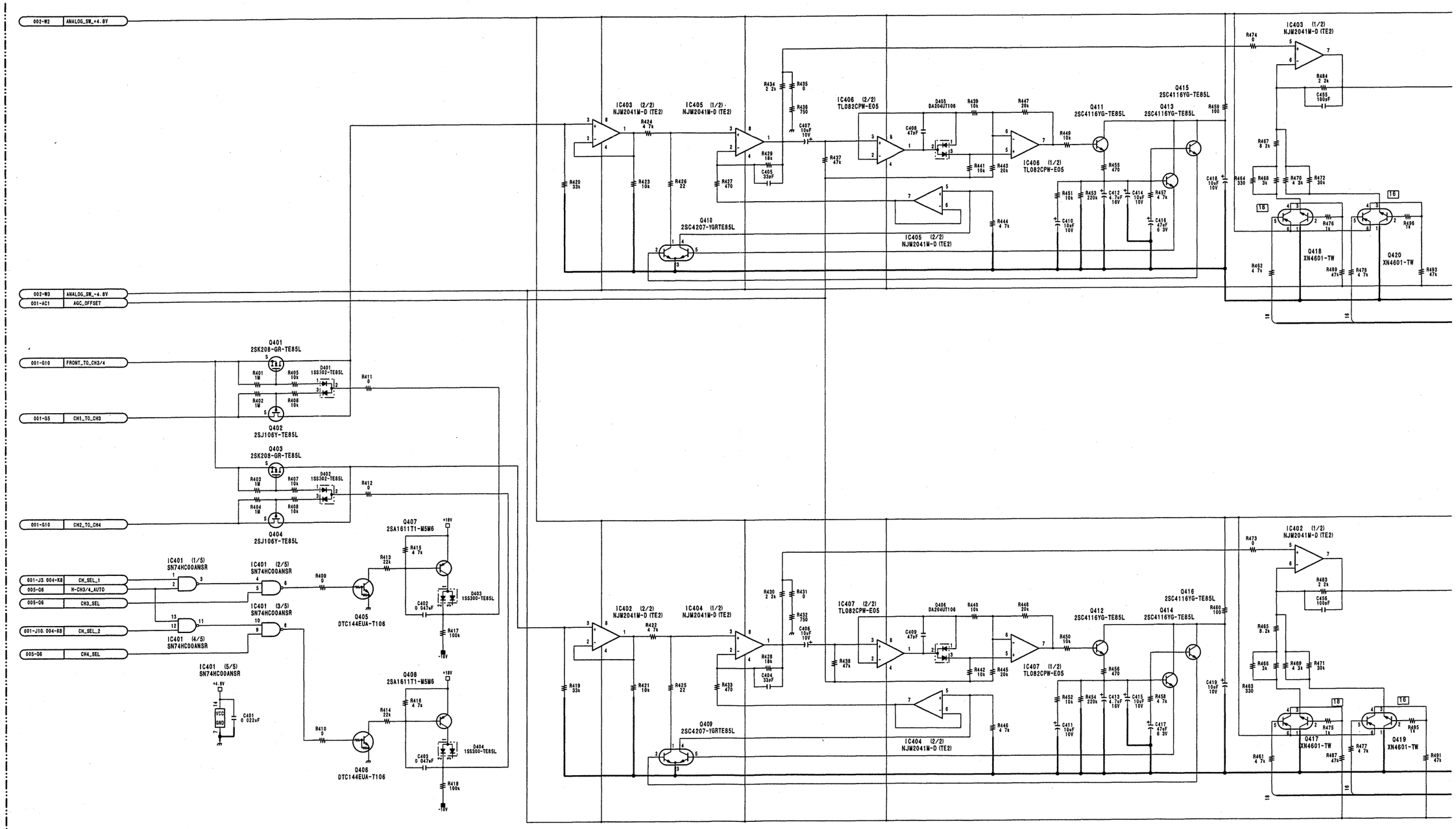

4-80 (b)

TC-101 (2/6)

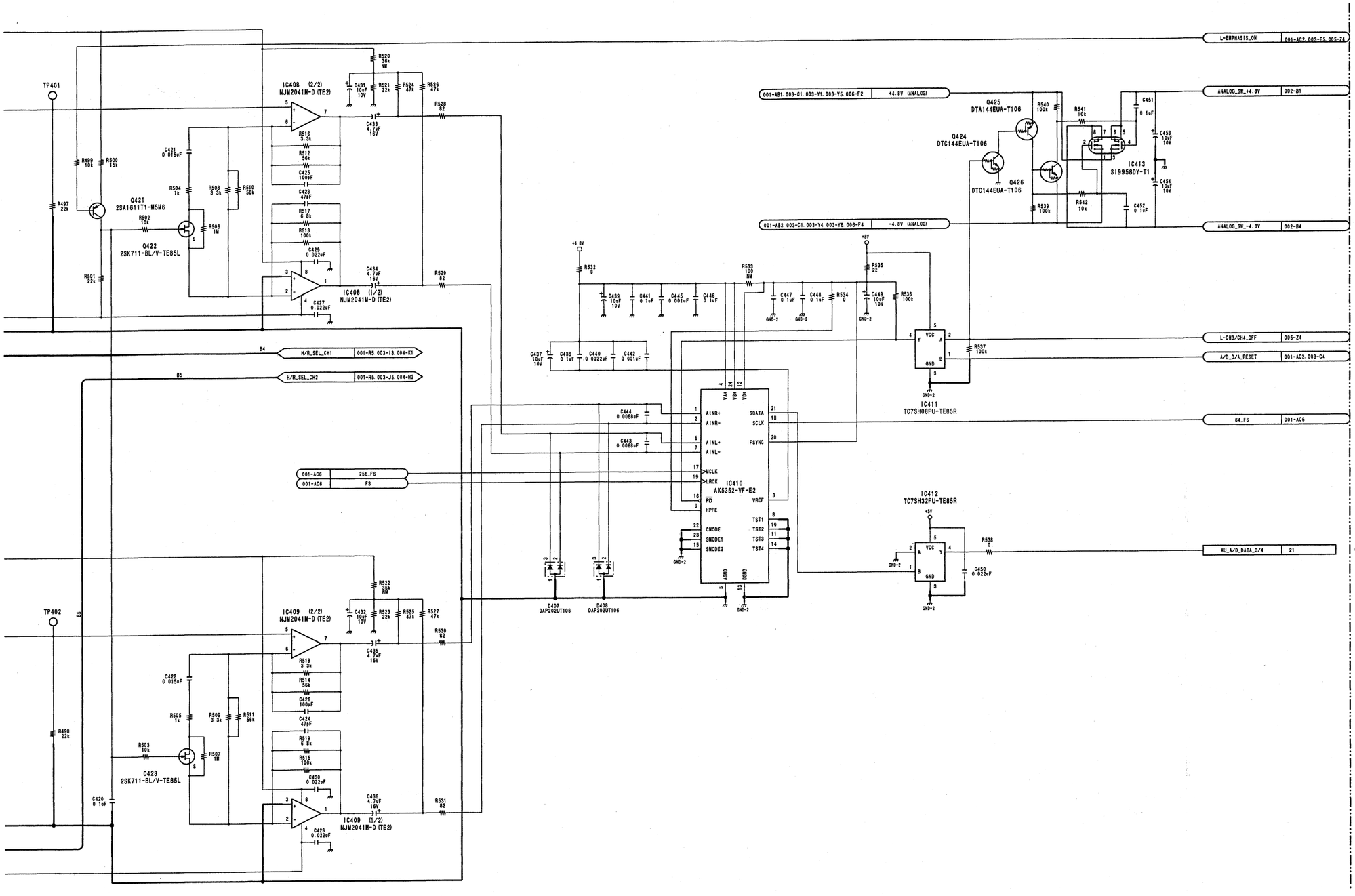

TC-101 (2/6)
LOT NO. 908-

TC-101 (3/6)

DVW-707 (J) : S/N 30011 and Higher
DVW-707 (SY) : S/N 10056 and Higher
DVW-707P : S/N 40121 and Higher

DVW-709WS (J) : S/N 30006 and Higher
DVW-709WS (SY) : S/N 10106 and Higher
DVW-709WSP : S/N 40191 and Higher

DVW-790WS (J) : S/N 30006 and Higher
DVW-790WS (SY) : S/N 10091 and Higher
DVW-790WSP : S/N 40336 and Higher

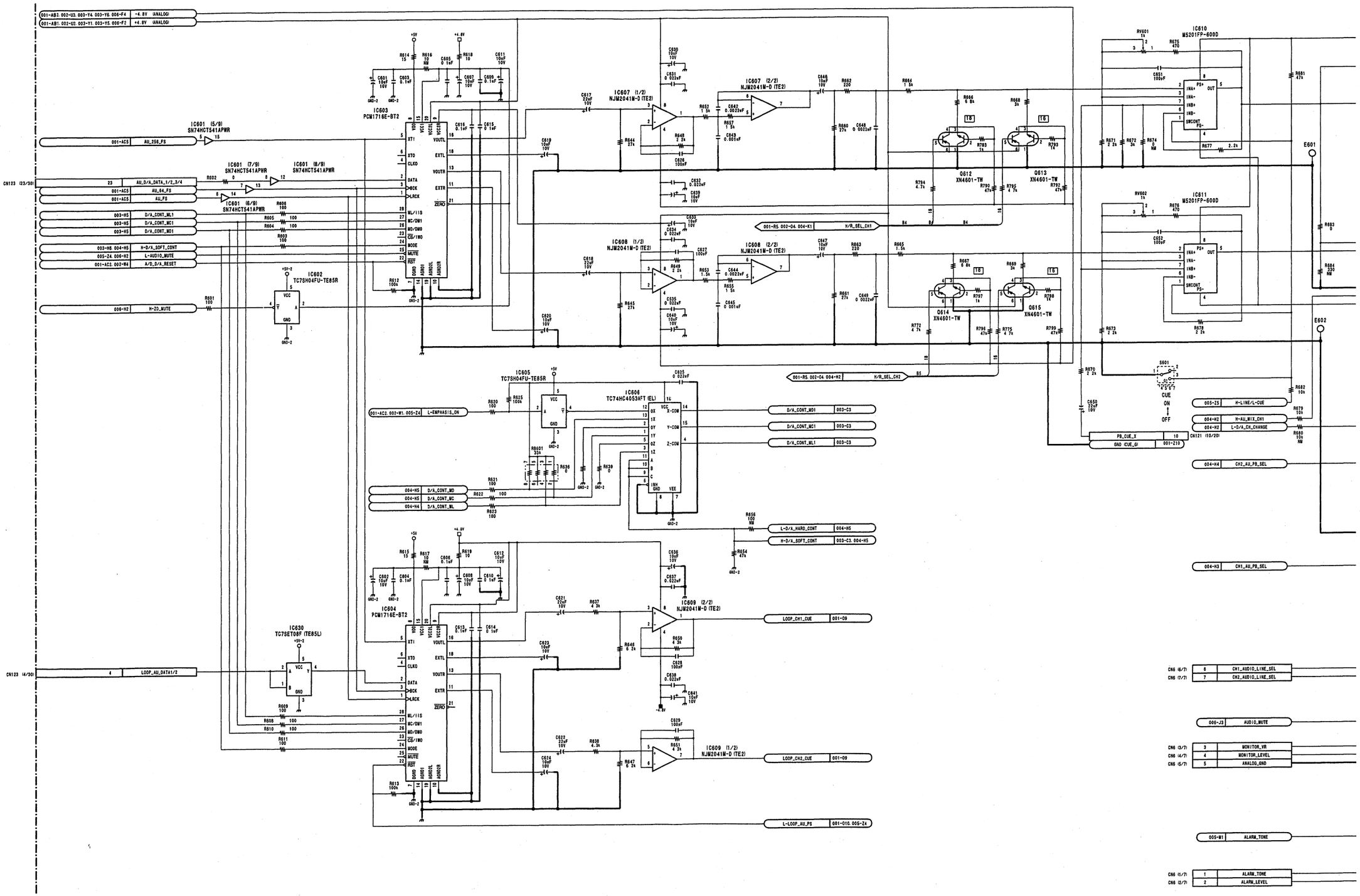

4-82 (b)

DVW-790WS/709WS/707
DVW-790WSP/709WSP/707P P2V2

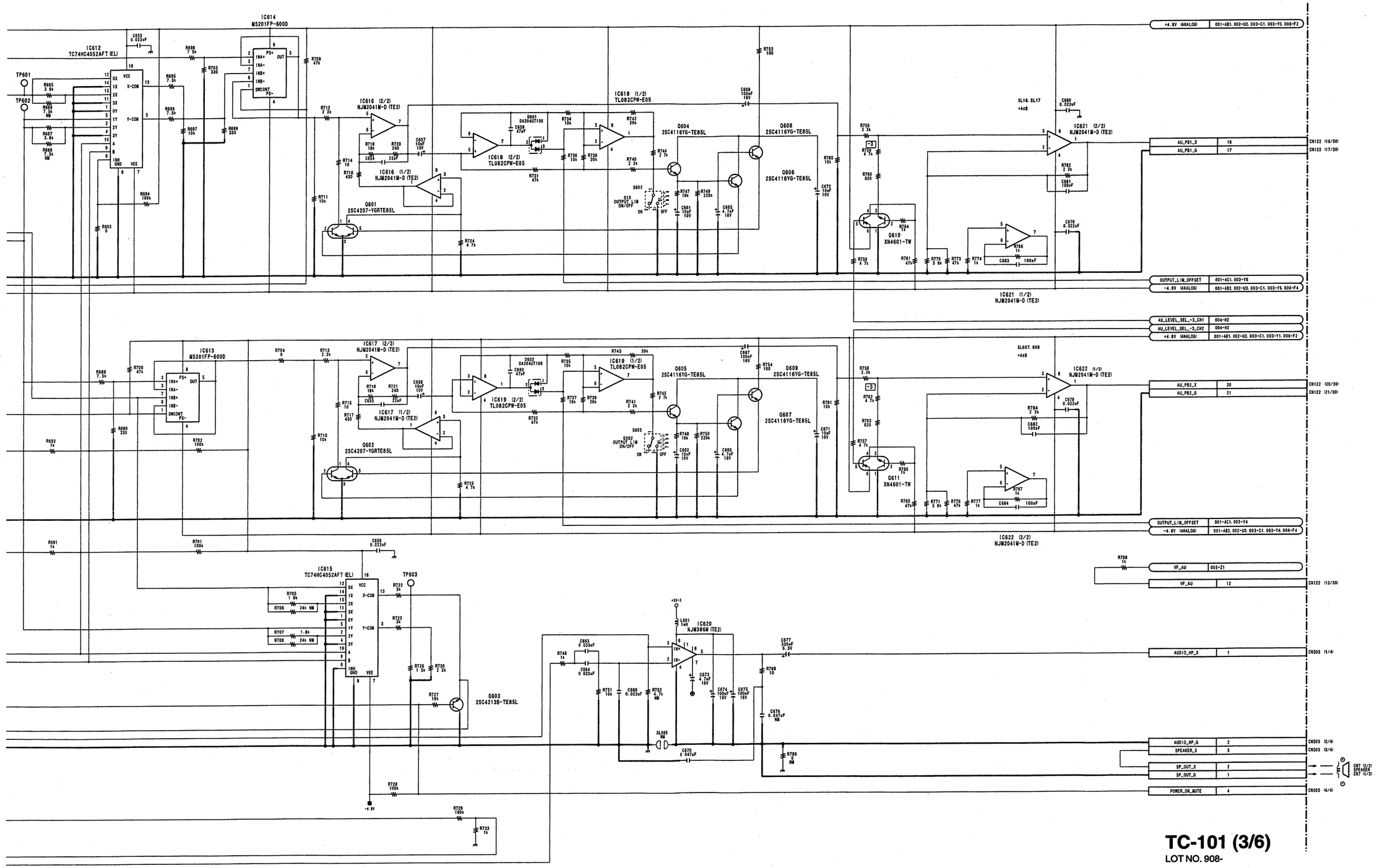

TC-101 (3/6)
LOT NO. 908-

DVW-790WS/709WS/707
DVW-790WSP/709WSP/707P P2V2

4-83 (b) 4-83 (b)

-SP1386 / DRUCK 99

TC-101 (4/6)

DVW-707 (J) : S/N 30011 and Higher
DVW-707 (SY) : S/N 10056 and Higher
DVW-707P : S/N 40121 and Higher

DVW-709WS (J) : S/N 30006 and Higher
DVW-709WS (SY) : S/N 10106 and Higher
DVW-709WSP : S/N 40191 and Higher

DVW-790WS (J) : S/N 30006 and Higher
DVW-790WS (SY) : S/N 10091 and Higher
DVW-790WSP : S/N 40336 and Higher

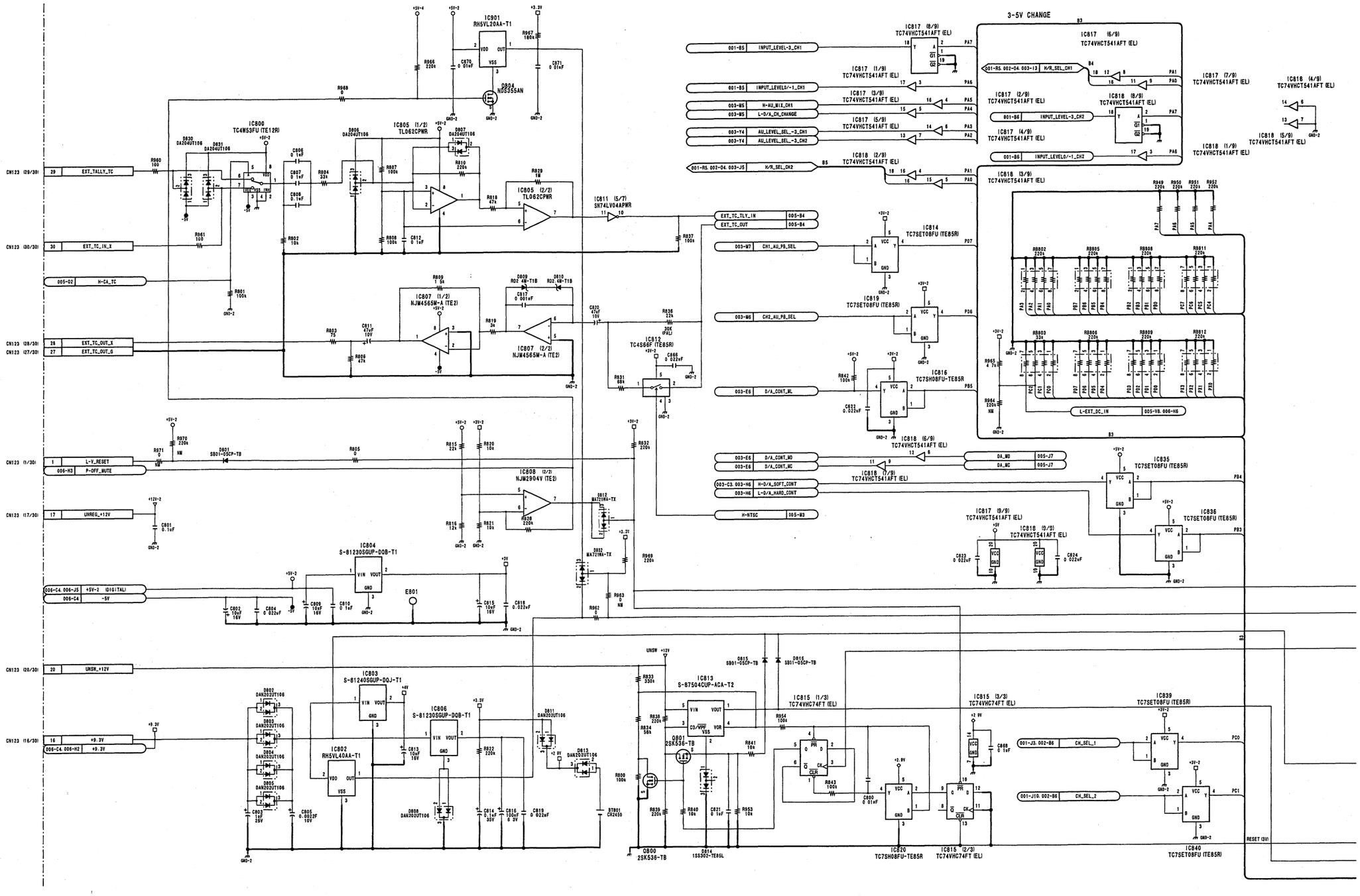

4-84 (b)

DVW-790WS/709WS/707
DVW-790WSP/709WSP/707P P2V2

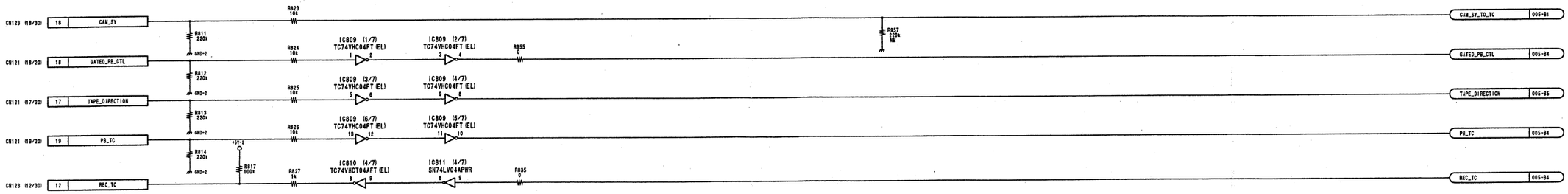

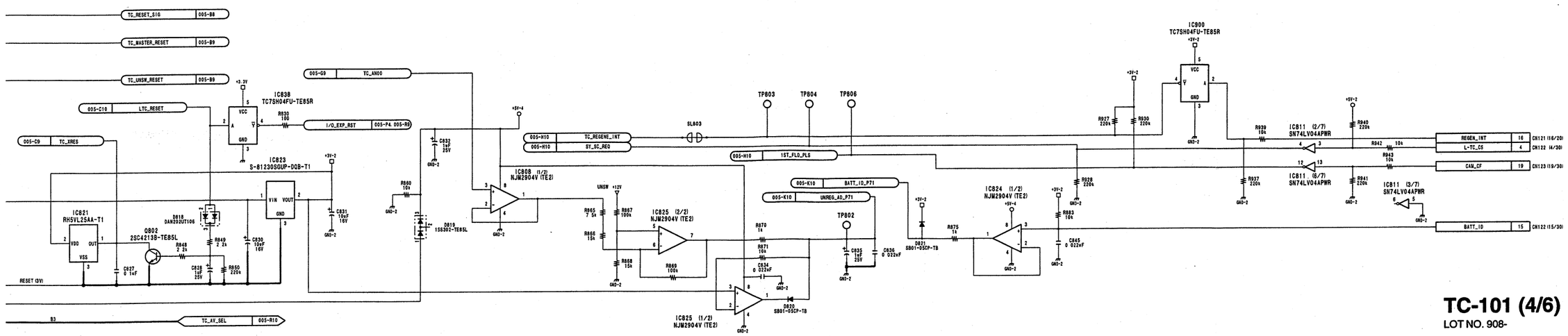

TC-101 (4/6)
LOT NO. 908-

DVW-790WS/709WS/707
DVW-790WSP/709WSP/707P P2V2

4-85 (b) 4-85 (b)

I | J | K | L | M | N | O | P

Y-SP1386 / DRUCK 101

DVW-707 (J) : S/N 30011 and Higher
DVW-707 (SY) : S/N 10056 and Higher
DVW-707P : S/N 40121 and Higher

DVW-709WS (J) : S/N 30006 and Higher
DVW-709WS (SY) : S/N 10106 and Higher
DVW-709WSP : S/N 40191 and Higher

DVW-790WS (J) : S/N 30006 and Higher
DVW-790WS (SY) : S/N 10091 and Higher
DVW-790WSP : S/N 40336 and Higher

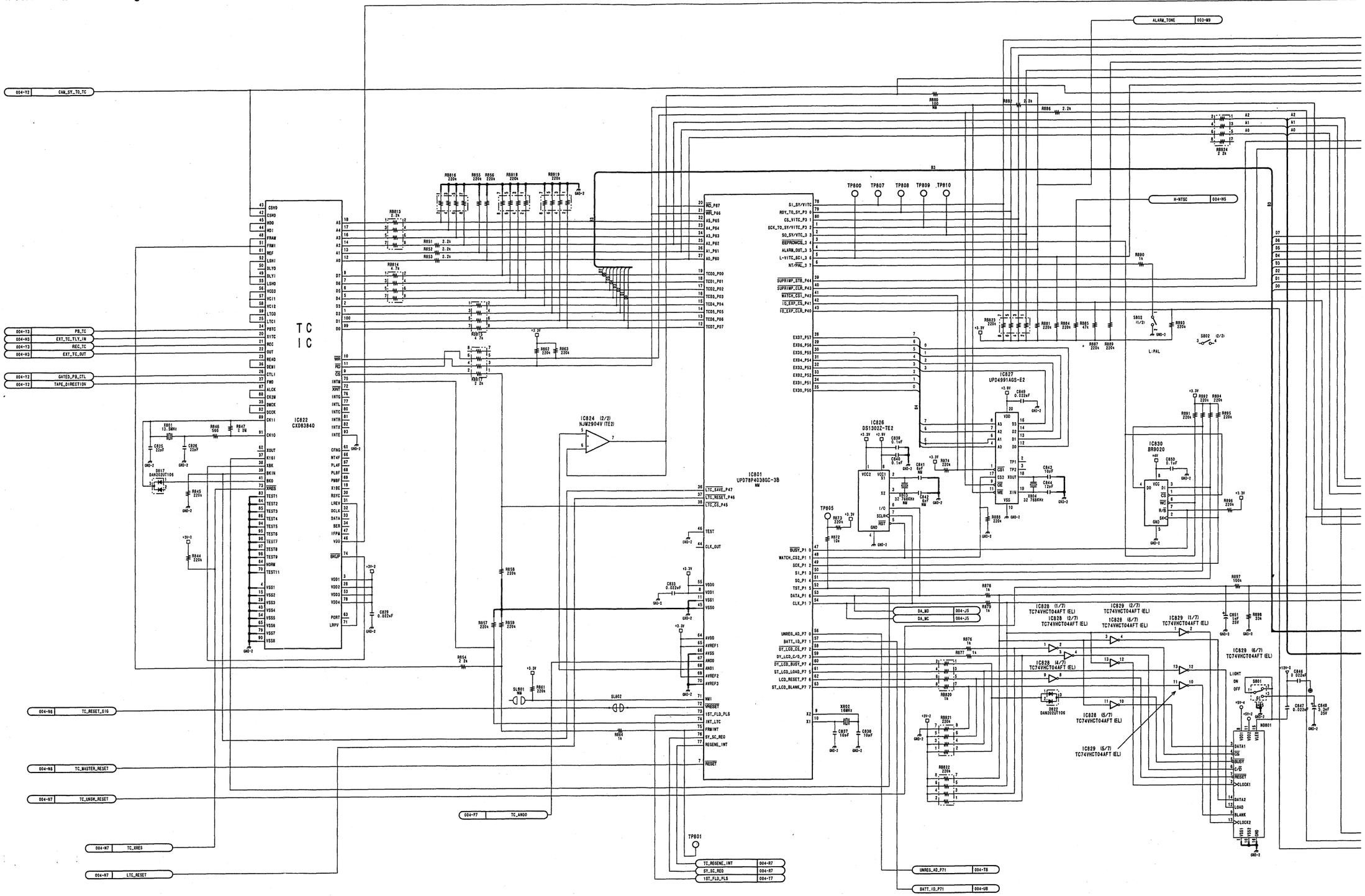

4-86 (b) 4-86 (b)

DVW-790WS/709WS/707
DVW-790WSP/709WSP/707P P2V2

SONY-SP1386 / DRUCK 102

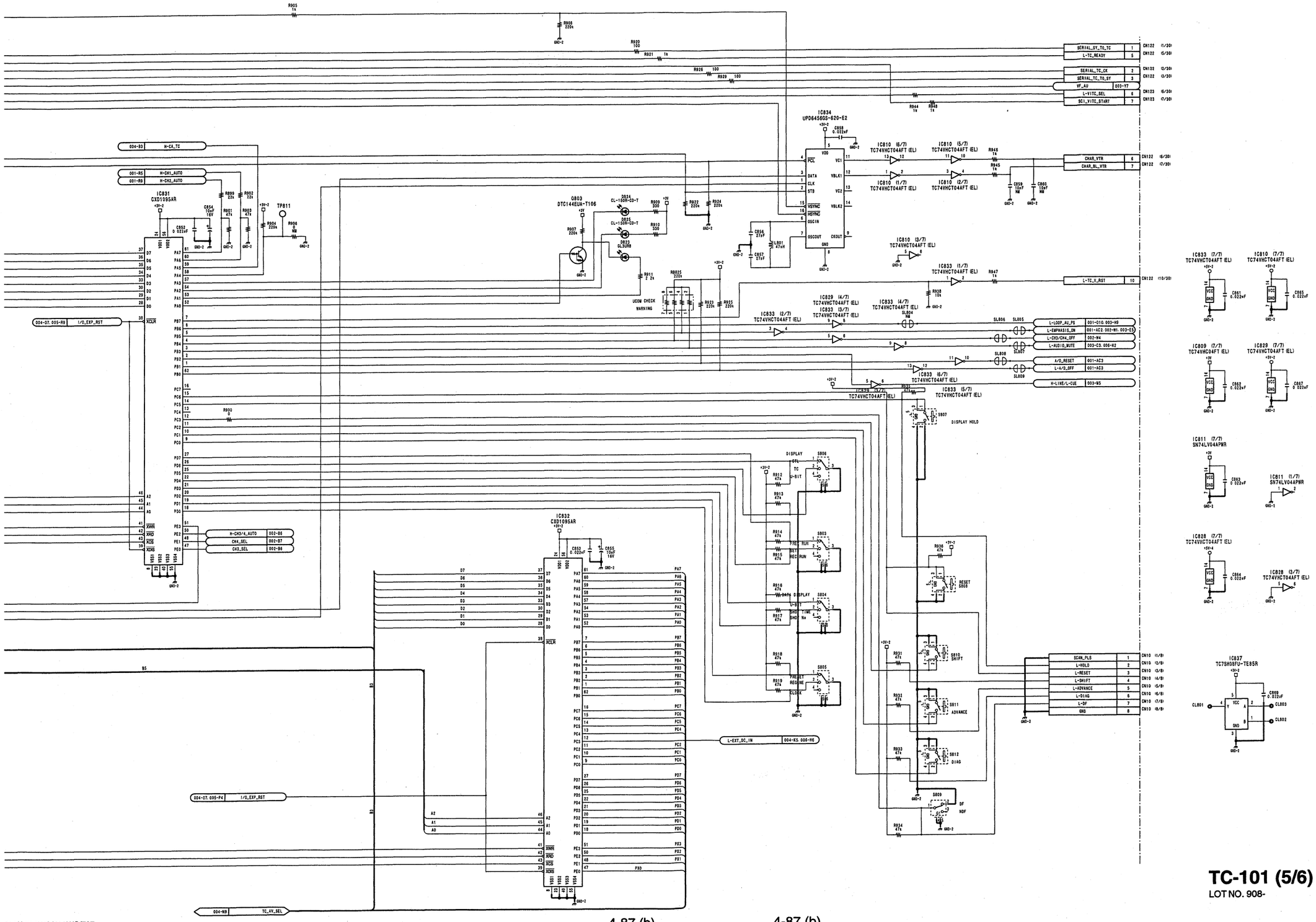

DVW-790WS/709WS/707
DVW-790WSP/709WSP/707P P2V2

4-87 (b) 4-87 (b)

TC-101 (5/6)
LOT NO. 908-

DVW-707 (J) : S/N 30001 through 30010
DVW-707 (SY) : S/N 10001 through 10055
DVW-707P : S/N 40001 through 40120

DVW-709WS (J) : S/N 30001 through 30005
DVW-709WS (SY) : S/N 10001 through 10105
DVW-709WSP : S/N 40001 through 40190

DVW-790WS (J) : S/N 30001 through 30005
DVW-790WS (SY) : S/N 10001 through 10090
DVW-790WSP : S/N 40001 through 40335

Note
NM:No Mount

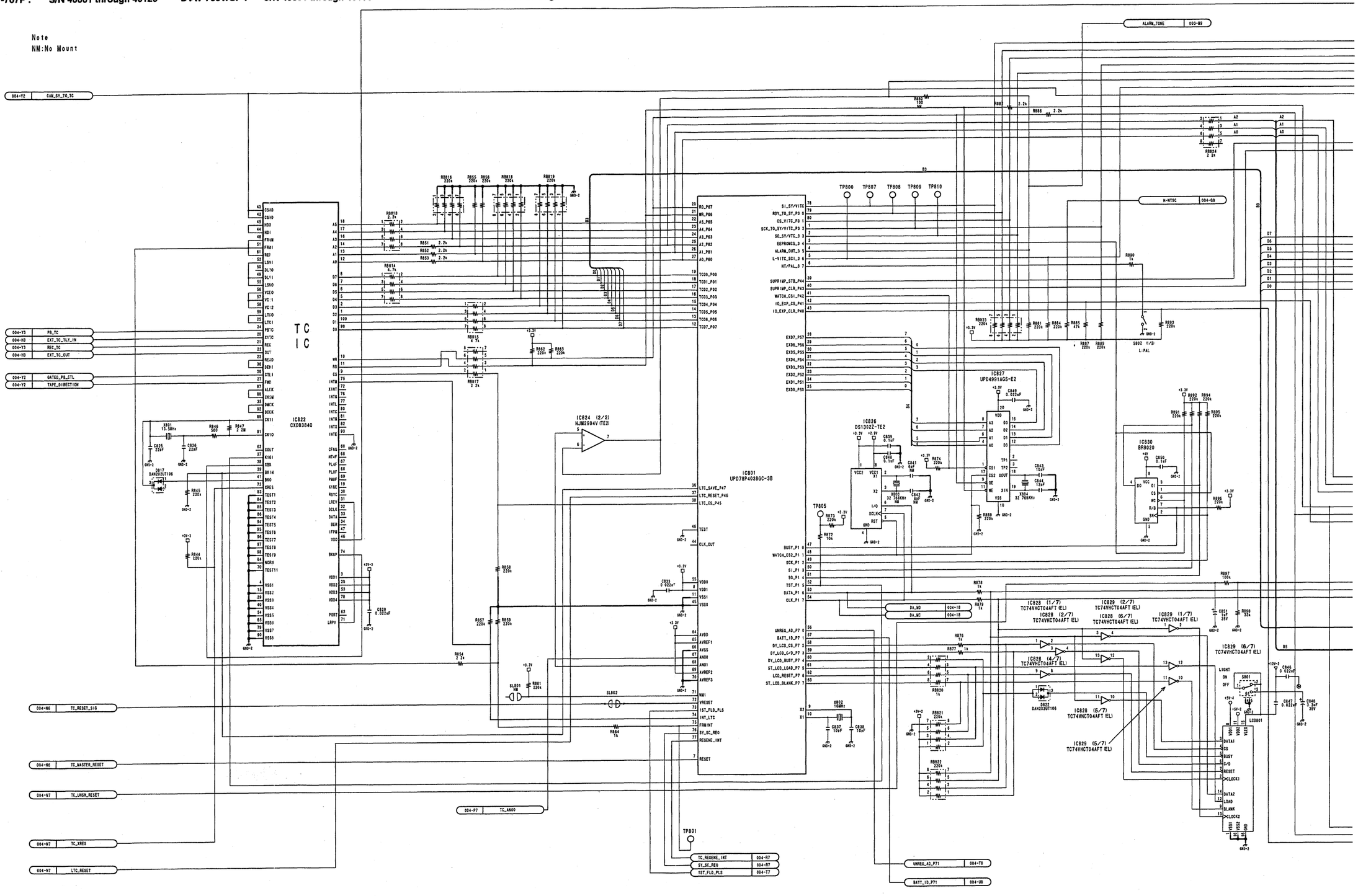

4-86 (a) 4-86 (a)

DVW-790WS/709WS/707
DVW-790WSP/709WSP/707P P2V2

MARK	CHANGED INFORMATION	SERIAL NO.
*1	IC806	10056 and higher (707 SY)
	S-81230SGUP-DQB-T1	30006 and higher (707 J/709WS J/790WS J)
	→ S-81233SGUP-DQF-T1	10086 and higher (709WS SY/790WS SY)
	D808 DAN202U → DELETED	40106 and higher (707P)
	R972 ADDED	40176and higher (709WSP)
		40266 and higher (790WSP)

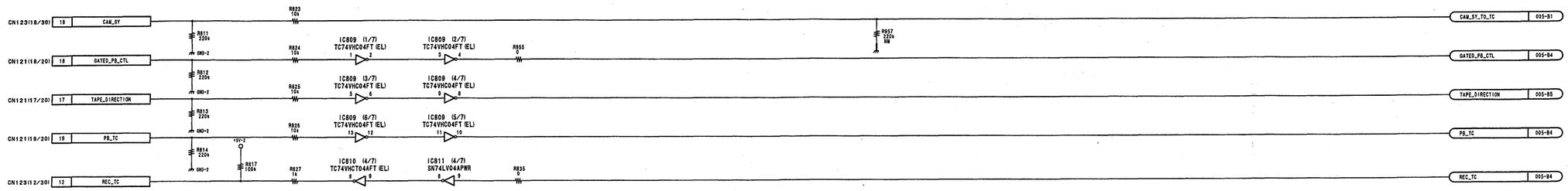

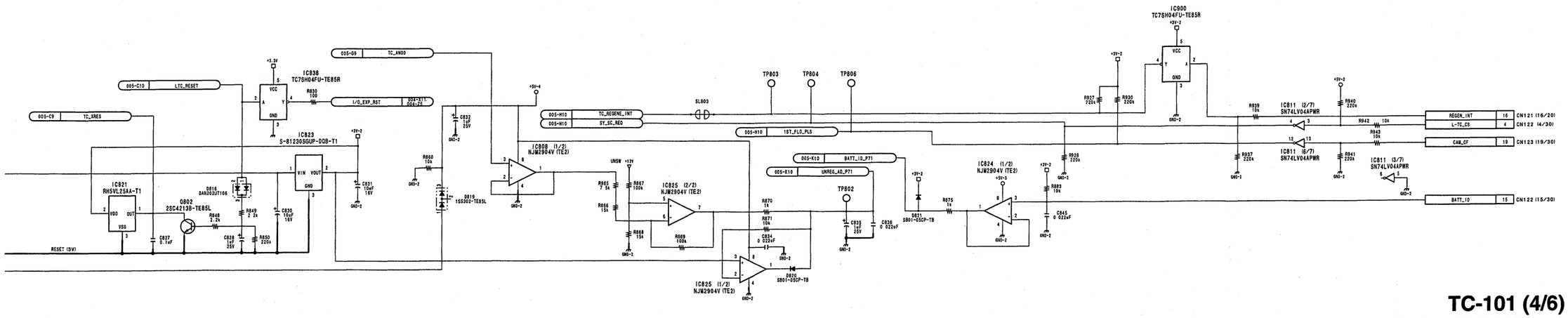

TC-101 (4/6)
LOT NO. 810-907

DVW-707 (J) : S/N 30001 through 30010
DVW-707 (SY) : S/N 10001 through 10055
DVW-707P : S/N 40001 through 40120

DVW-709WS (J) : S/N 30001 through 30005
DVW-709WS (SY) : S/N 10001 through 10105
DVW-709WSP : S/N 40001 through 40190

DVW-790WS (J) : S/N 30001 through 30005
DVW-790WS (SY) : S/N 10001 through 10090
DVW-790WSP : S/N 40001 through 40335

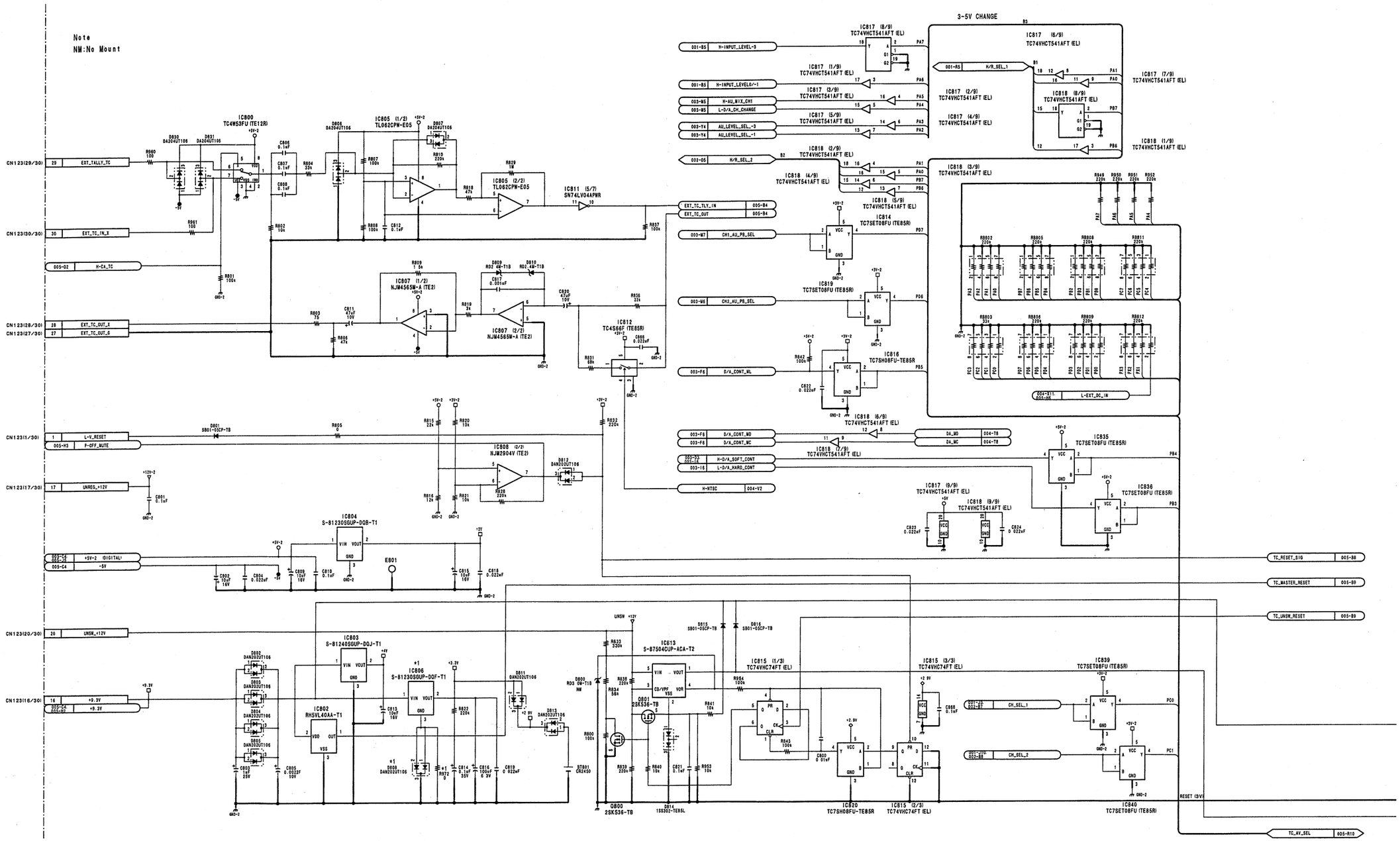

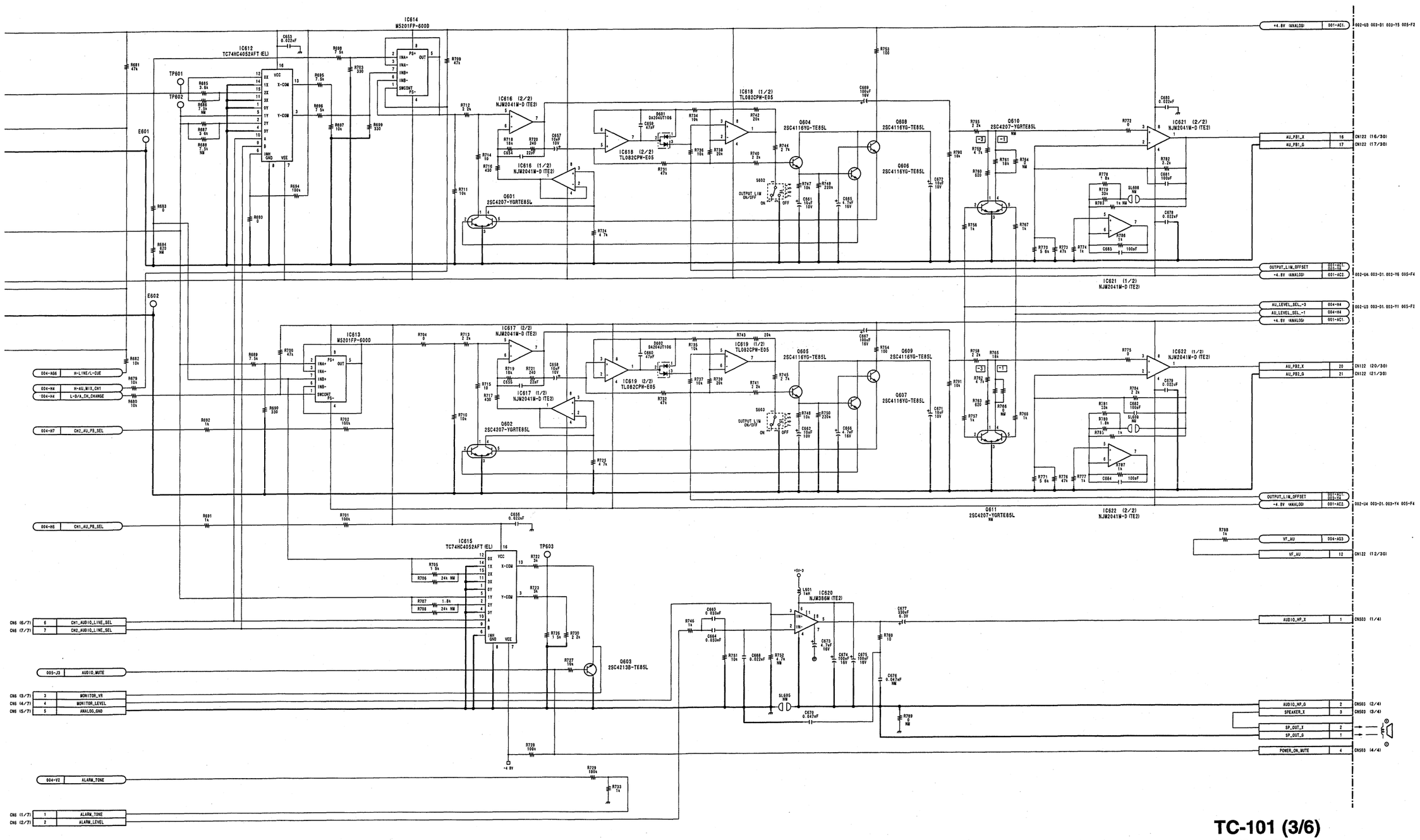

TC-101 (3/6)
LOT NO. 810-907

DVW-790WS/709WS/707
DVW-790WSP/709WSP/707P P2V2

4-83 (a) 4-83 (a)

TC-101 (3/6)

DVW-707 (J) : S/N 30001 through 30010
DVW-707 (SY) : S/N 10001 through 10055
DVW-707P : S/N 40001 through 40120

DVW-709WS (J) : S/N 30001 through 30005
DVW-709WS (SY) : S/N 10001 through 10105
DVW-709WSP : S/N 40001 through 40190

DVW-790WS (J) : S/N 30001 through 30005
DVW-790WS (SY) : S/N 10001 through 10090
DVW-790WSP : S/N 40001 through 40335

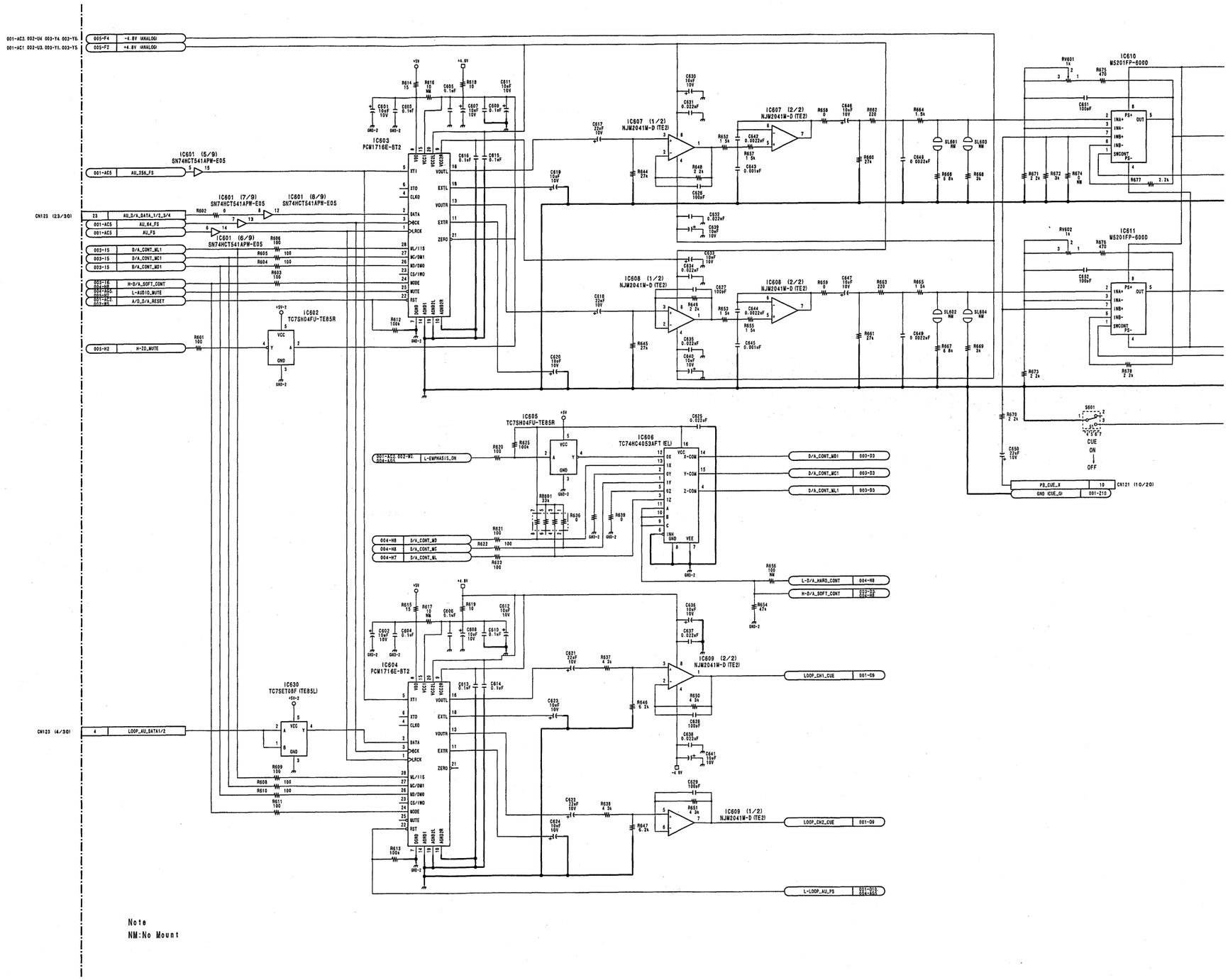

4-82 (a)

4-82 (a)

DVW-790WS/709WS/707
DVW-790WSP/709WSP/707P P2V2

TC-101 (2/6)

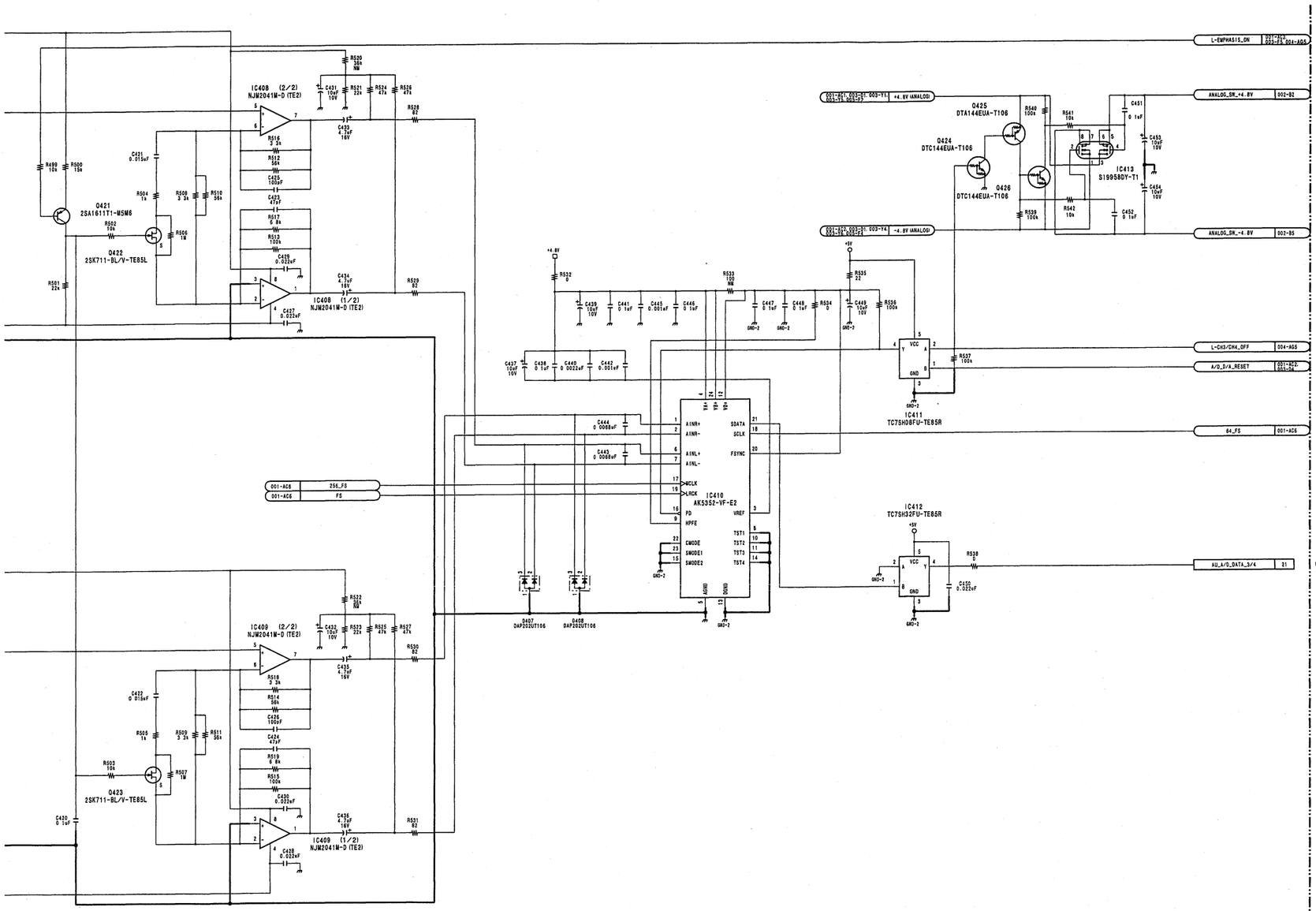

TC-101 (2/6)
LOT NO. 810-907

TC-101 (2/6)

DVW-707 (J) : S/N 30001 through 30010
DVW-707 (SY) : S/N 10001 through 10055
DVW-707P : S/N 40001 through 40120

DVW-709WS (J) : S/N 30001 through 30005
DVW-709WS (SY) : S/N 10001 through 10105
DVW-709WSP : S/N 40001 through 40190

DVW-790WS (J) : S/N 30001 through 30005
DVW-790WS (SY) : S/N 10001 through 10090
DVW-790WSP : S/N 40001 through 40335

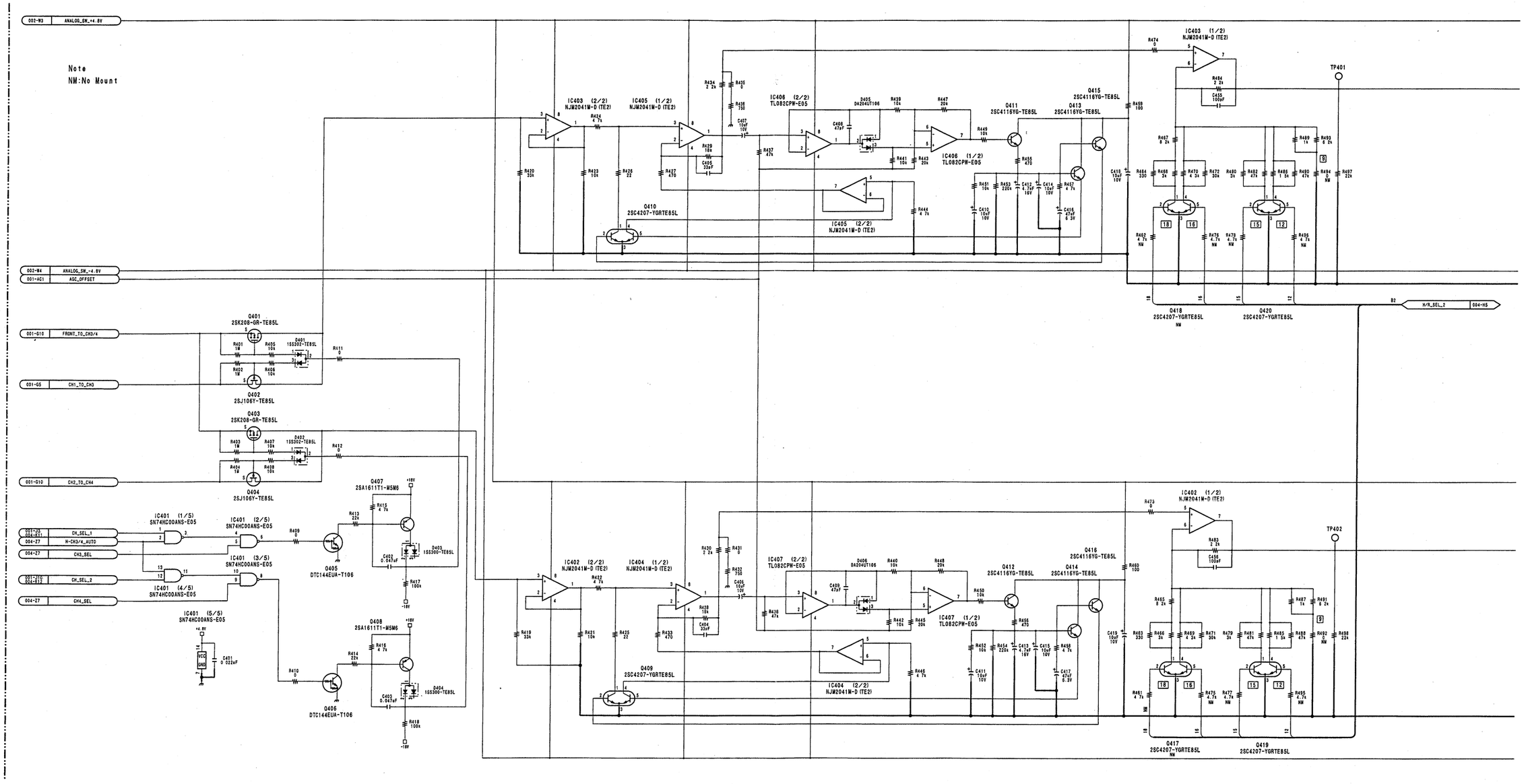

TC-101 (1/6)

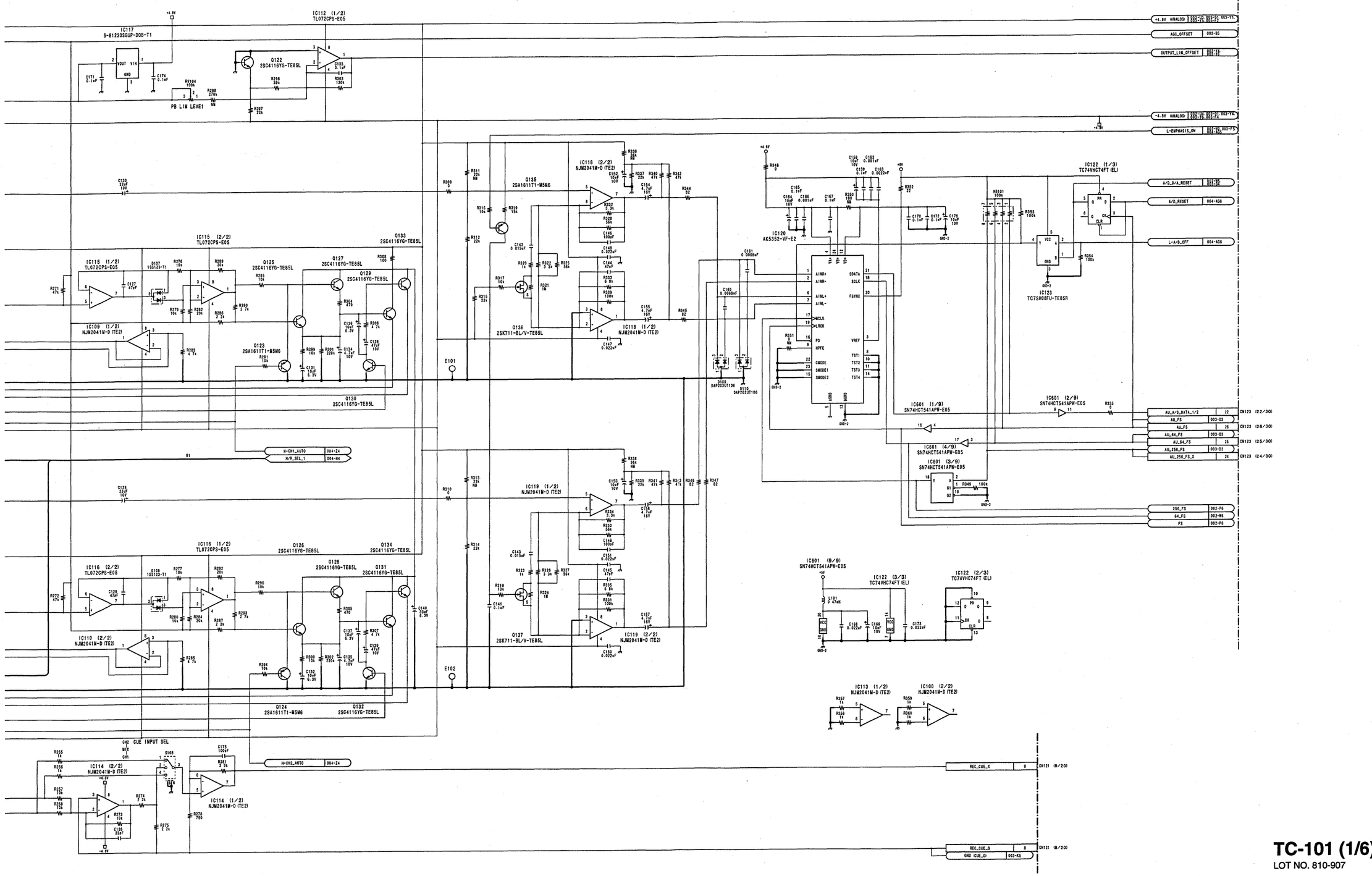

TC-101 (1/6)
LOT NO. 810-907

TC-101 (1/6)

TC-101 (1/6)

DVW-707 (J) : S/N 30001 through 30010
DVW-707 (SY) : S/N 10001 through 10055
DVW-707P : S/N 40001 through 40120

DVW-709WS (J) : S/N 30001 through 30005
DVW-709WS (SY) : S/N 10001 through 10105
DVW-709WSP : S/N 40001 through 40190

DVW-790WS (J) : S/N 30001 through 30005
DVW-790WS (SY) : S/N 10001 through 10090
DVW-790WSP : S/N 40001 through 40335

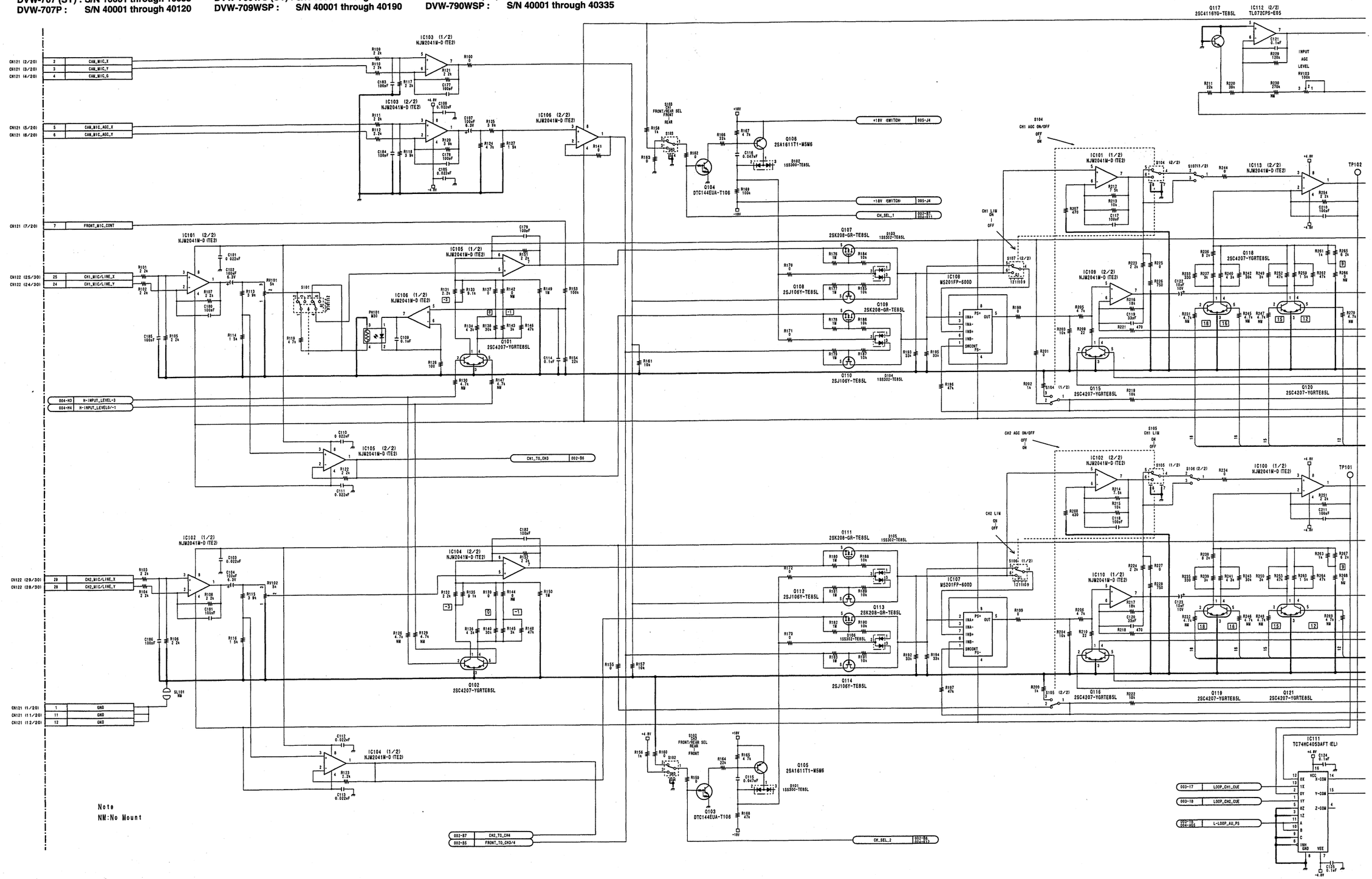

4-78 (a)

DVW-790WS/709WS/707
DVW-790WSP/709WSP/707P P2V2

TC-101 (6/6)

DVW-707 (J) : S/N 30011 and Higher
DVW-707 (SY) : S/N 10056 and Higher
DVW-707P : S/N 40121 and Higher

DVW-709WS (J) : S/N 30006 and Higher
DVW-709WS (SY) : S/N 10106 and Higher
DVW-709WSP : S/N 40191 and Higher

DVW-790WS (J) : S/N 30006 and Higher
DVW-790WS (SY) : S/N 10091 and Higher
DVW-790WSP : S/N 40336 and Higher

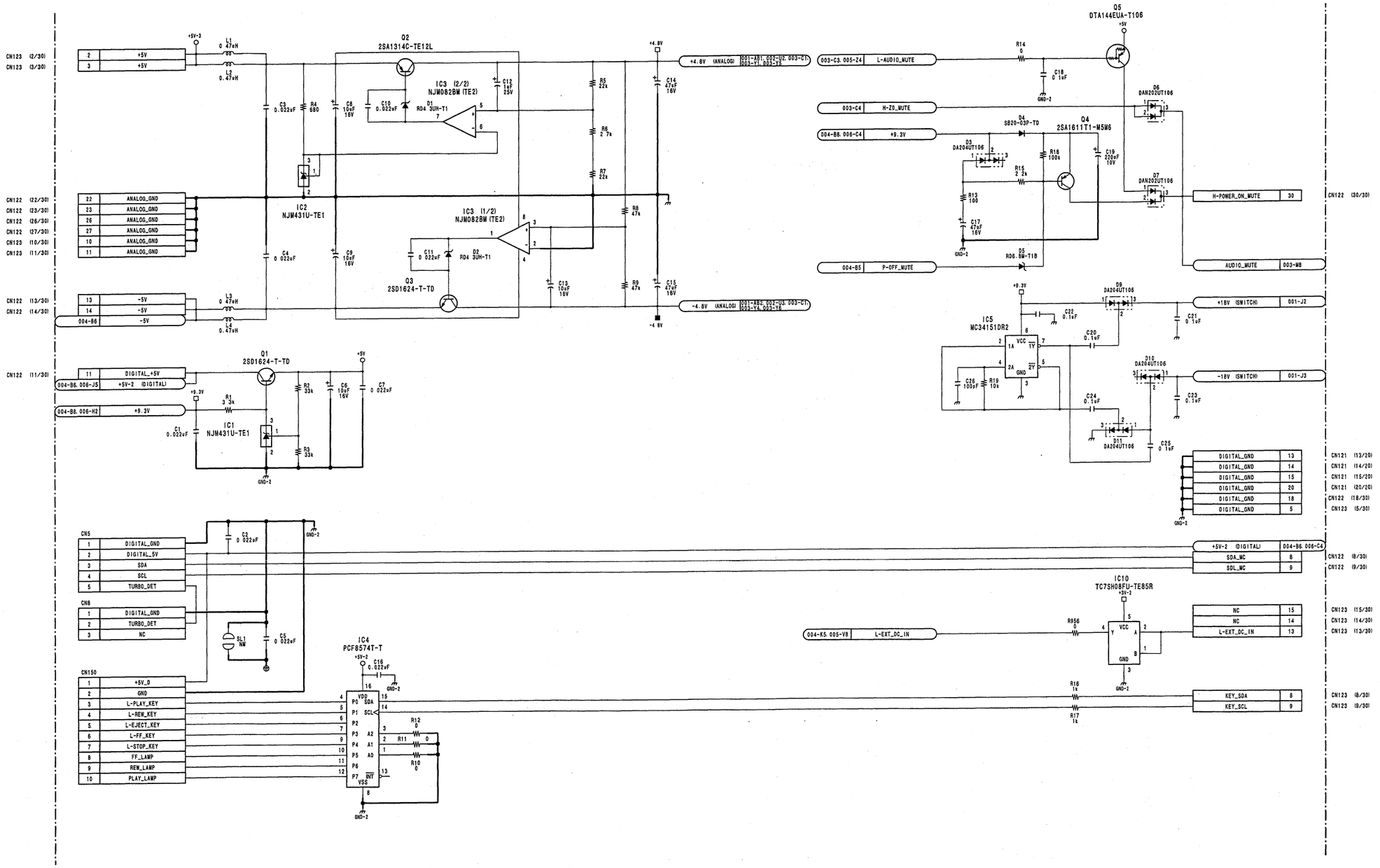

TC-101 (6/6)

LOT NO. 908-

DVW-790WS/709WS/707
DVW-790WSP/709WSP/707P P2V2

4-89 (b)

4-89 (b)

-SP1386 / DRUCK 105

TC-101 (5/6)

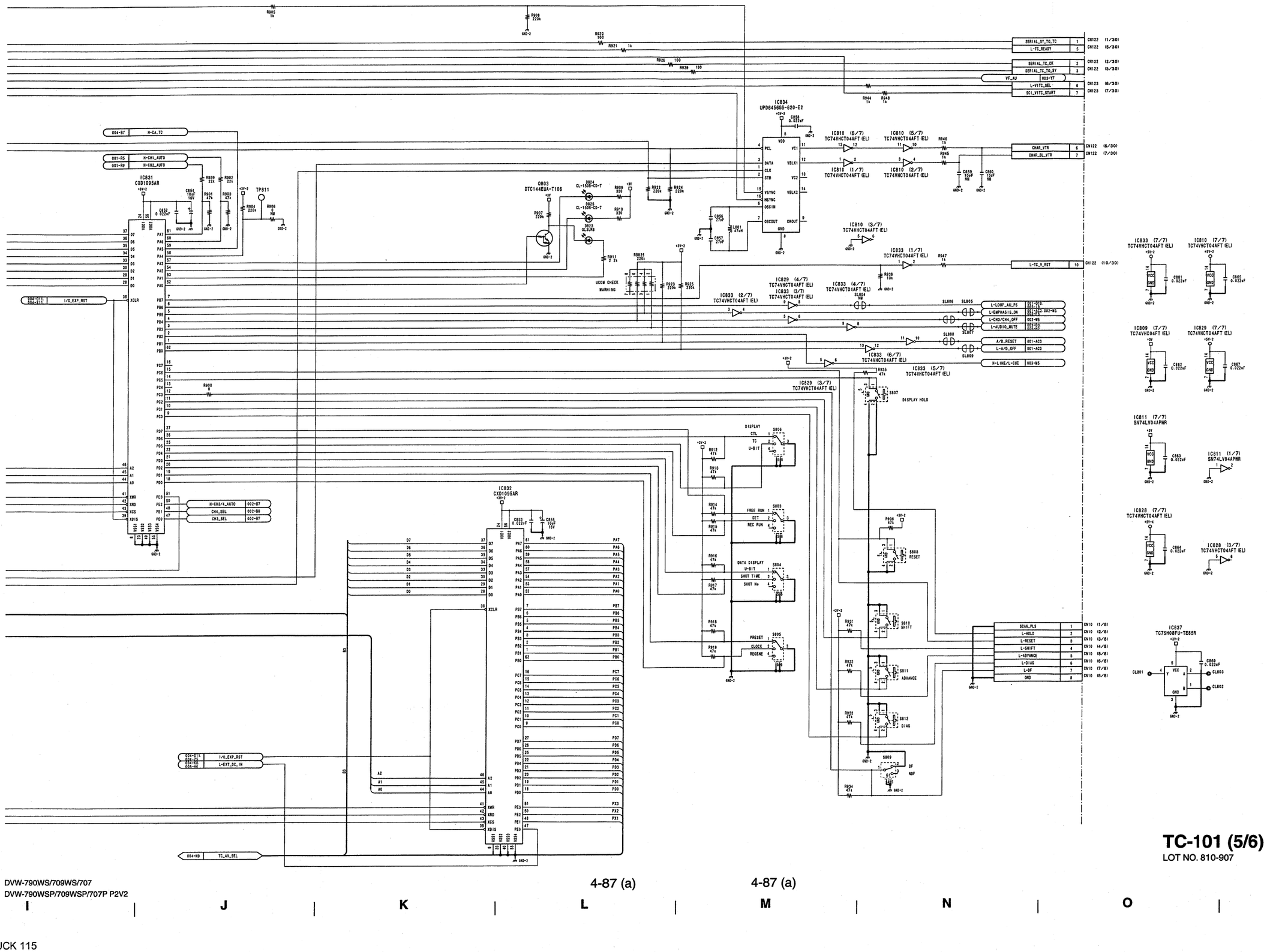

DVW-790WS/709WS/707
DVW-790WSP/709WSP/707P P2V2

4-87 (a)

4-87 (a)

TC-101 (5/6)
LOT NO. 810-907

TC-101 (6/6)

DVW-707 (J) : S/N 30001 through 30010
DVW-707 (SY) : S/N 10001 through 10055
DVW-707P : S/N 40001 through 40120

DVW-709WS (J) : S/N 30001 through 30005
DVW-709WS (SY) : S/N 10001 through 10105
DVW-709WSP : S/N 40001 through 40190

DVW-790WS (J) : S/N 30001 through 30005
DVW-790WS (SY) : S/N 10001 through 10090
DVW-790WSP : S/N 40001 through 40335

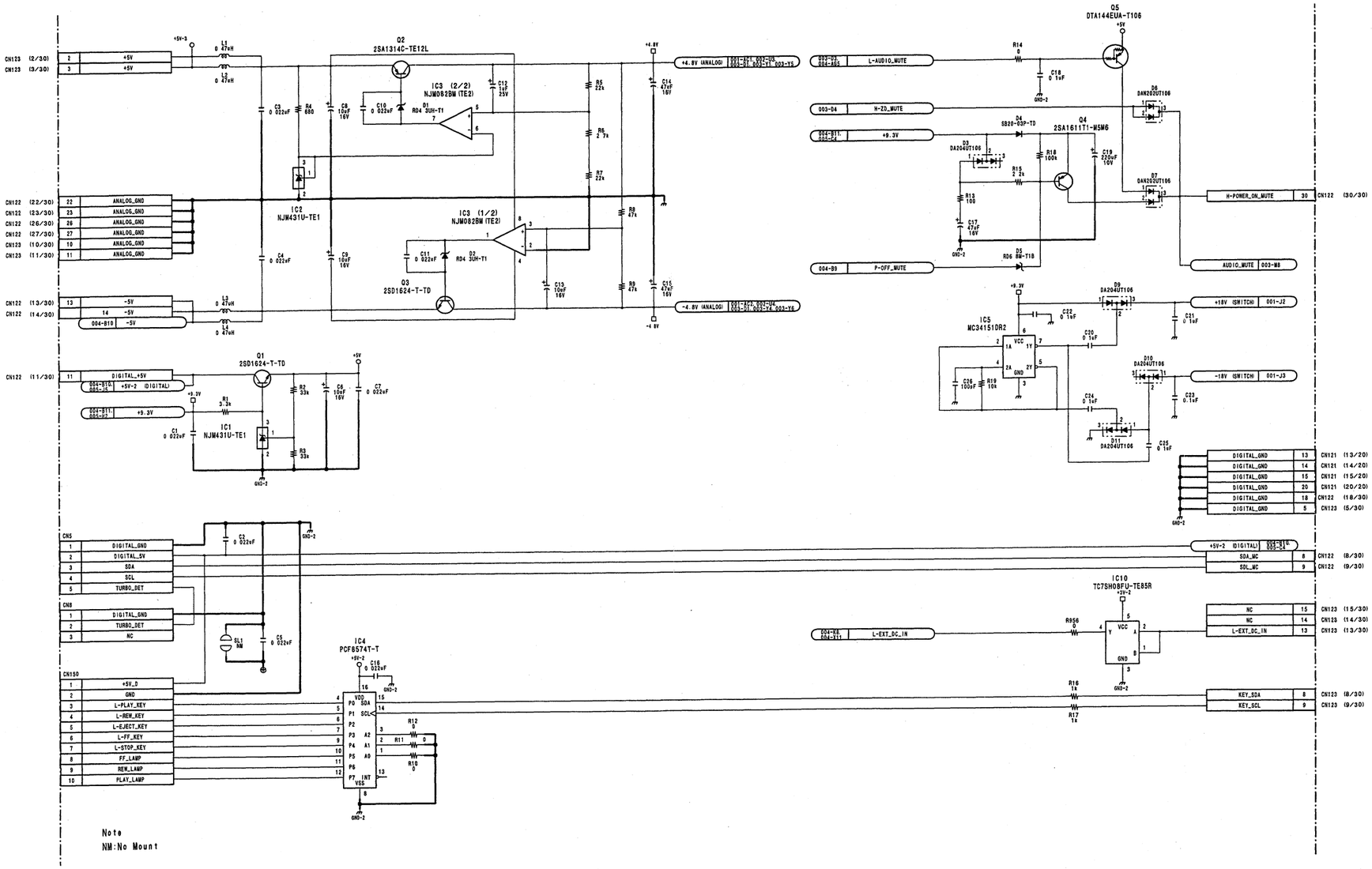

TC-101 (6/6)
LOT NO. 810-907

4-89 (a)

DVW-790WS/709WS/707
DVW-790WSP/709WSP/707P P2V2

-SP1386 / DRUCK 117

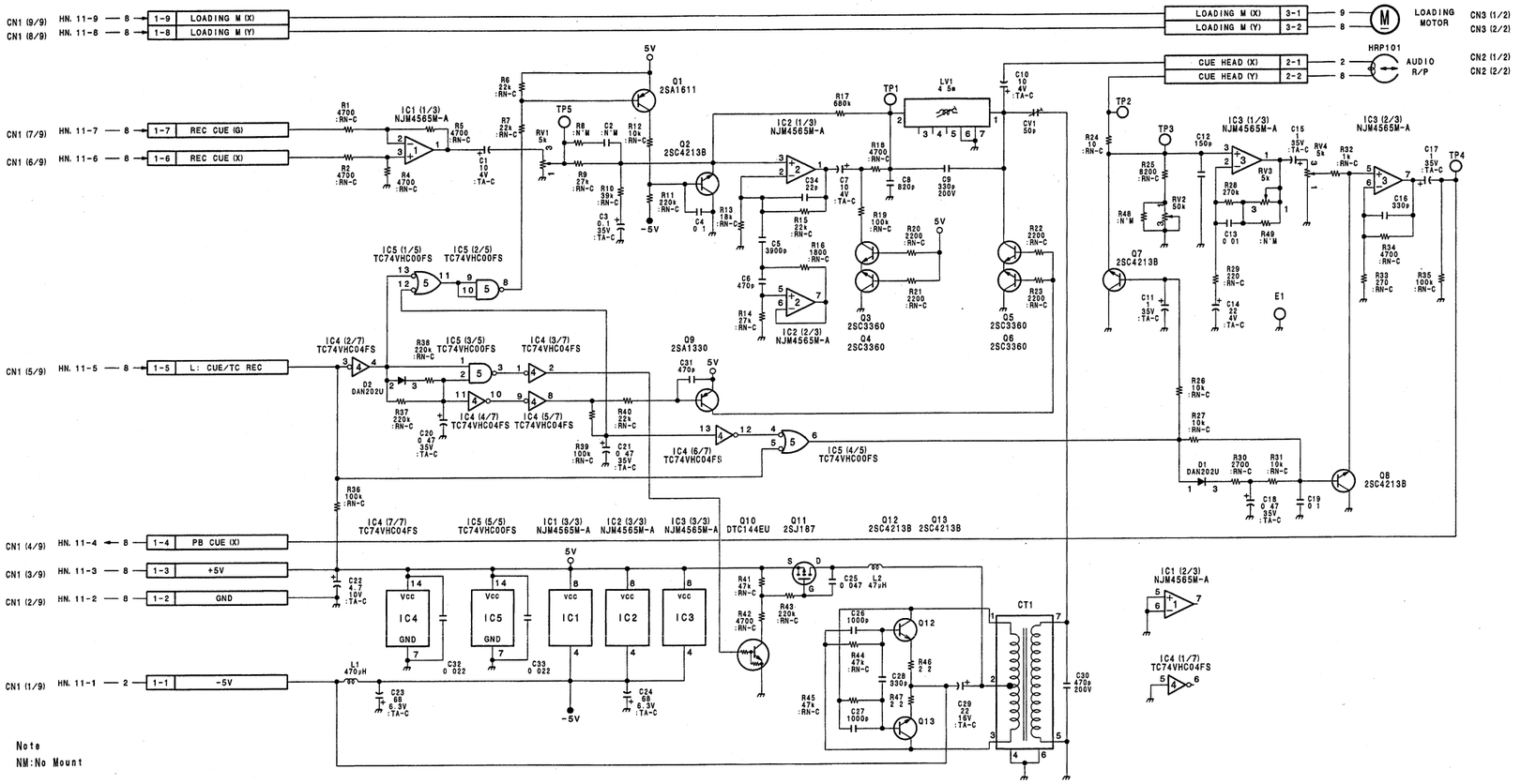

CUE-2
LOT NO. 810-

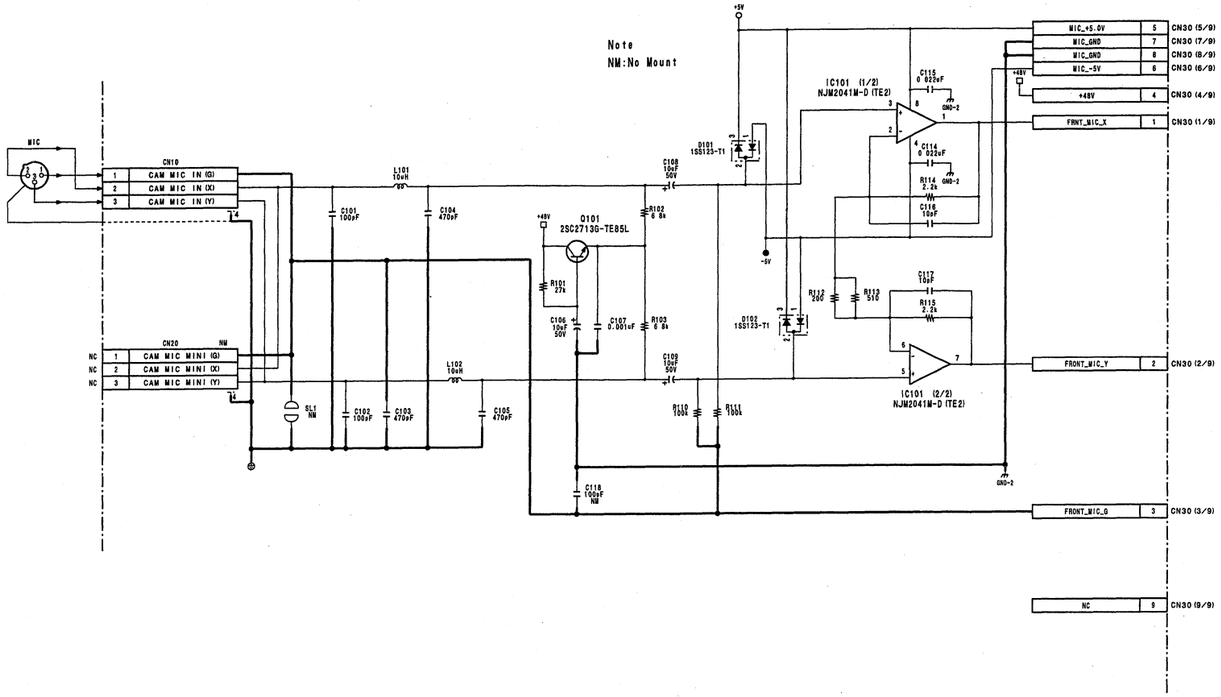

MA-94
LOT NO. 810-

4-92 4-92

DVW-790WS/709WS/707
DVW-790WSP/709WSP/707P P2V2

SONY-SP1386 / DRUCK 120

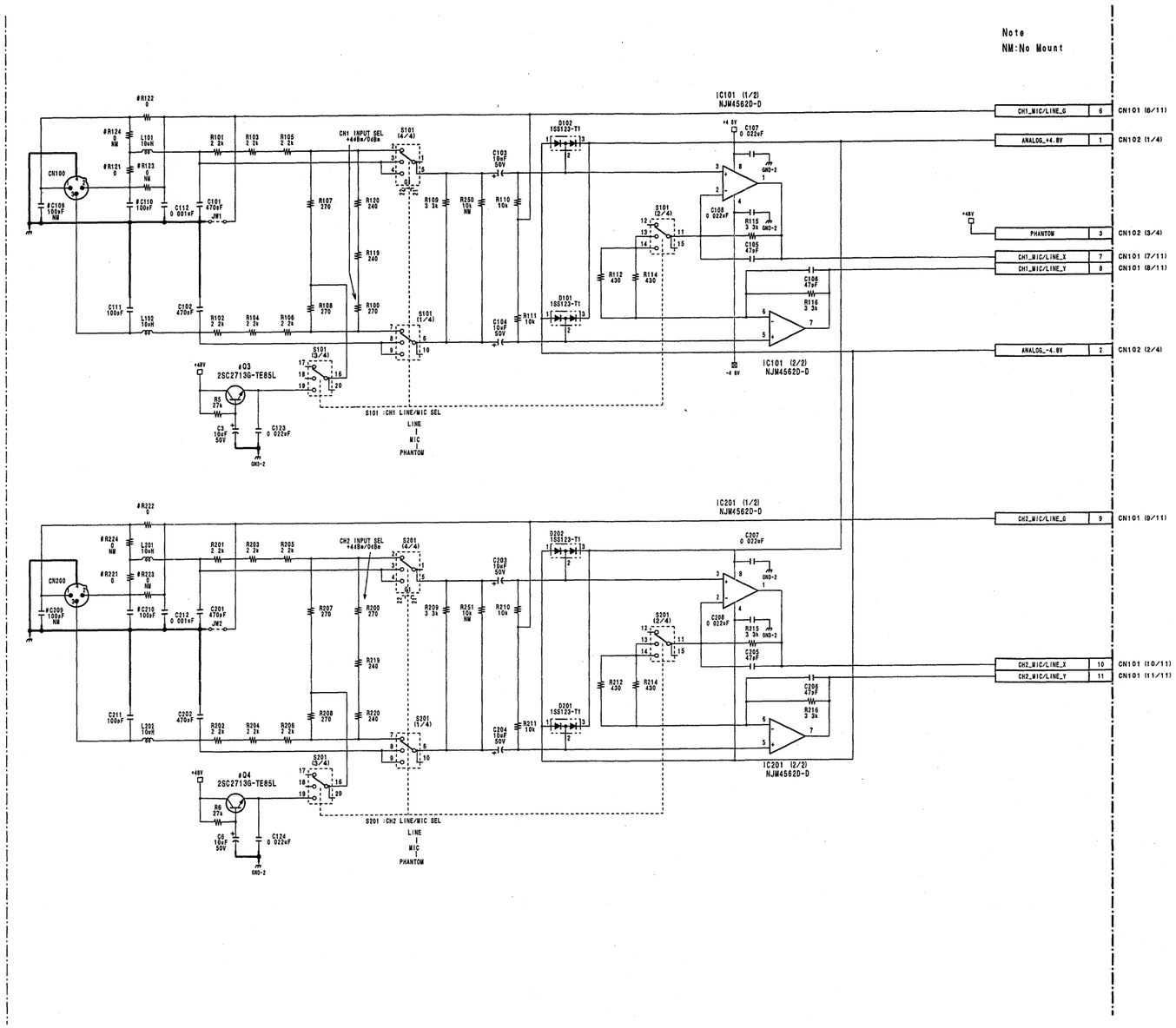

NOTE
#

	AXM-21	AXM-21B
R121	0	:N'M
R122	0	:N'M
R123	:N'M	0
R124	:N'M	0
R221	0	:N'M
R222	0	:N'M
R223	:N'M	0
R224	:N'M	0
C109	:N'M	100P
C110	100P	:N'M
C209	:N'M	100P
C210	100P	:N'M
Q3	2SC2713G	:N'M
Q4	2SC2713G	:N'M

AXM-21
(Except DVW-790WS/709WS/707 (J))
AXM-21B
(For DVW-790WS/709WS/707 (J))
LOT NO. 810-

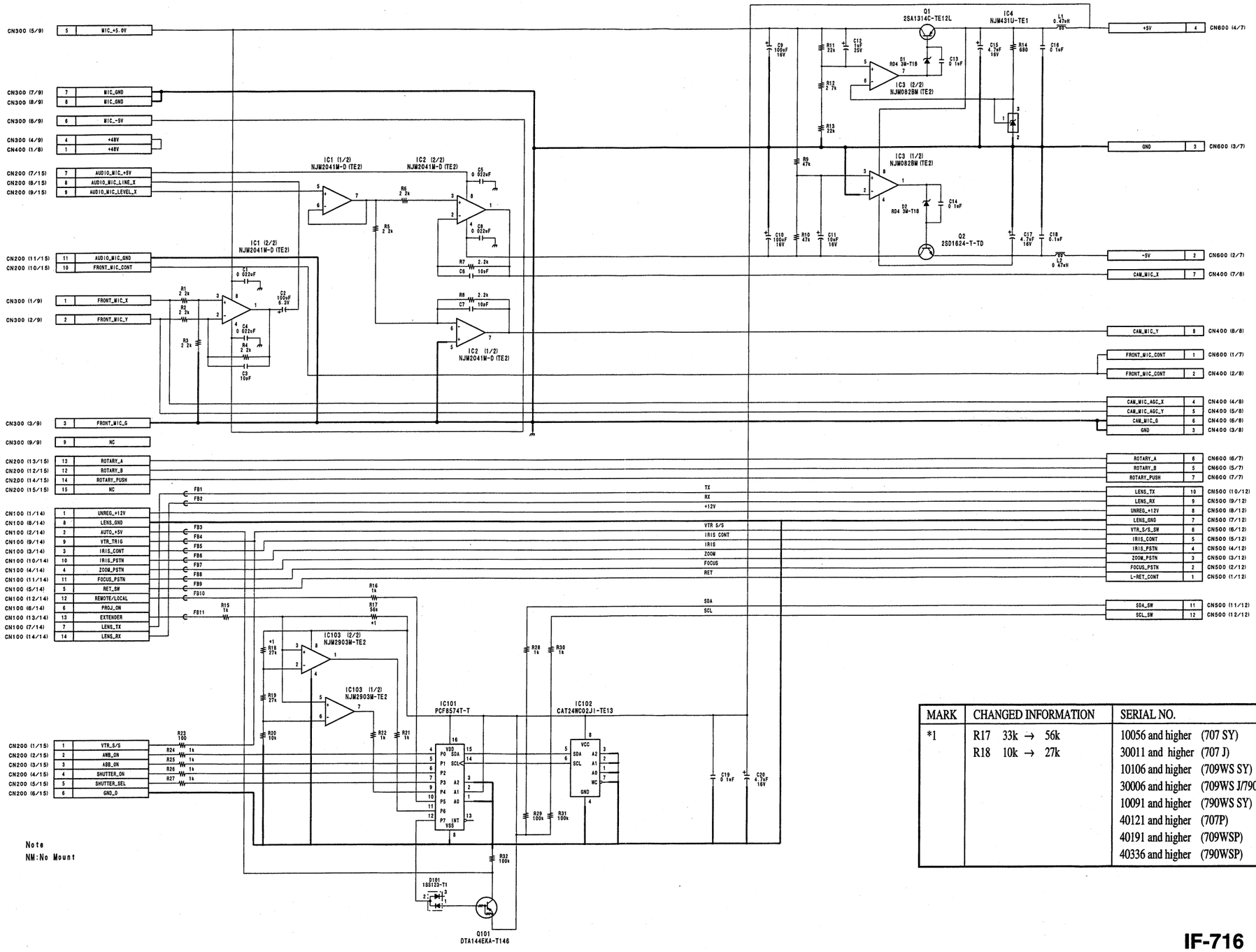

MARK	CHANGED INFORMATION	SERIAL NO.
*1	R17 33k → 56k	10056 and higher (707 SY)
	R18 10k → 27k	30011 and higher (707 J)
		10106 and higher (709WS SY)
		30006 and higher (709WS J/790WS J)
		10091 and higher (790WS SY)
		40121 and higher (707P)
		40191 and higher (709WSP)
		40336 and higher (790WSP)

IF-716
LOT NO. 810-

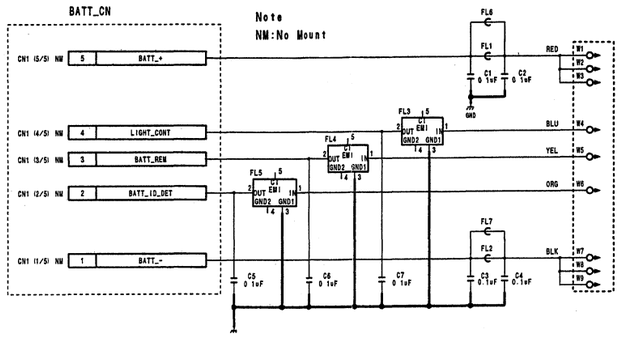

DC-101
LOT NO. 810-

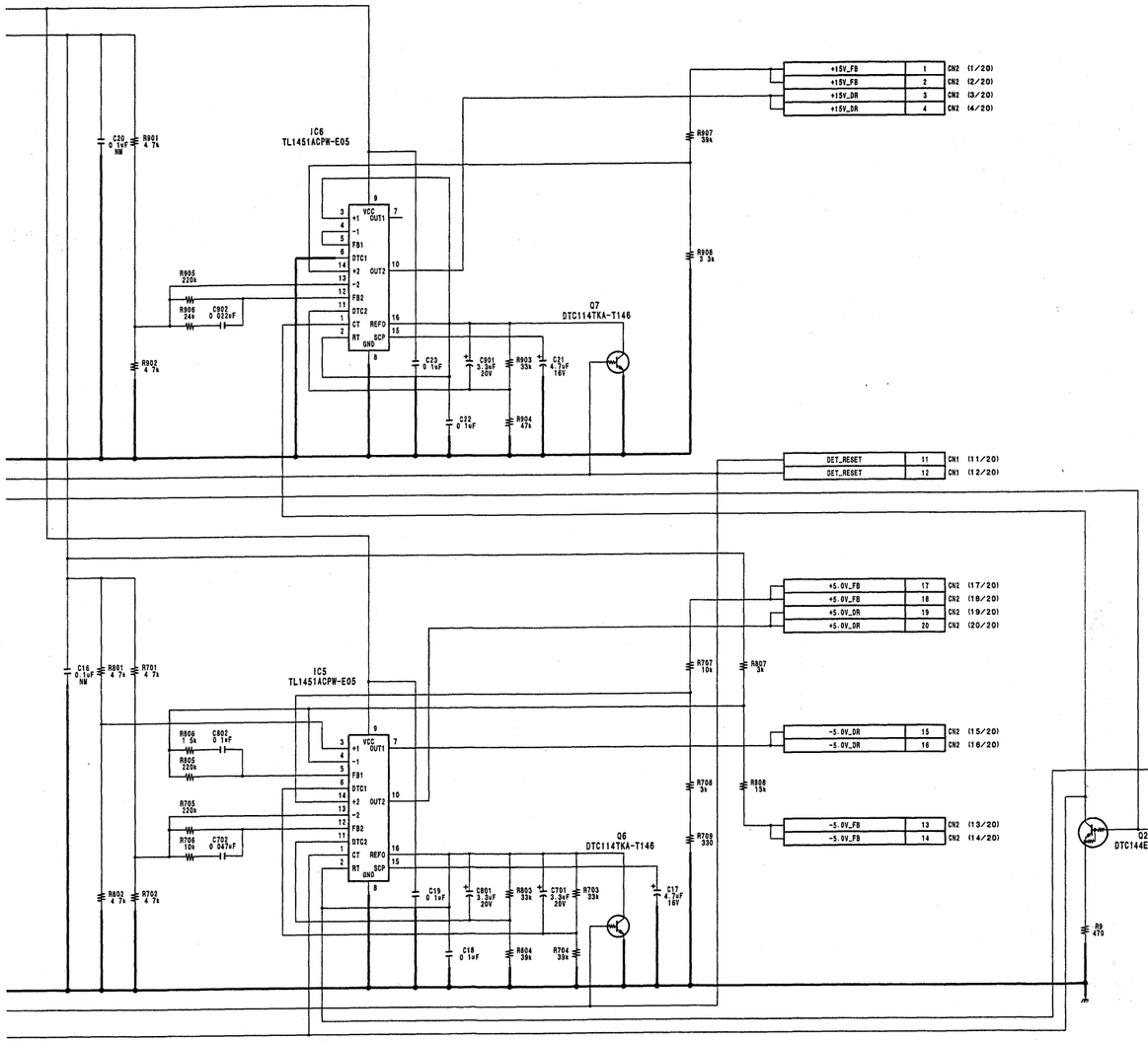

RE-161
LOT NO. 810-

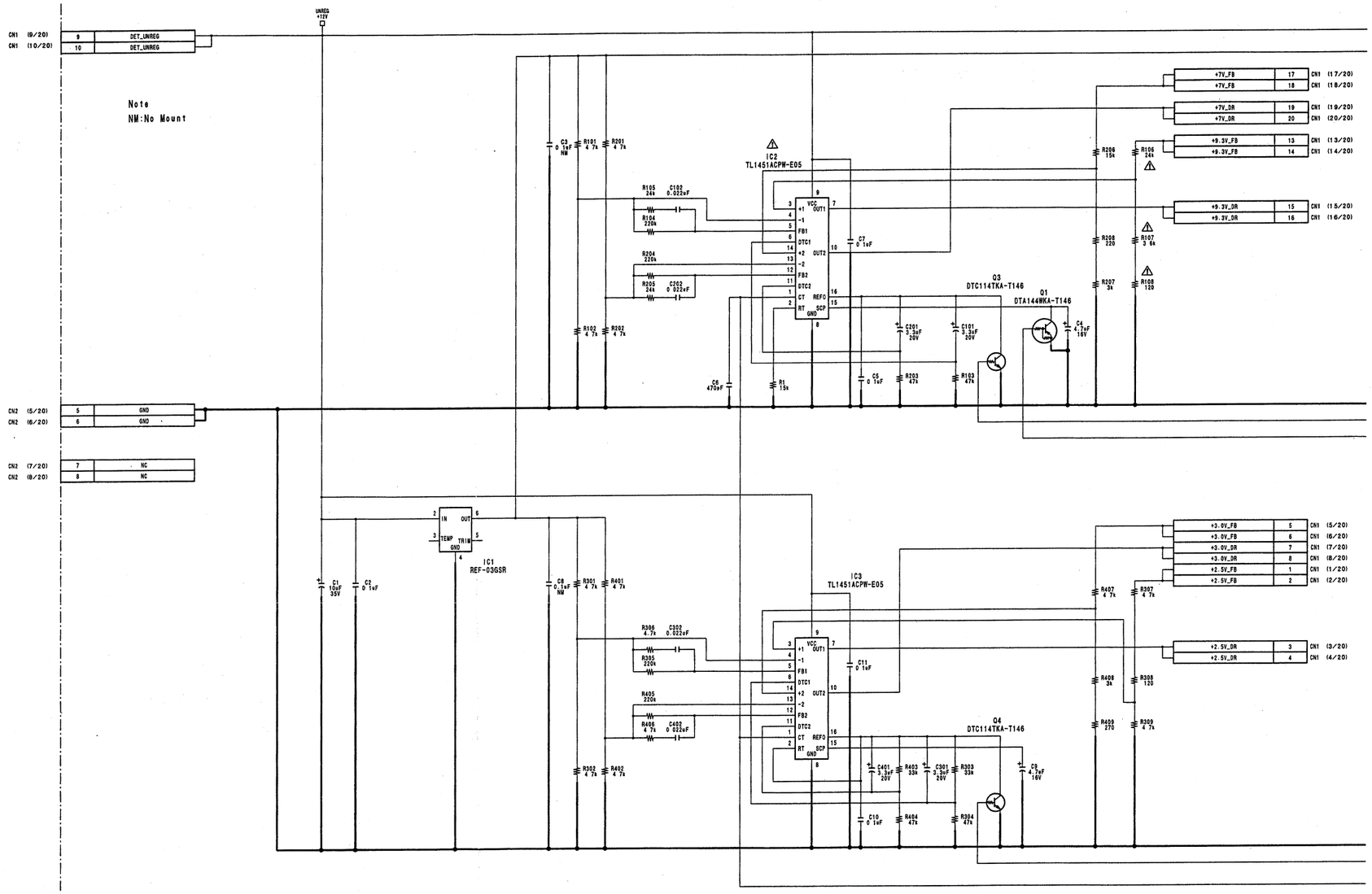
Note
NM:No Mount
UNREG +12V
CN1 (9/20) 9 DET_UNREG
CN1 (10/20) 10 DET_UNREG
CN2 (5/20) 5 GND
CN2 (6/20) 6 GND
CN2 (7/20) 7 NC
CN2 (8/20) 8 NC
IC1 REF-03GSR
IC2 TL1451ACPW-E05
IC3 TL1451ACPW-E05
Q1 DTA144WKA-T146
Q3 DTC114TKA-T146
Q4 DTC114TKA-T146
+7V_FB 17 CN1 (17/20)
+7V_FB 18 CN1 (18/20)
+7V_DR 19 CN1 (19/20)
+7V_DR 20 CN1 (20/20)
+9.3V_FB 13 CN1 (13/20)
+9.3V_FB 14 CN1 (14/20)
+9.3V_DR 15 CN1 (15/20)
+9.3V_DR 16 CN1 (16/20)
+3.0V_FB 5 CN1 (5/20)
+3.0V_FB 6 CN1 (6/20)
+3.0V_DR 7 CN1 (7/20)
+3.0V_DR 8 CN1 (8/20)
+2.5V_FB 1 CN1 (1/20)
+2.5V_FB 2 CN1 (2/20)
+2.5V_DR 3 CN1 (3/20)
+2.5V_DR 4 CN1 (4/20)

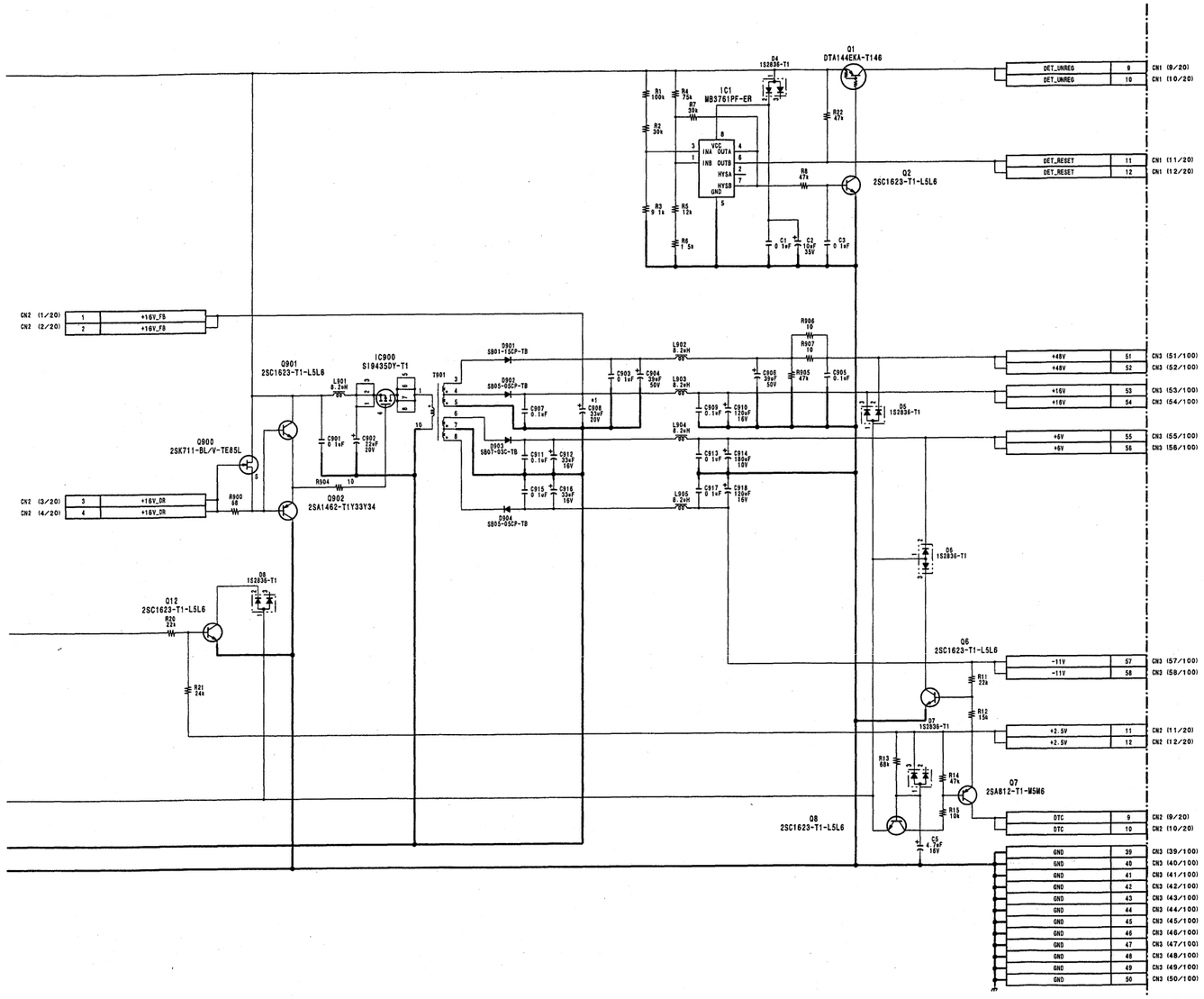

MARK	CHANGED INFORMATION	SERIAL NO.
*1	C908 33uF/16V → 33uF/20V	10056 and higher (707 SY) 30011 and higher (707 J/709WS J/790WS J) 10126 and higher (709WS SY) 10161 and higher (790WS SY) 40191 and higher (707P) 40256 and higher (709WSP) 40511 and higher (790WSP)

RE-160
LOT NO. 810-

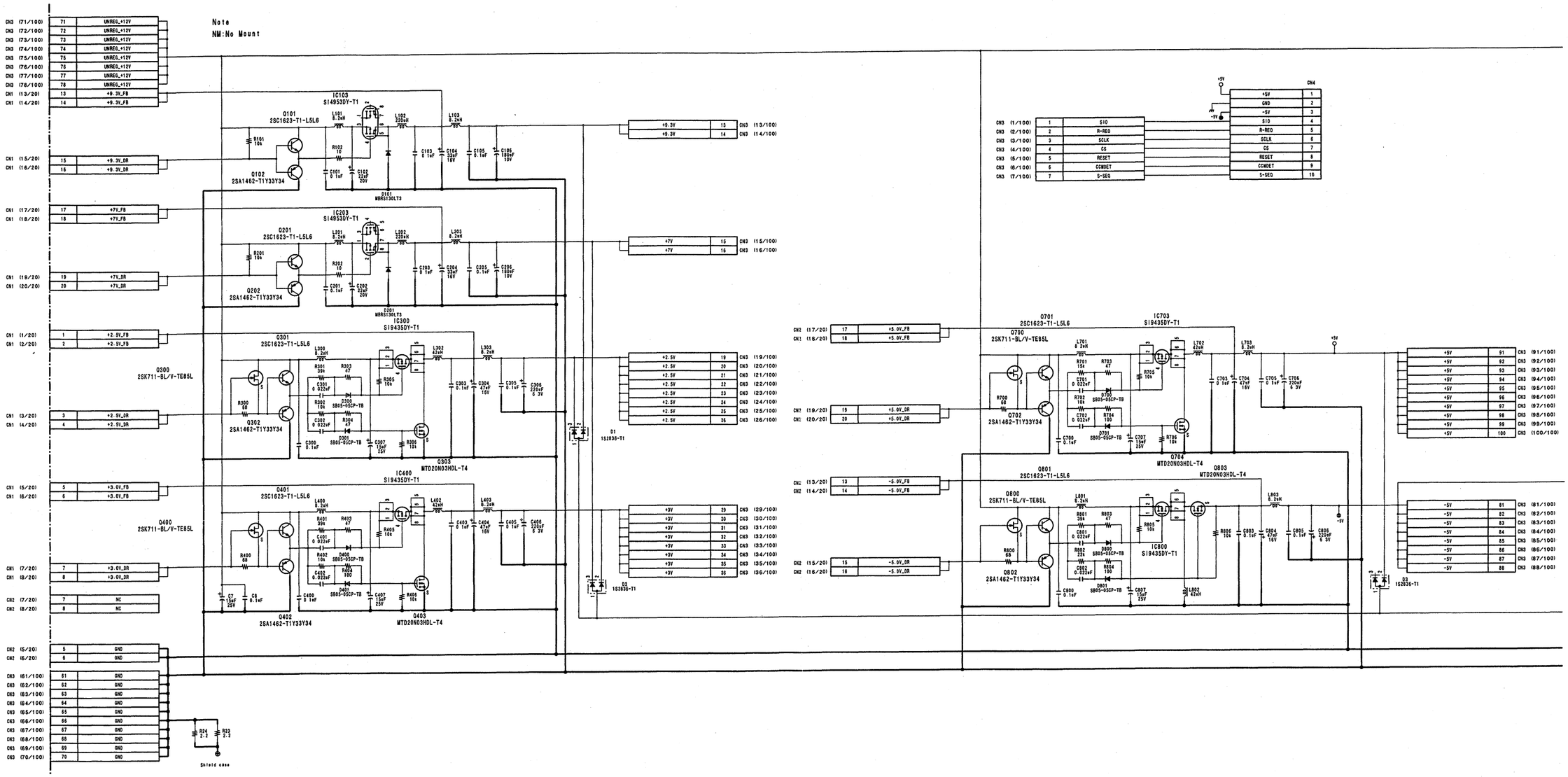
Note
NM:No Mount
IC103
S14953DY-T1
Q101
2SC1623-T1-L5L6
Q102
2SA1462-T1Y33Y34
D101
MBR0130LT3
IC203
S14953DY-T1
Q201
2SC1623-T1-L5L6
Q202
2SA1462-T1Y33Y34
D201
MBR0130LT3
IC300
S19435DY-T1
Q300
2SK711-BL/V-TE85L
Q301
2SC1623-T1-L5L6
Q302
2SA1462-T1Y33Y34
Q303
MTD20N03HDL-T4
IC400
S19435DY-T1
Q400
2SK711-BL/V-TE85L
Q401
2SC1623-T1-L5L6
Q402
2SA1462-T1Y33Y34
Q403
MTD20N03HDL-T4
D1
1S2836-T1
D3
1S2836-T1
Q701
2SC1623-T1-L5L6
Q700
2SK711-BL/V-TE85L
Q702
2SA1462-T1Y33Y34
IC703
S19435DY-T1
Q704
MTD20N03HDL-T4
Q801
2SC1623-T1-L5L6
Q800
2SK711-BL/V-TE85L
Q802
2SA1462-T1Y33Y34
IC800
S19435DY-T1
Q803
MTD20N03HDL-T4
D5
1S2836-T1
Shield case

CNB-11/11B (3/3)

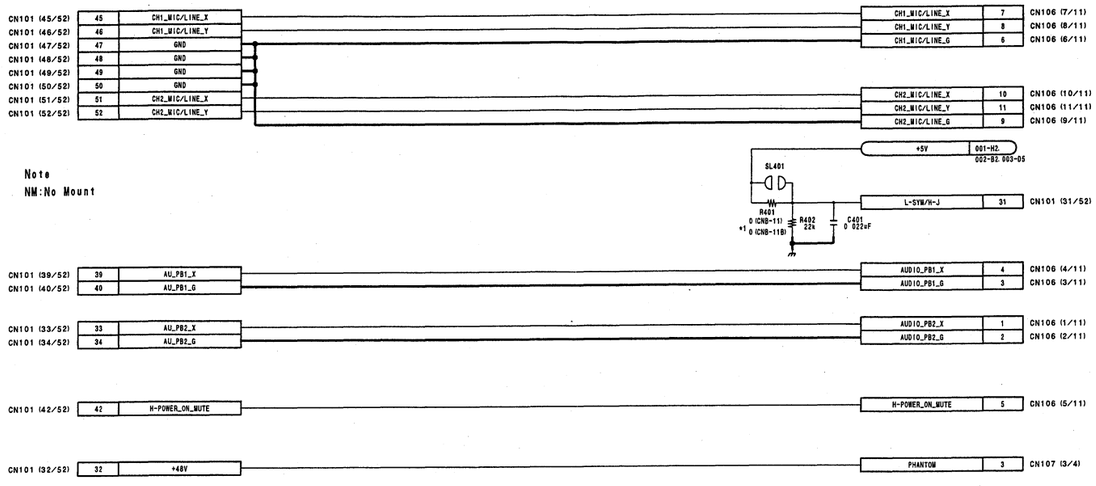

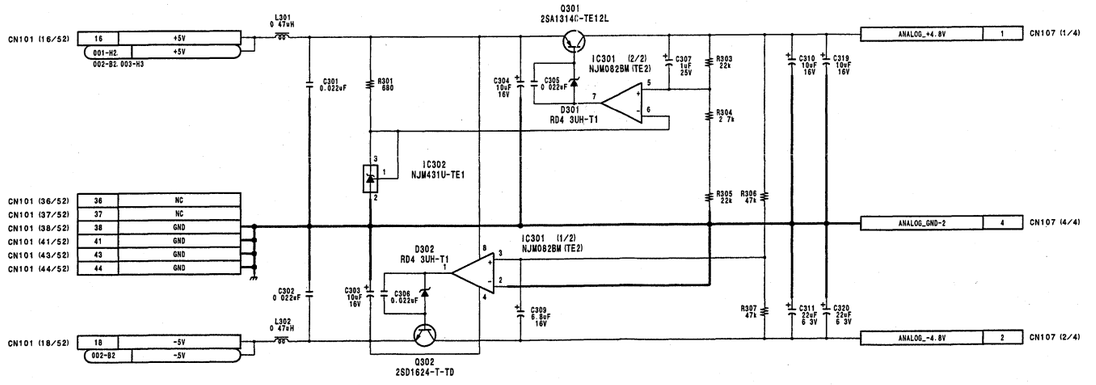

MARK	CHANGED INFORMATION	SERIAL NO.
*1	R401 ADDED	30011 and higher (707 J/790WS J) 30015 and higher (709WS J)

CNB-11 (3/3)
(except DVW-790WS/709WS/707 (J))
CNB-11B (3/3)
(for DVW-790WS/709WS/707 (J))
LOT NO. 810-

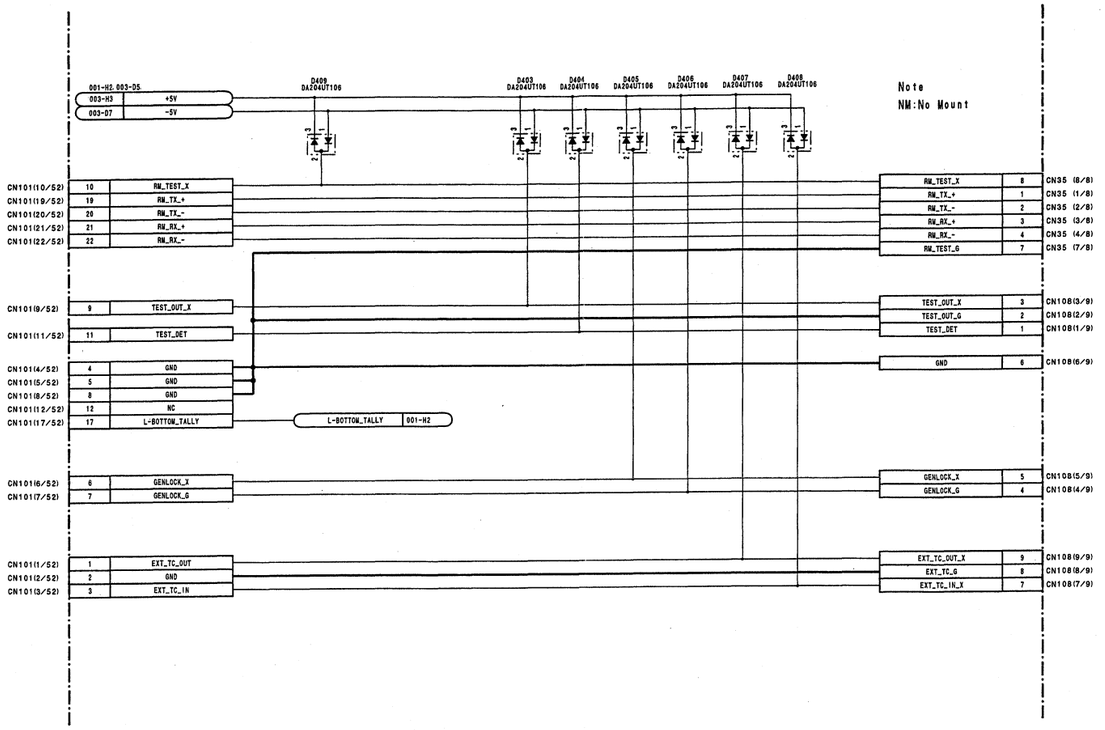

CNB-11 (2/3)

(except DVW-790WS/709WS/707 (J))

CNB-11B (2/3)

(for DVW-790WS/709WS/707 (J))

LOT NO. 810-

CNB-11/11B (1/3)

Note
NM:No Mount

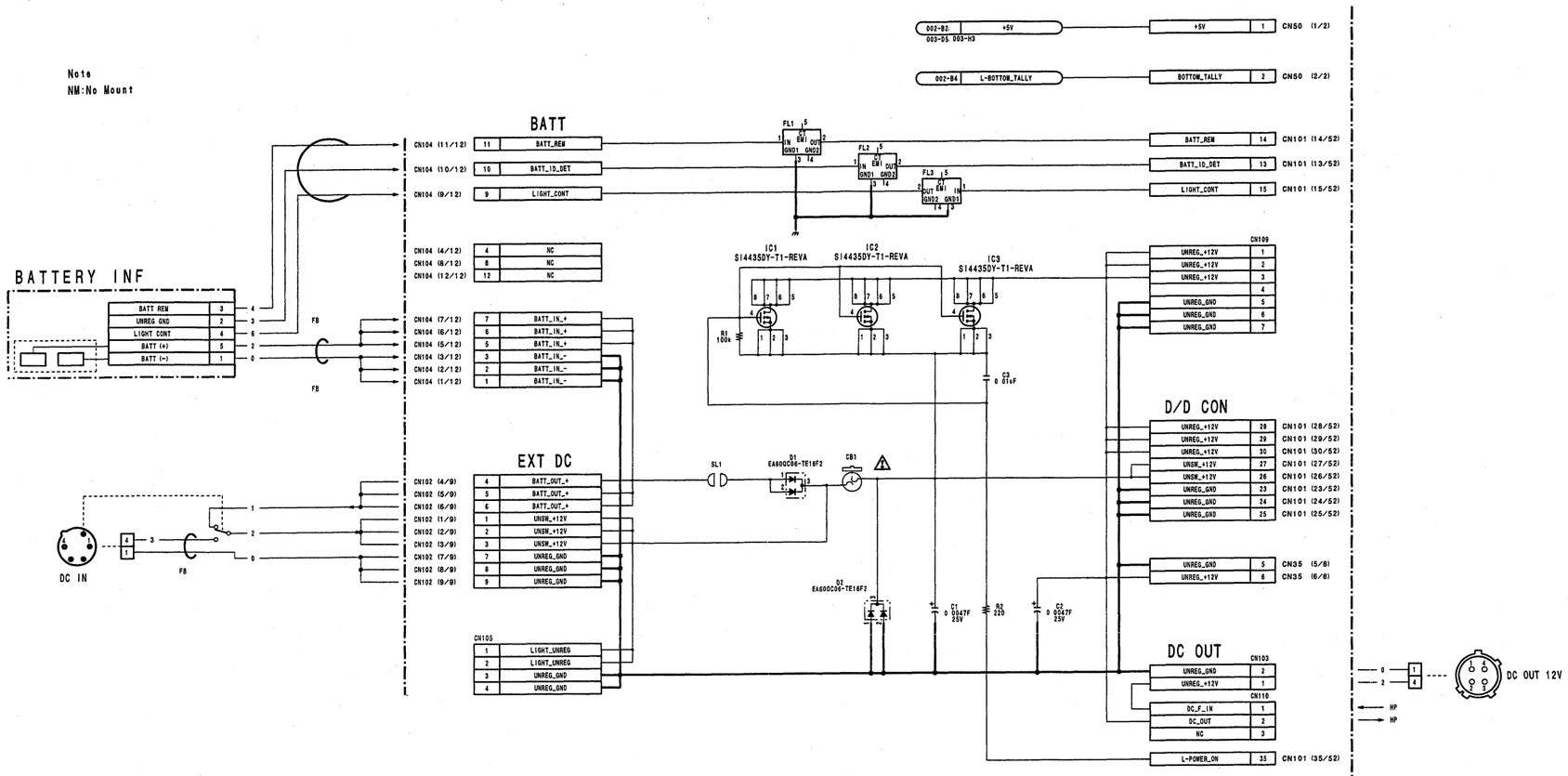

CNB-11 (1/3)
(except DVW-790WS/709WS/707 (J))
CNB-11B (1/3)
(for DVW-790WS/709WS/707 (J))
LOT NO. 810-

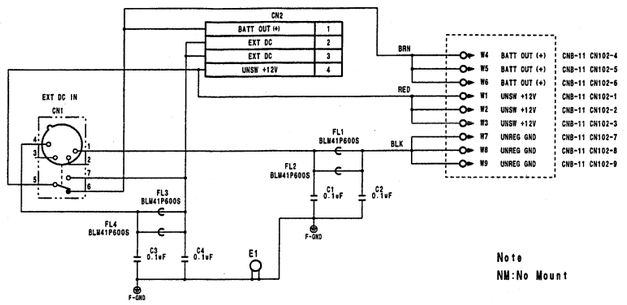

DC-106
LOT NO. 810-

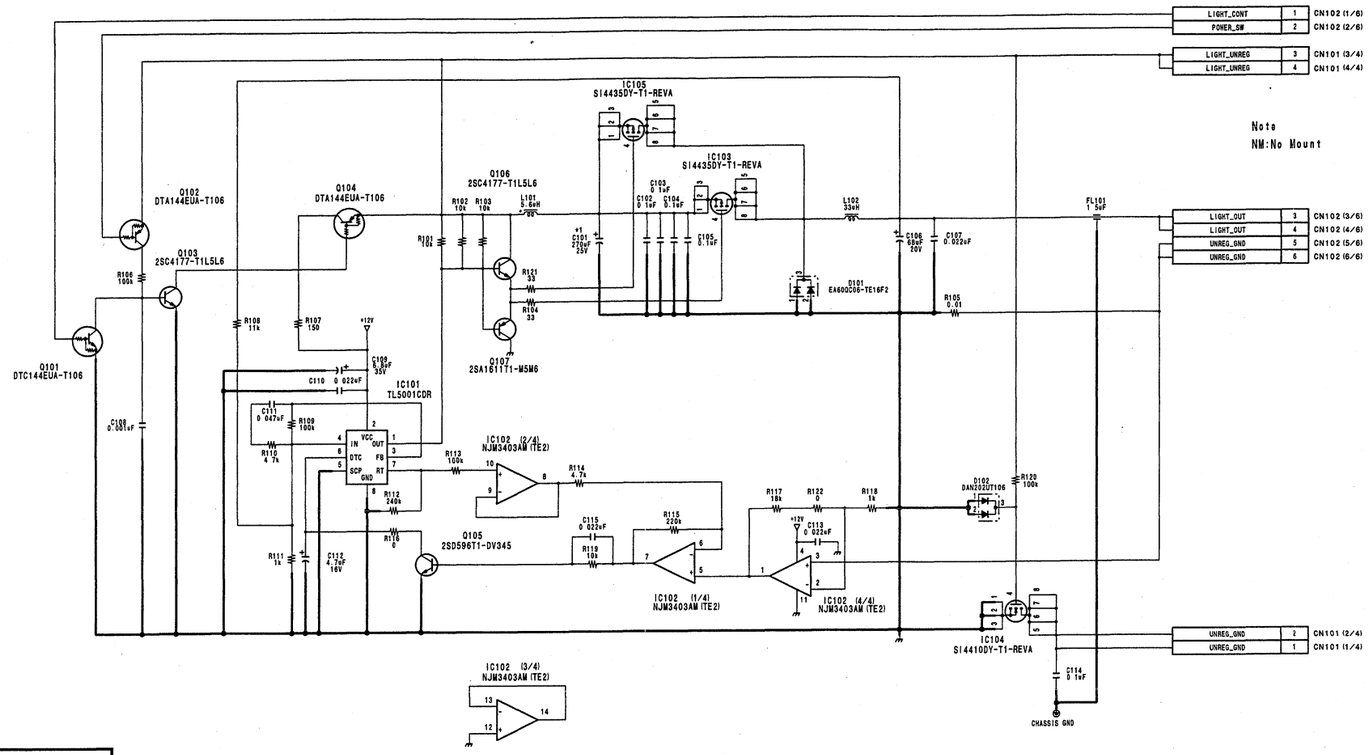

MARK	CHANGED INFORMATION	SERIAL NO.
*1	C101 220uF → 270uF	10056 and higher (707 SY) 30006 and higher (707 J/709WS J/790WS J) 10086 and higher (709WS SY) 10061 and higher (790WS SY) 40106 and higher (707P) 40176 and higher (709WSP) 40216 and higher (790WSP)

PS-533
LOT NO. 810-

Note
NM:No Mount

IF-716

CN60			
CN1-10	1	FRONT_MIC_CONT	CL3
	2	+5V	
	3	GND	CL4
	4	+5V	
CN1-5	5	ROTARY_B	
CN1-4	6	ROTARY_A	
CN1-3	7	ROTARY_PUSH	

IF-716

CN50		
CN1-40/CN5-33	1	SCL_SW
CN1-39/CN5-34	2	SDA_SW
CN1-11	3	LENS_TX
CN1-12	4	LENS_RX
	5	UNREG_+12V
	6	GND (LENS)
CN1-13/CN3-33	7	VTR_S/S_SW
CN1-9	8	IRIS_CONT
CN1-6	9	IRIS_PSTN
CN1-7	10	ZOOM_PSTN
CN1-8	11	FOCUS_PSTN
CN1-14/CN3-34	12	L-RET_CONT

POWER SWITCH

CN10		
CN4-25/CN5-31	1	POWER_SW
	2	GND

Q1
2SC4177-T1L5L6

IC1
TC4S81F (TE85R)

R4 100 W
R2 100k
R1 100k
R6 220 W
R3 100k W
R5 47k
C6 0.001uF
C5 0.1uF
C4 0.1uF
CN4-33 EXT3/OFF
CN101-35 L-POWER_ON

CNB-11

CN101			
CN23-3	1	EXT_TC_OUT_X	
	2	GND	
CN23-1	3	EXT_TC_IN_X	
	4	GND	
	5	GND	
CN2-5	6	GENLOCK_X	
CN2-6	7	GENLOCK_G	
	8	GND	
CN2-9	9	TEST_OUT_X	
CN2-13	10	RM_TEST_X	
CN2-29	11	TEST_DET	
CN1-18, CN23-18	12	L-EXT_DC_IN	
L2	13	BATT_ID_DET	
CN1-15	14	BATT_REM	
L1	15	BATT_LIGHT_CONT	
	16	+5V	
CN1-27	17	BOTTOM_TALLY	
	18	-5V	
CN1-25	19	RM_TX_+	
CN1-26	20	RM_TX_-	
CN1-23	21	RM_RX_+	
CN1-24	22	RM_RX_-	
	23	UNREG_GND	
	24	UNREG_GND	
	25	UNREG_GND	
CN23-11	26	UNSW_+12V	
	27	UNSW_+12V	
	28	UNREG_+12V	
	29	UNREG_+12V	
	30	UNREG_+12V	
CN1-17	31	L-VC/M-J	
	32	+48V	
CN22-11	33	AU_PB2_X	
CN22-10	34	AU_PB2_Y	
IC1	35	L-POWER_ON	
CN6-36	36	H-DTC	
CN6-44	37	H-DET_RESET	
	38	GND	
CN22-15	39	AU_PB1_X	
CN22-14	40	AU_PB1_Y	
	41	GND	
CN22-1	42	H-POWER_ON_MUTE	
	43	GND	
	44	GND	
CN22-6	45	CH1_MIC/LINE_X	
CN22-7	46	CH1_MIC/LINE_Y	
	47	GND	
	48	GND	
	49	GND	
	50	GND	
CN22-2	51	CH2_MIC/LINE_X	
CN22-3	52	CH2_MIC/LINE_Y	

R7 0 W
L2 47nH ±5%
L1 47nH ±5%
L-EXT_DC_IN
BATT_LIGHT
CN1-16
C1 0.1uF
C2 0.1uF
C3 0.1uF
E1
CL1
CL2
CL9
R8 0 W
R9 0 W
H-DTC
H-DET_RESET

TC-101

CN22		
CN3-30	30	SCI_SY_TO_TC
CN3-31	29	SCI_TC_CK
CN3-29	28	SCI_TC_TO_SY
CN3-28	27	L-TC_CS
CN3-27	26	L-TC_READY
CN1-33	25	CHAR_VTR
CN1-34	24	CHAR_BLK_VTR
CN1-35	23	SDA_MC
CN1-36	22	SCL_MC
CN1-37	21	L-TC_VRST
	20	+5V
CN1-30	19	VF_AUDIO
	18	+5V
	17	+5V
L2	16	BATT_ID_DATA
CN101-39	15	AU_PB1_X
CN101-40	14	AU_PB1_Y
	13	GND
	12	GND
CN101-33	11	AU_PB2_X
CN101-34	10	AU_PB2_Y
	9	GND
	8	GND
CN101-46	7	CH1_MIC/LINE_Y
CN101-45	6	CH1_MIC/LINE_X
	5	GND
	4	GND
CN101-52	3	CH2_MIC/LINE_Y
CN101-51	2	CH2_MIC/LINE_X
CN101-42	1	H-POWER_ON_MUTE

TC-101

CN23		
CN4-1/CN5-18	30	L-V_RESET
	29	+5V
	28	+5V
CN4-36	27	LOOP_AU_DATA1/2
	26	GND
CN4-54	25	L-VITC_SEL
CN6-43/CN4-56	24	SCI_VITC_START
CN4-27	23	SDA_TC
CN4-28	22	SCL_TC
	21	GND
	20	GND
CN4-29	19	LTC_TC_TO_DVP
CN101-12, CN1-18	18	L-EXT_DC_IN
	17	
	16	
	15	+9.9V
	14	UNREG_+12V
CN2-88/CN4-84/CN6-15	13	CAM_5Y
CN2-88/CN4-87/CN6-12	12	CAM_CF
CN101-26	11	UNSW_+12V
CN4-43	10	AU_A/D_DATA_3/4
CN4-44	9	AU_A/D_DATA_1/2
CN4-45	8	AUD/ADATA1/2_3/4
CN4-46	7	AU_256_FS
CN4-47	6	AU_64_FS
CN4-48	5	AU_FS
	4	GND (EXT TC OUT G)
CN101-1	3	EXT_TC_OUT_X
CN2-43/CN6-74	2	EXT_TALLY
CN101-3	1	EXT_TC_IN_X

CN1

	1	GND	2	GND	
CN60-7	3	ROTARY_PUSH	4	ROTARY_A	CN60-6
CN60-5	5	ROTARY_B	6	IRIS_PSTN	CN50-9
CN50-10	7	ZOOM_PSTN	8	FOCUS_PSTN	CN50-11
CN50-8	9	IRIS_CONT	10	FRONT_MIC_CONT	CN60-1
CN50-3	11	LENS_TX	12	LENS_RX	CN50-4
CN50-7/CN3-33	13	VTR_S/S_SW	14	L-RET_CONT	CN50-12/CN3-34
CN101-14	15	BATT_REM	16	BATT_LIGHT	L1
CN101-31	17	L-VC/H-J	18	L-EXT_SC_IN	CN101-12. CN23-18
CN3-20	19	SCI_AT_TO_SY	20	SCI_SY_TO_AT	CN3-19
	21	GND	22	GND	
CN101-21	23	RM_RX_+	24	RM_RX_-	CN101-22
CN101-19	25	RM_TX_+	26	RM_TX_-	CN101-20
CN101-17	27	BOTTOM_TALLY	28		
CN101-11	29	TEST_DET	30	VF_AUDIO	CN23-19
	31	GND	32	GND	
CN22-25	33	CHAR_VTR	34	CHAR_BLK_VTR	CN22-24
CN22-23	35	SDA_MC	36	SCL_MC	CN22-22
CN22-21	37	L-TC_VRST	38	SY_READY	CN3-32
CN50-2/CN5-34	39	SDA_SW	40	SCL_SW	CN50-1/CN5-33
CN5-32	41	VFL-NT/N-PAL	42	VF_MIC_VR	CN5-28
CN5-30	43	VF_B-Y	44	VF_R-Y	CN5-29
CN5-28	45	VF_VIDEO_G	46	VF_VIDEO_X	CN5-27
	47	GND	48	GND	
CN5-24	49	VBS_OUT_G	50	VBS_OUT_X	CN5-23

CN3

CN5-80	1	REC_DH_DATA_Y	2	REC_DH_DATA_X	CN5-79
CN5-78	3	REC_CG_DATA_Y	4	REC_CG_DATA_X	CN5-77
CN5-76	5	REC_BF_DATA_Y	6	REC_BF_DATA_X	CN5-75
CN5-74	7	REC_AE_DATA_Y	8	REC_AE_DATA_X	CN5-73
	9	GND	10	GND	
CN5-68	11	H-REC_INHIBIT	12	MPX_ENABLE	CN5-67
	13	RP_-5V	14	L-HUMID_DET	CN5-65
	15	RP_+5V	16	REC_+5V	
	17	GND	18	GND	
CN1-20	19	SCI_SY_TO_AT	20	SCI_AT_TO_SY	CN1-19
CN5-62	21	MPX_CK_Y	22	MPX_CK_Y	CN5-61
CN5-60	23	MPX_X	24	MPX_Y	CN5-59
CN5-57	25	PB_ADJ_REF	26	GND	
CN22-26	27	L-TC_READY	28	L-TC_CS	CN22-27
CN22-28	29	SCI_TC_TO_SY	30	SCI_SY_TO_TC	CN22-30
CN22-29/CN6-42	31	SCI_TC_CK	32	SY_READY	CN1-38
CN50-7/CN1-13	33	VTR_S/S_SW	34	L-RET_CONT	CN50-12/CN1-14
CN5-54	35	PB_DH_RF_G	36	PB_DH_RF_Y	CN5-53
CN5-52	37	PB_DH_RF_X	38	PB_CG_RF_G	CN5-51
CN5-50	39	PB_CG_RF_Y	40	PB_CG_RF_X	CN5-49
CN5-48	41	PB_BF_RF_G	42	PB_BF_RF_Y	CN5-47
CN5-46	43	PB_BF_RF_X	44	PB_AE_RF_G	CN5-45
CN5-44	45	PB_AE_RF_Y	46	PB_AE_RF_X	CN5-43
CN5-38	47	L-SERVO_CS	48	L-SY_READY	CN5-37
CN5-36	49	SCI_SY_TO_SY	50	SCI_SY_TO_SY	CN5-35

MB-811

CN5

CN3-2	REC_DH_DATA_X	79	REC_DH_DATA_Y	80	CN3-1
CN3-4	REC_CG_DATA_X	77	REC_CG_DATA_Y	78	CN3-3
CN3-6	REC_BF_DATA_X	75	REC_BF_DATA_Y	76	CN3-5
CN3-8	REC_AE_DATA_X	73	REC_AE_DATA_Y	74	CN3-7
	GND	71	GND	72	
	GND	69	GND	70	
CN3-12	MPX_ENABLE	67	H-REC_INHIBIT	68	CN3-11
CN3-14	L-HUMID_DET	65	RP_-5V	66	
	REC_+5V	63	RP_+5V	64	
CN3-22	MPX_CK_Y	61	MPX_CK_X	62	CN3-21
CN3-24	MPX_Y	59	MPX_X	60	CN3-23
CN3-25	PG_ADJ_REF	57	VF_MIC_VR	58	
	GND	55	GND	56	
CN3-36	PB_DH_RF_Y	53	PB_DH_RF_G	54	CN3-35
CN3-38	PB_CG_RF_G	51	PB_DH_RF_X	52	CN3-37
CN3-40	PB_CG_RF_X	49	PB_CG_RF_Y	50	CN3-39
CN3-42	PB_BF_RF_Y	47	PB_BF_RF_G	48	CN3-41
CN3-44	PB_AE_RF_G	45	PB_BF_RF_X	46	CN3-43
CN3-46	PB_AE_RF_X	43	PB_AE_RF_Y	44	CN3-45
	GND	41	GND	42	
	GND	39	GND	40	
CN3-48	L-SY_READY	37	L-SERVO_CS	38	CN3-47
CN3-50	SCI_SY_TO_SY	35	SCI_SY_TO_SY	36	CN3-49
CN1-40/CN50-1	SCL_SW	33	SDA_SW	34	CN1-39/CN50-2
CN10-1/CN4-25	POWER_SW	31	VFL-NT/N-PAL	32	CN1-41
CN1-44	VF_R-Y	29	VF_B-Y	30	CN1-43
CN1-46	VF_VIDEO_X	27	VF_VIDEO_G	28	CN1-45
	GND	25	GND	26	
CN1-48	VBS_OUT_X	23	VBS_OUT_G	24	CN1-49
	GND	21	GND	22	
CN2-1	RET_VIDEO_G	19	RET_VIDEO_X	20	CN2-2
CN4-2	SCI_SY_CK	17	L-V_RESET	18	CN4-1/CN23-30
CN4-4	PB_A/E_SEL	15	PB_C/G_SEL	16	CN4-3
CN4-6	PB_B/F_SEL	13	PB_D/H_SEL	14	CN4-5
CN4-8	SAT_AE_EN	11	START_PULSE	12	CN4-7
CN4-10	SAT_CG_EN	9	REC_A/E_SEL	10	CN4-9
CN4-12	EDIT_AUDIO_102	7	SERVO_REC_EN	8	CN4-11
CN4-14	EDIT_AUDIO_100	5	EDIT_AUDIO_101	6	CN4-13
CN4-16	SEQ_2_FIELD	3	EN_START_PULSE	4	CN4-15
CN4-18	SEQ_0	1	SEQ_1	2	CN4-17

DCP-17

CN2

CN5-19	1	RET_VIDEO_G	2	RET_VIDEO_X	
	3	GND	4	GND	
CN4-6	5	GENLOCK_X	6	GENLOCK_G	CN4-5
	7	GND	8	GND	
CN101-9	9	TEST_OUT_X	10	GND	
	11	GND	12	GND	
CN101-10	13	RM_TEST_X	14	GND	
	15		16		
	17		18		
	19		20		
	21		22		
	23		24		
	25		26		
	27		28		
	29		30		
	31		32		
	33		34	SCK_AT_TO_SY	CN4-34
	35	+5V	36	+5V	
CL5	37	+5V	38	+5V	
	39	+9.3V	40	+9.3V	
CL6	41	+7V	42	+7V	
CN6-74/CN23-2	43	EXT_TALLY	44	VTR_EN	CN20-9
	45	H_CONT_G	46	H_CONT_X	CN20-13
	47	GND	48	GND	
	49	V_RESET/CF	50	CA_DATA	
	51	-5V	52	-5V	
	53	-5V	54	-5V	
	55		56	L-SDI_DET	CN4-1
CN4-26	57	SDA_DIF	58	SCL_DIF	CN4-25
	59	LD_DIF	60	LD_DIF2	CN3-35 /CN22-1
CL7	61	+2.5V	62	+2.5V	
	63	+2.5V	64	+2.5V	
	65	GND	66	GND	
	67	GND	68	GND	
CL8	69	+3V	70	+3V	
	71	+3V	72	+3V	
	73	GND	74	GND	
	75	GND	76	GND	
	77	GND	78	GND	
	79	VIDEO_DIR	80	SYNC_DIR	CN53-23
CN53-22/CN3-36	81	CAM_BLKG	82	EXT_EN	CN53-21
CN53-20	83	CAM_SY	84	SKG	R16 /R18
CN4-86 /CN53-18	85	CAM_HD	86	CAM_VD	CN4-85 /CN53-17
CN22-18 /CN4-88 /CN53-16	87	CK_27M	88	CAM_CF	CN4-87
CN4-90 /CN53-11	89	VIDEO_DATA_0	90	VIDEO_DATA_1	CN4-89 /CN53-10
CN4-92 /CN53-9	91	VIDEO_DATA_2	92	VIDEO_DATA_3	CN4-91 /CN53-8
CN4-94 /CN53-7	93	VIDEO_DATA_4	94	VIDEO_DATA_5	CN4-93 /CN53-6
CN4-96 /CN53-5	95	VIDEO_DATA_6	96	VIDEO_DATA_7	CN4-95 /CN53-4
CN4-98 /CN53-3	97	VIDEO_DATA_8	98	VIDEO_DATA_9	CN4-97 /CN53-2
	99	GND	100	GND	

DVP-13

CN4

CN5-18/CN23-30	1	L-V_RESET	2	SCI_SY_CK	CN5-17
CN5-16	3	PB_C/G_SEL	4	PB_A/E_SEL	CN5-15
CN5-14	5	PB_D/H_SEL	6	PB_B/F_SEL	CN5-13
CN5-12	7	START_PULSE	8	SAT_AE_EN	CN5-11
CN5-10	9	REC_A/E_SEL	10	SAT_CG_EN	CN5-9
CN5-8	11	SERVO_REC_EN	12	EDIT_AUDIO_102	CN5-7
CN5-6	13	EDIT_AUDIO_101	14	EDIT_AUDIO_100	CN5-5
CN5-4	15	EN_START_PULSE	16	SEQ_2_FIELD	CN5-3
CN5-2	17	SEQ_1	18	SEQ_0	CN5-1
CN6-80	19	PB_ENV	20	REC_AU_102	CN6-79
CN6-78	21	REC_AU_101	22	REC_AU_100	CN6-77
CN6-76	23	SY_CF	24	SY_VD	CN6-75
CN10-1/CN5-31	25	POWER_SW	26	CAP_SPEED	CN6-73
CN23-23	27	SDA_TC	28	SCL_TC	CN23-22
CN23-19	29	LTC_TC_TO_DVP	30	REC_TC	CN6-67
	31	+7V	32	+7V	
R3	33	EXFD/OFF	34	SCK_AT_TO_SY	CN4-34
	35	+5V	36	LOOP_AU_DATA1/2	CN23-27
	37	+5V	38	+5V	
	39	GND	40	GND	
	41	GND	42	GND	
CN23-10	43	AU_A/3_DATA_3/4	44	AU_A/3_DATA_1/2	CN23-9
CN23-8	45	AUD/4DATA1/2_3/4	46	AU_256_FS	CN23-7
CN23-6	47	AU_64_FS	48	AU_FS	CN23-5
	49	VTR_EN	50	UNREG_+12V	
	51	-5V	52	-5V	
	53	-5V	54	L-VITC_SEL	CN23-25
	55		56	SCI_VITC_START	CN6-43/CN23-24
CN6-42	57	SCI_VITC_CK	58	SCI_VITC	CN6-41
CN6-40	59	VITC_27M	60	VPR_CF_INFO	CN6-39
CN6-38	61	VPR_VD	62	VPR_HD	CN6-37
	63	GND	64	GND	
	65	GND	66	GND	
	67	GND	68	GND	
	69	+3V	70	+3V	
	71	+3V	72	+3V	
	73	+3V	74	+3V	
CN6-28	75	CA_FSO	76	CA_512_FSO	CN6-27
CN6-26	77	CA_64_FSO	78	DIGITAL_AU_3/4_IN	CN6-25
CN6-24	79	DIGITAL_AU_1/2_IN	80	DIGITAL_AU_3/4_OUT	CN6-23
	81	GND	82	DIGITAL_AU_1/2_OUT	CN6-21
	83	GND	84	CAM_SY	CN2-83/CN6-15/CN23-13
CN2-86/CN6-14	85	CAM_VD	86	CAM_HD	CN2-85/CN6-13
CN2-88/CN6-12/CN23-12	87	CAM_CF	88	CK_27M	CN2-87/CN6-11
CN2-89/CN6-9	89	VIDEO_DATA_0	90	VIDEO_DATA_1	CN2-90/CN6-10
CN2-91/CN6-7	91	VIDEO_DATA_2	92	VIDEO_DATA_3	CN2-92/CN6-8
CN2-93/CN6-5	93	VIDEO_DATA_4	94	VIDEO_DATA_5	CN2-94/CN6-6
CN2-95/CN6-3	95	VIDEO_DATA_6	96	VIDEO_DATA_7	CN2-96/CN6-4
CN2-97/CN6-1	97	VIDEO_DATA_8	98	VIDEO_DATA_9	CN2-98/CN6-2
	99	GND	100	GND	

MB-811

CN6

CN4-20	REC_AU_102	79	PB_ENV	80	CN4-19
CN4-22	REC_AU_100	77	REC_AU_101	78	CN4-21
CN4-24	SY_VD	75	SY_CF	76	CN4-23
CN4-26	CAP_SPEED	73	EXT_TALLY	74	CN2-43/CN23-2
	+5V	71	+5V	72	
	+5V	69	+5V	70	
CN4-30	REC_TC	67	VIDEO_DIR	68	CN2-79
	-5V	65	SYNC_DIR	66	CN2-80
	-5V	63	-5V	64	
	+9.3V	61	H_CONT_X	62	CN2-46
	+7V	59	H_CONT_G	60	CN2-45
CN2-50	CA_DATA	57	V_RESET/CF	58	CN2-49
	GND	55	GND	56	
	GND	53	GND	54	
	GND	51	GND	52	
CN101-36	H-DTC	49	L-SDI_DET	50	CN2-56
CN2-57	SDA_DIF	47	SCL_DIF	48	CN2-58
CN2-59	LD_DIF	45	LD_DIF2	46	CN2-60
CN4-56/CN23-24	SCI_VITC_START	43	H-DET_RESET	44	CN101-37
CN4-58	SCI_VITC	41	SCI_VITC_CK	42	CN4-57
CN4-60	VPR_CF_INFO	39	VITC_27M	40	CN4-59
CN4-62	VPR_HD	37	VPR_VD	38	CN4-61
	+2.5V	35	+2.5V	36	
	+2.5V	33	+2.5V	34	
	+3V	31	+3V	32	
	+3V	29	+3V	30	
CN4-76	CA_512_FSO	27	CA_FSO	28	CN4-75
CN4-78	DIGITAL_AU_3/4_IN	25	CA_64_FSO	26	CN4-77
CN4-80	DIGITAL_AU_3/4_OUT	23	DIGITAL_AU_1/2_IN	24	CN4-79
CN4-82	DIGITAL_AU_1/2_OUT	21	EXT_EN	22	CN2-82
	GND	19	GND	20	
CN2-81	CAM_BLKG	17	+48V	18	
CN2-83/CN4-84/CN23-13	CAM_SY	15	SKG	16	CN2-84
CN2-85/CN6-86	CAM_HD	13	CAM_VD	14	CN2-86/CN4-85
CN2-87/CN6-88	CK_27M	11	CAM_CF	12	CN2-89/CN4-87/CN23-12
CN2-89/CN6-89	VIDEO_DATA_0	9	VIDEO_DATA_1	10	CN2-90/CN4-90
CN2-91/CN6-91	VIDEO_DATA_2	7	VIDEO_DATA_3	8	CN2-92/CN4-92
CN2-93/CN6-93	VIDEO_DATA_4	5	VIDEO_DATA_5	6	CN2-94/CN4-94
CN2-95/CN6-95	VIDEO_DATA_6	3	VIDEO_DATA_7	4	CN2-96/CN4-96
CN2-97/CN4-97	VIDEO_DATA_8	1	VIDEO_DATA_9	2	CN2-98/CN4-98

MB-810
LOT NO. 810-

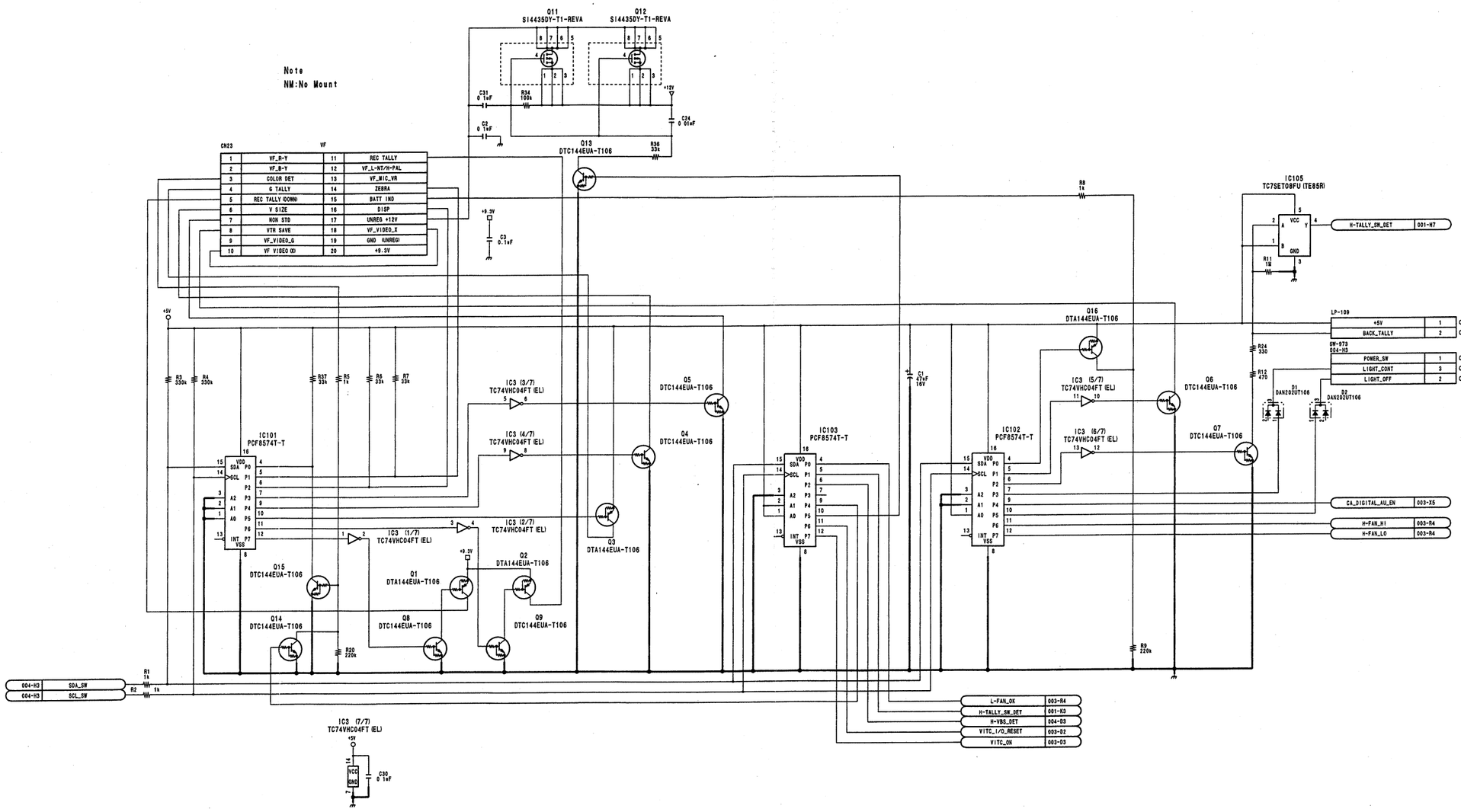

MB-811 (1/4)
LOT NO. 810-

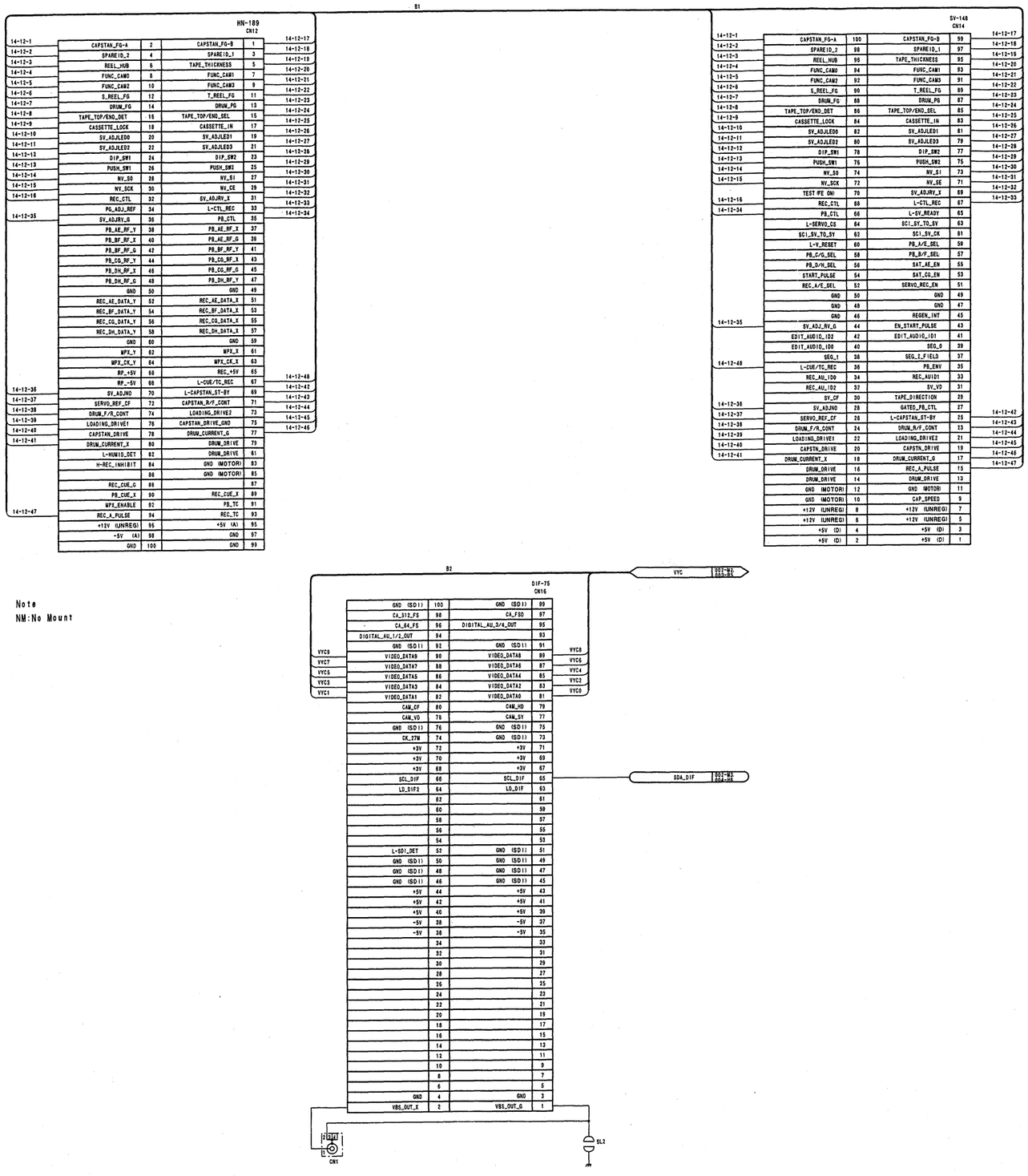

Note
NM:No Mount

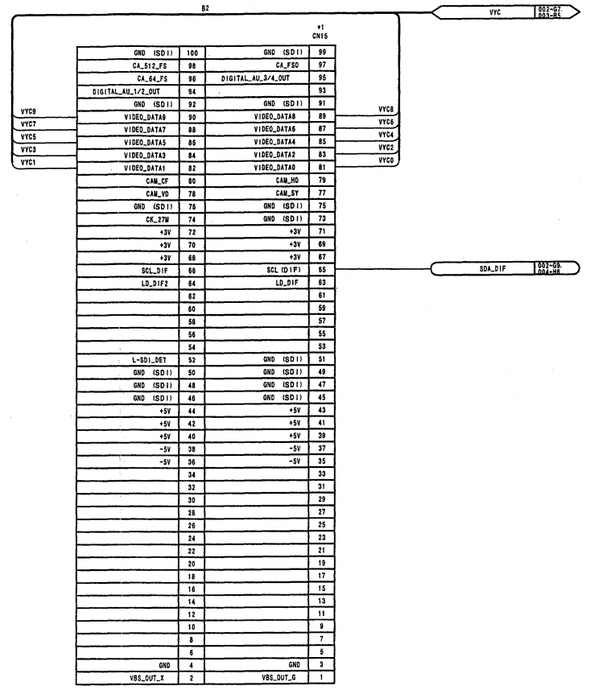

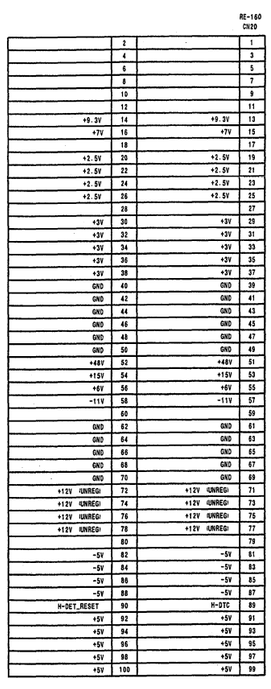

MARK	CHANGED INFORMATION	SERIAL NO.
*1	CN15 DELETED	10011 and higher (707 SY) 30006 and higher (707 J/709WS J/790WS J) 10026 and higher (709WS SY) 10016 and higher (790WS SY) 40021 and higher (707P) 40071 and higher (709WSP) 40061 and higher (790WSP)

MB-811 (2/4)
LOT NO. 810-

MB-811 (3/4)

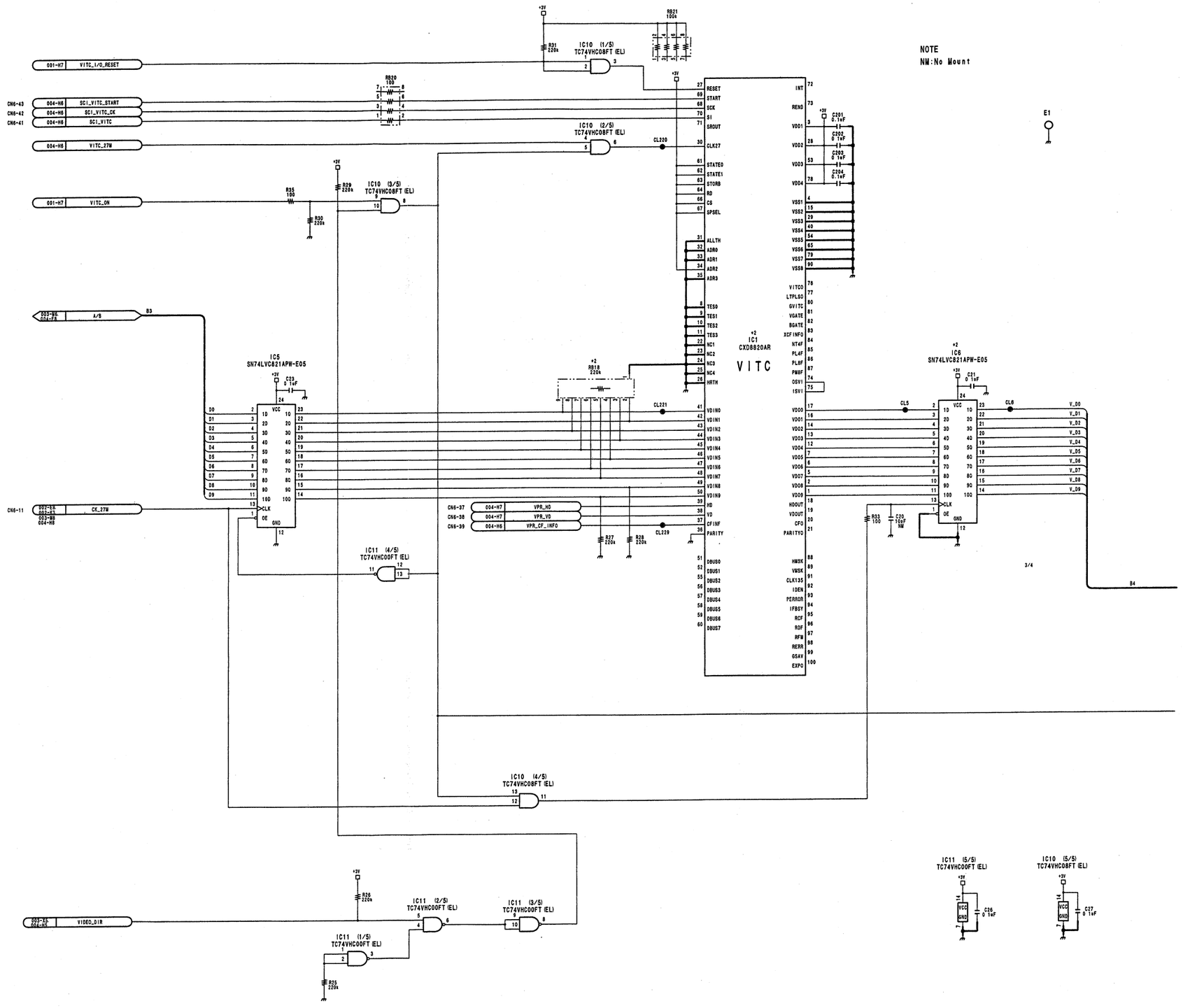

4-110

MB-811 (3/4)

MARK	CHANGED INFORMATION	SERIAL NO.
*1	C50 DELETED	10031 and higher (707 SY) 30006 and higher (707 J/709WS J/790WS J) 10046 and higher (709WS SY) 10036 and higher (790WS SY) 40071 and higher (707P) 40101 and higher (709WSP) 40086 and higher (790WSP)
*2	IC1 DELETED IC6 DELETED RB18 DELETED	10056 and higher (707 SY) 30011 and higher (707 J/709WS J/790WS J) 10126 and higher (709WS SY) 10161 and higher (790WS SY) 40191 and higher (707P) 40256 and higher (709WSP) 40511 and higher (790WSP)

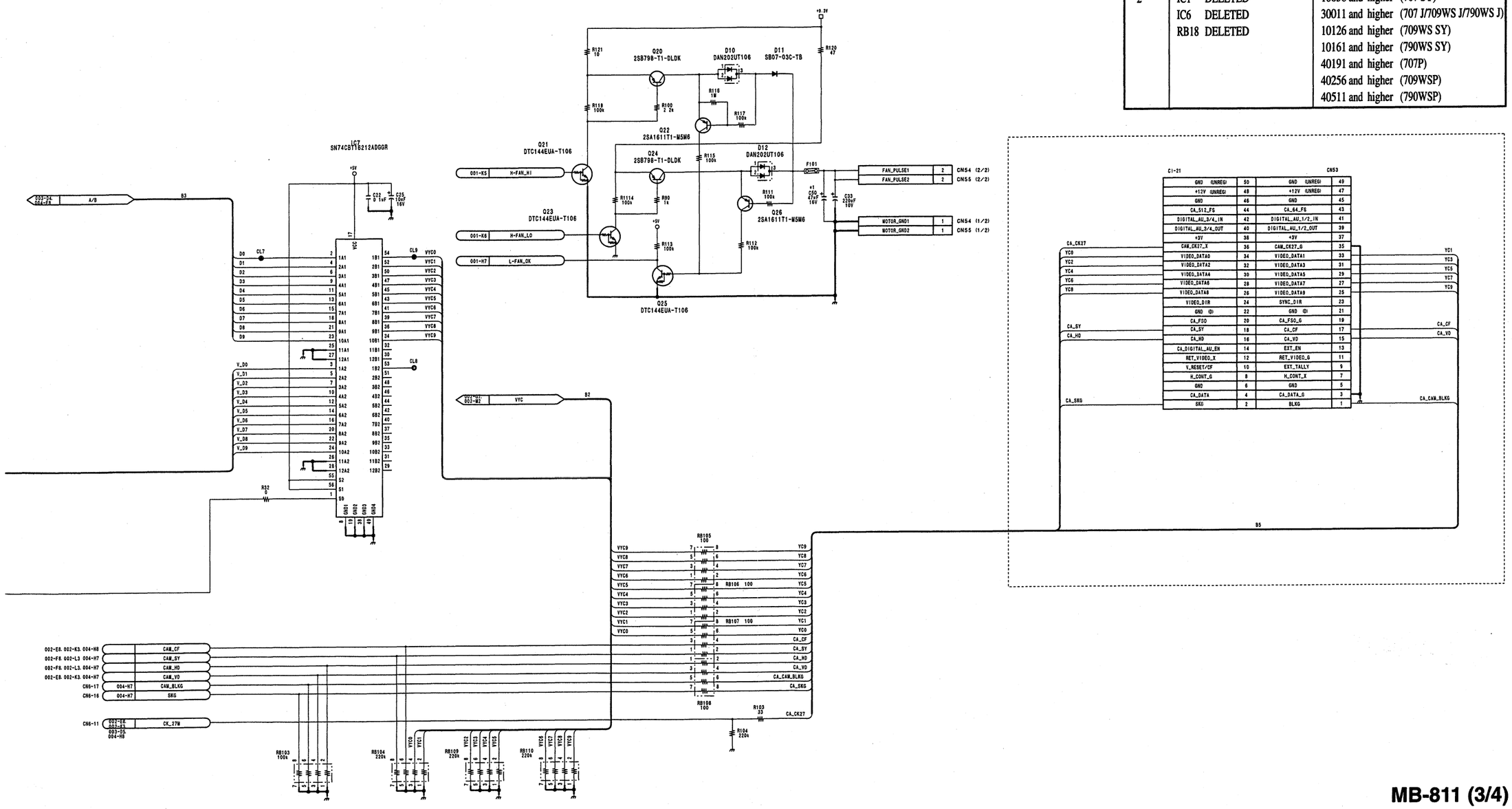

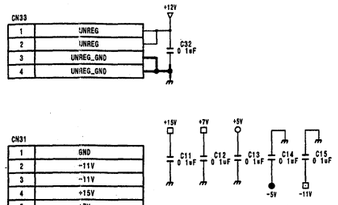

Note
NM:No Mount

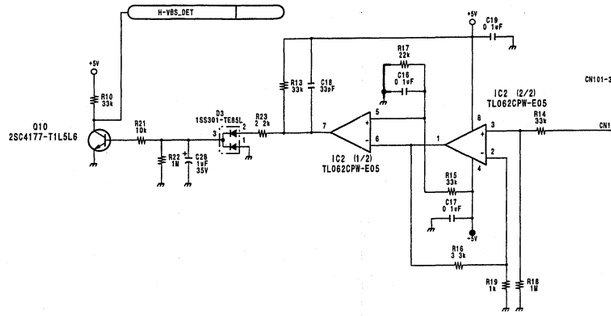

MB 811

	CN5				
CN12-57	79	REC_DH_DATA_X	80	REC_DH_DATA_Y	CN12-58
CN12-55	77	REC_CG_DATA_X	78	REC_CG_DATA_Y	CN12-56
CN12-53	75	REC_BF_DATA_X	76	REC_BF_DATA_Y	CN12-54
CN12-51	73	REC_AE_DATA_X	74	REC_AE_DATA_Y	CN12-52
	71	GND	72	GND	
	69	GND	70	GND	
CN12-92	67	MPX_ENABLE	68	H-REC_INHIBIT	CN12-94
CN12-92	65	L-HUMID_DET	66	RP_-5V	CN12-68
CN12-65	63	REC_+5V	64	RP_+5V	CN12-66
CN12-64	61	MPX_CK_Y	62	MPX_CK_X	CN12-63
CN12-62	59	MPX_Y	60	MPX_X	CN12-61
CN12-34	57	PG_ADJ_REF	58	VF_MIC_VR	CN5-58
	55	GND	56	GND	
CN12-47	53	PB_DH_RF_Y	54	PB_DH_RF_G	CN12-48
CN12-45	51	PB_CG_RF_G	52	PB_DH_RF_X	CN12-46
CN12-43	49	PB_CG_RF_X	50	PB_CG_RF_Y	CN12-44
CN12-41	47	PB_BF_RF_Y	48	PB_BF_RF_G	CN12-42
CN12-39	45	PB_AE_RF_G	46	PB_BF_RF_X	CN12-40
CN12-37	43	PB_AE_RF_X	44	PB_AE_RF_Y	CN12-38
	41	GND	42	GND	
	39	GND	40	GND	
CN14-65	37	L-SY_READY	38	L-SERVO_CS	CN14-64
CN14-63	35	SCI_SY_TO_SY	36	SCI_SY_TO_SY	CN14-62
	33	SCL_SW	34	SDA_SW	
	31	POWER_SW	32	VF_L-NT/H-PAL	CN23-12
CN101-3S/CN10-1 CN23-1	29	VF_R-Y	30	VF_B-Y	CN23-2
CN23-10	27	VF_VIDEO_X	28	VF_VIDEO_G	CN23-9
	25	GND	26	GND	
CN1-1/CN16-2	23	VBS_OUT_X	24	VBS_OUT_G	CN1-2/CN16-1
	21	GND	22	GND	
CN53-11	19	RET_VIDEO_G	20	RET_VIDEO_X	CN53-12
CN14-61	17	SCI_SY_CK	18	L-V_RESET	CN14-60
CN14-59	15	PB_A/E_SEL	16	PB_C/G_SEL	CN14-58
CN14-57	13	PB_B/F_SEL	14	PB_D/H_SEL	CN14-56
CN14-55	11	SAT_AE_EN	12	START_PULSE	CN14-54
CN14-53	9	SAT_CG_EN	10	REC_A/E_SEL	CN14-52
CN14-42	7	EDIT_AUDIO_1D2	8	SERVO_REC_EN	CN14-51
CN14-40	5	EDIT_AUDIO_1D0	6	EDIT_AUDIO_1D1	CN14-41
CN14-37	3	SEQ_2_FIELD	4	EN_START_PULSE	CN14-43
CN14-39	1	SEQ_0	2	SEQ_1	CN14-38

MB 811

	CN6				
CN14-32	79	REC_AU_1D2	80	PB_ENV	CN14-35
CN14-34	77	REC_AU_1D0	78	REC_AU1D1	CN14-33
CN14-31	75	SV_VD	76	SV_CF	CN14-30
CN14-9	73	CAP_SPEED	74	EXT_TALLY	CN53-9
	71	+5V	72	+5V	
	69	+5V	70	+5V	
CN12-93	67	REC_TC	68	VIDEO_DIR	
	65	-5V	66	SYNC_DIR	
	63	-5V	64	-5V	
	61	+9.3V	62	H_CONT_X	CN53-7
	59	+7V	60	H_CONT_G	CN53-8
CN53-4	57	CA_DATA	58	V_RESET/CF	CN53-10
	55	GND	56	GND	
	53	GND	54	GND	
	51	GND	52	GND	
CN20-89	49	H-DTC	50	L-SDI_DET	
CN15-65/CN16-65	47	SDA_DIF	48	SCL_DIF	CN16-52
CN15-63/CN16-63	45	LD_DIF	46	LD_DIF2	CN15-66/CN16-66
IC-69	43	SCI_VITC_START	44	H-DET_RESET	CN20-90
IC-70	41	SCI_VITC	42	SCI_VITC_CK	IC-68
IC-37	39	VPR_CF_INFO	40	VITC_27M	IC-30
IC-39	37	VPR_HD	38	VPR_VD	IC-38
	35	+2.5V	36	+2.5V	
	33	+2.5V	34	+2.5V	
	31	+3V	32	+3V	
	29	+3V	30	+3V	
CN16-98	27	CA_512_FS	28	CA_FSO	
	25	DIGITAL_AU_3/4_IN	26	CA_64_FS	CN16-97
	23	DIGITAL_AU_3/4_OUT	24	DIGITAL_AU_1/2_IN	CN16-9
	21	DIGITAL_AU_1/2_OUT	22	EXT_EN	
	19	GND	20	GND	
CN16-77	17	CAM_BLKG	18	+48V	CN16-78
CN16-79	15	CAM_SY	16	SKG	CN16-80
CN16-74	13	CAM_HD	14	CAM_VD	
	11	CK_27M	12	CAM_CF	
	9	VIDEO_DATA_0	10	VIDEO_DATA_1	
	7	VIDEO_DATA_2	8	VIDEO_DATA_3	
	5	VIDEO_DATA_4	6	VIDEO_DATA_5	
	3	VIDEO_DATA_6	4	VIDEO_DATA_7	
	1	VIDEO_DATA_8	2	VIDEO_DATA_9	

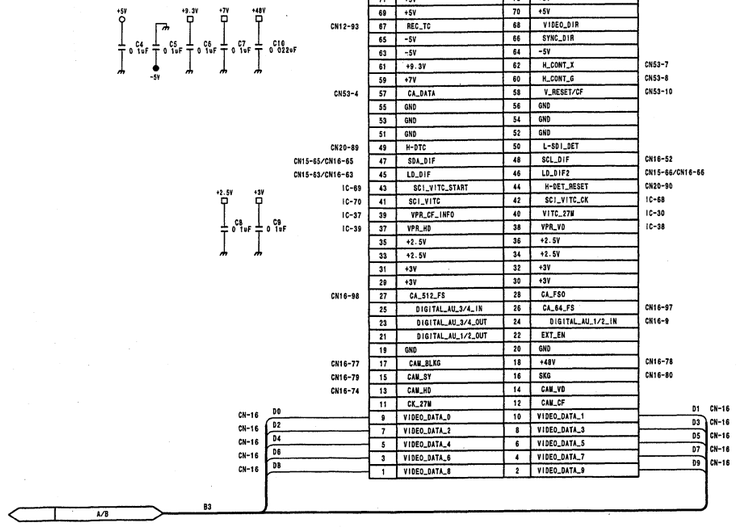

MB-811 (4/4)
LOT NO. 810-

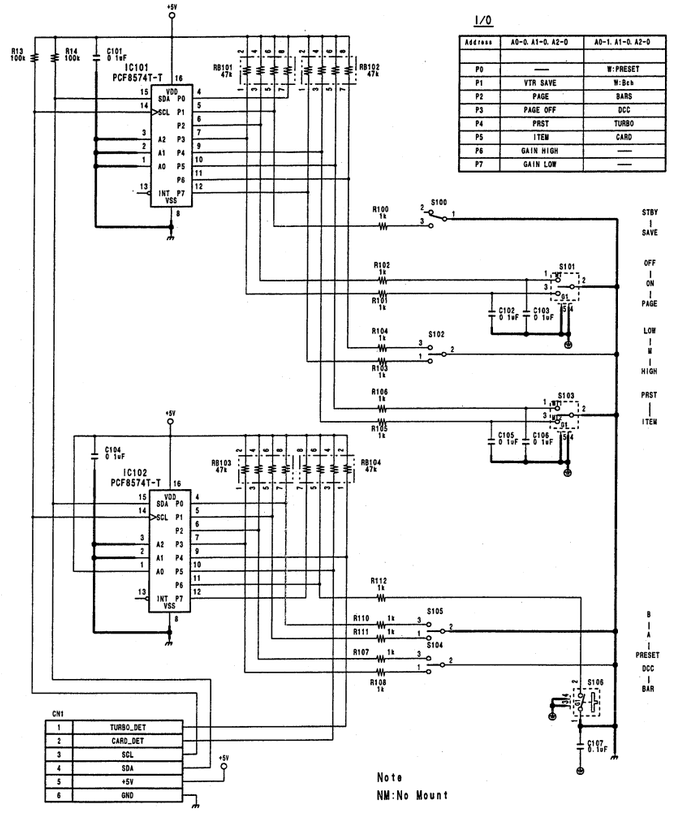

CP-329
LOT NO. 810-

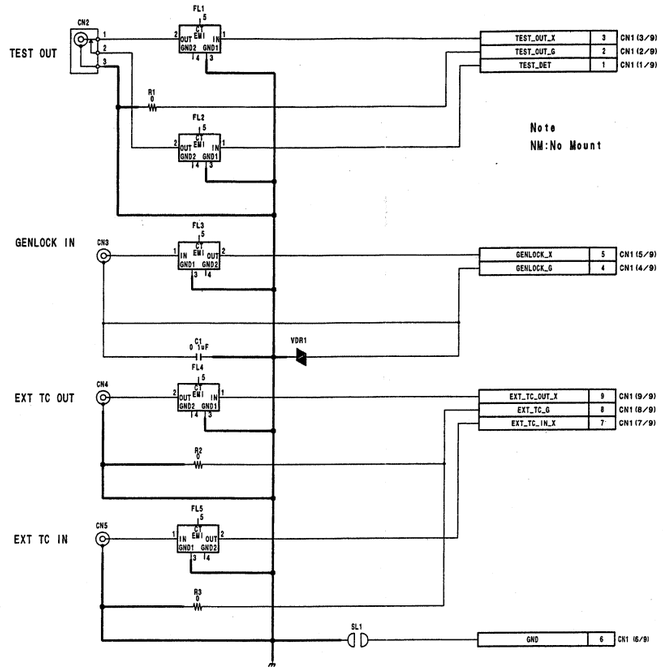

IO-178
LOT NO. 810-

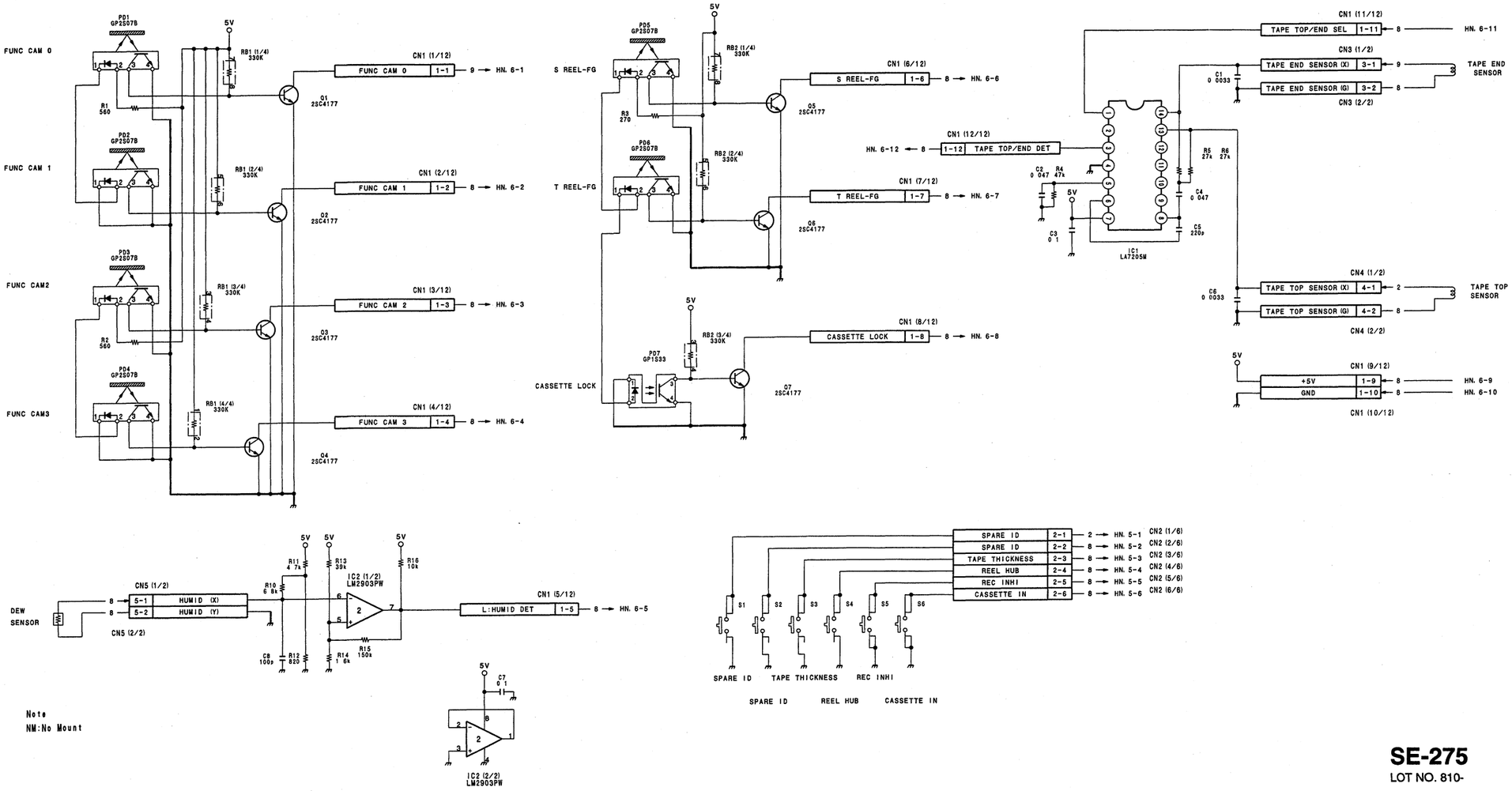

SE-275
LOT NO. 810-

DIF-75 (1/2) BKDW-702

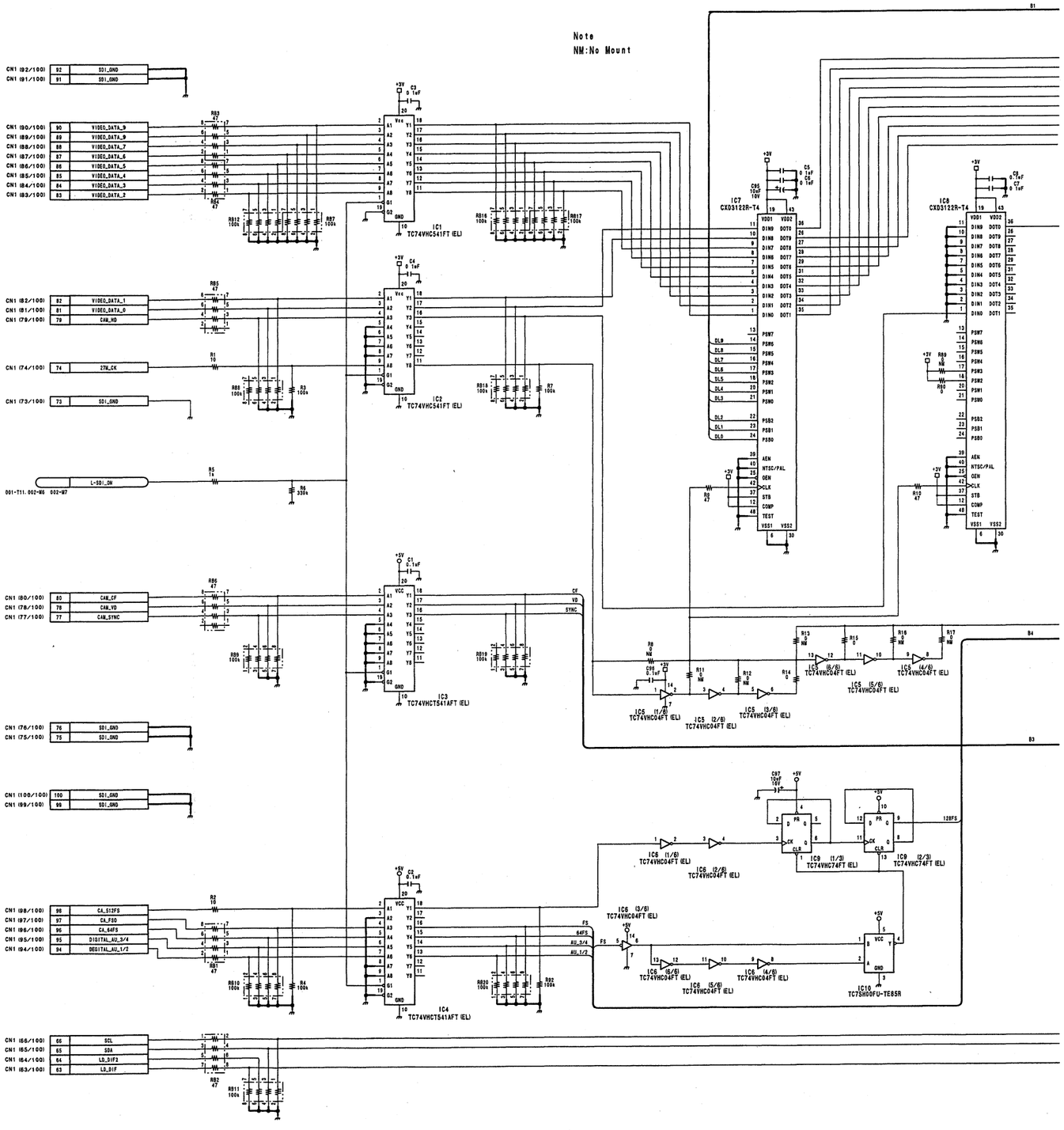

4-116

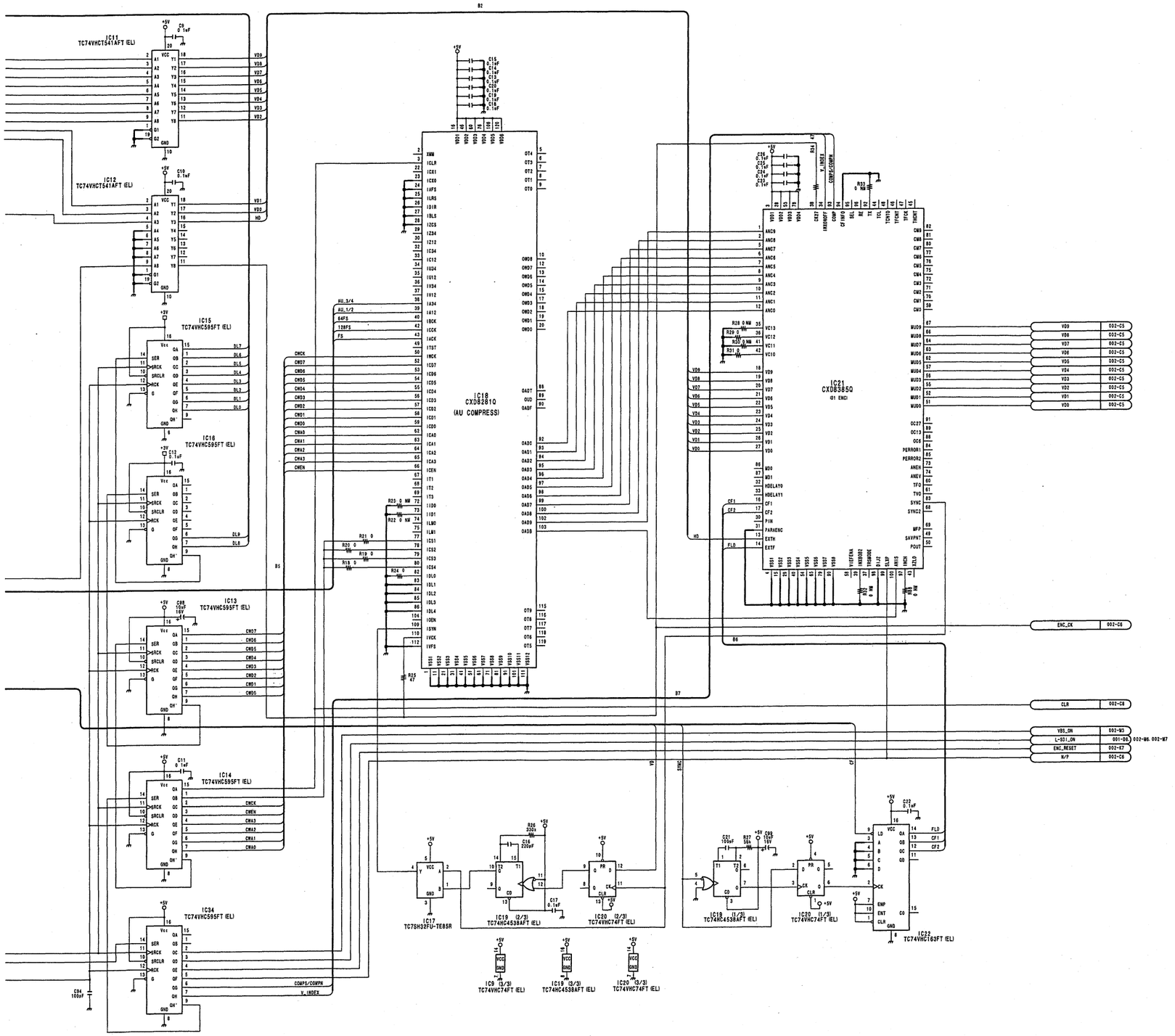

DIF-75 (1/2)
BKDW-702
LOT NO. 811-

DVW-790WS/709WS/707
DVW-790WSP/709WSP/707P P2V2

4-117 4-117

DIF-75 (2/2) BKDW-702

Note
NM:No Mount

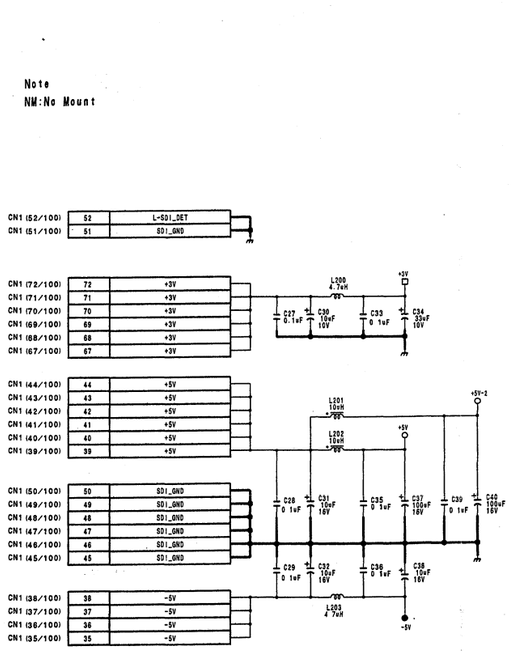

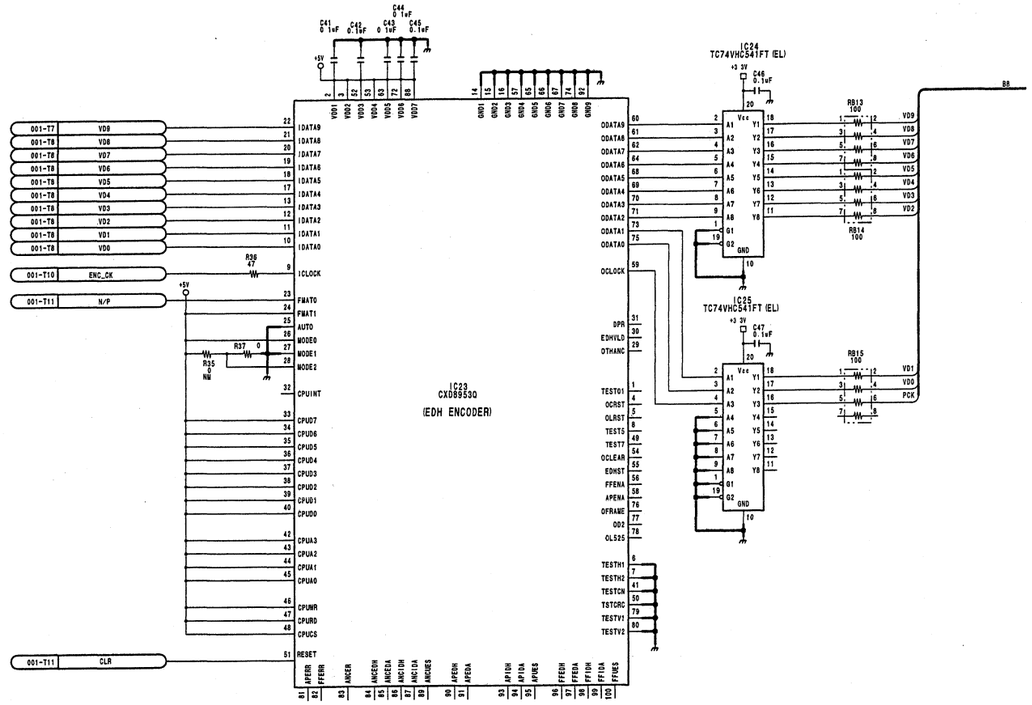

4-118

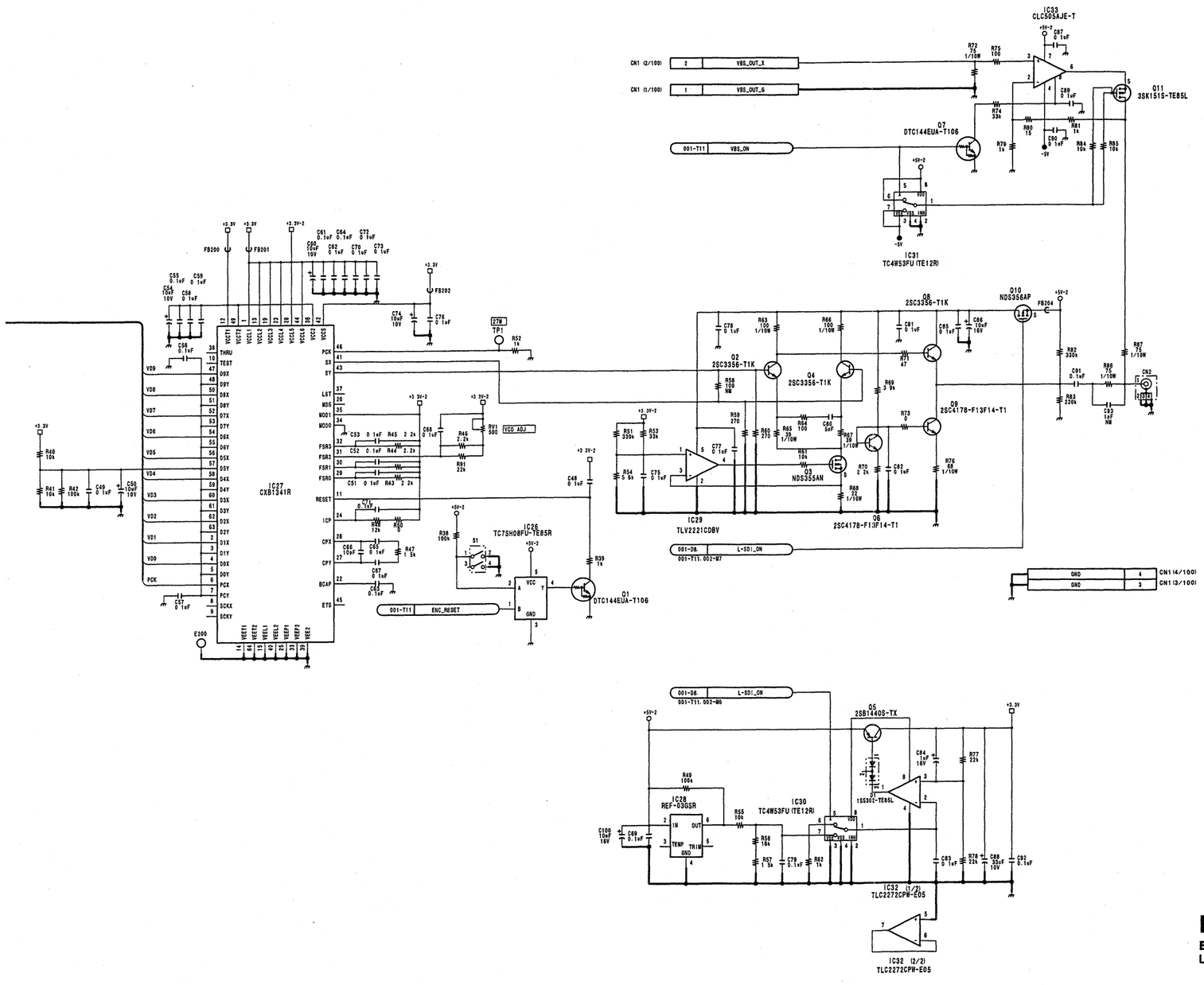

DIF-75 (2/2)
BKDW-702
LOT NO. 811-

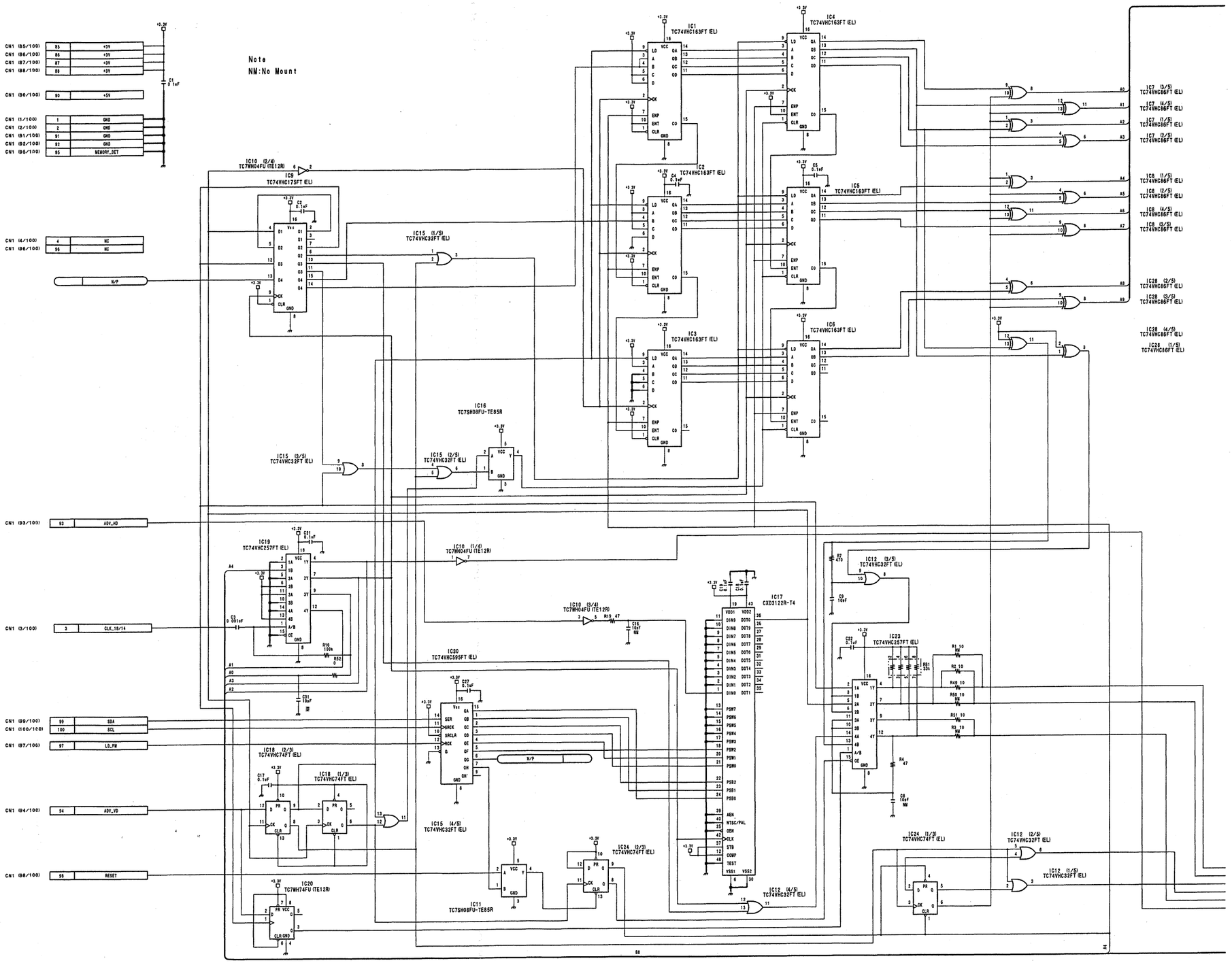
Note
NM:No Mount
CN1 (85/100) 85 +3V
CN1 (86/100) 86 +3V
CN1 (87/100) 87 +3V
CN1 (88/100) 88 +3V
CN1 (90/100) 90 +5V
CN1 (1/100) 1 GND
CN1 (2/100) 2 GND
CN1 (91/100) 91 GND
CN1 (92/100) 92 GND
CN1 (95/100) 95 MEMORY_DET
CN1 (4/100) 4 NC
CN1 (96/100) 96 NC
N/P
CN1 (93/100) 93 ADV_HD
CN1 (3/100) 3 CLK_18/14
CN1 (99/100) 99 SDA
CN1 (100/100) 100 SCL
CN1 (97/100) 97 LD_FW
CN1 (94/100) 94 ADV_VD
CN1 (98/100) 98 RESET
IC1 TC74VHC163FT (EL)
IC2 TC74VHC163FT (EL)
IC3 TC74VHC163FT (EL)
IC4 TC74VHC163FT (EL)
IC5 TC74VHC163FT (EL)
IC6 TC74VHC163FT (EL)
IC9 TC74VHC175FT (EL)
IC10 (2/4) TC7WH04FU (TE12R)
IC10 (1/4) TC7WH04FU (TE12R)
IC10 (3/4) TC7WH04FU (TE12R)
IC11 TC7SH08FU-TE85R
IC12 (4/5) TC74VHC32FT (EL)
IC12 (3/5) TC74VHC32FT (EL)
IC12 (2/5) TC74VHC32FT (EL)
IC12 (1/5) TC74VHC32FT (EL)
IC15 (1/5) TC74VHC32FT (EL)
IC15 (2/5) TC74VHC32FT (EL)
IC15 (3/5) TC74VHC32FT (EL)
IC15 (4/5) TC74VHC32FT (EL)
IC16 TC7SH08FU-TE85R
IC17 CXD3122R-T4
IC18 (1/3) TC74VHC74FT (EL)
IC18 (2/3) TC74VHC74FT (EL)
IC19 TC74VHC257FT (EL)
IC20 TC7WH74FU (TE12R)
IC23 TC74VHC257FT (EL)
IC24 (1/3) TC74VHC74FT (EL)
IC24 (2/3) TC74VHC74FT (EL)
IC30 TC74VHC595FT (EL)
IC7 (3/5) TC74VHC86FT (EL)
IC7 (4/5) TC74VHC86FT (EL)
IC7 (1/5) TC74VHC86FT (EL)
IC7 (2/5) TC74VHC86FT (EL)
IC8 (1/5) TC74VHC86FT (EL)
IC8 (2/5) TC74VHC86FT (EL)
IC8 (4/5) TC74VHC86FT (EL)
IC8 (3/5) TC74VHC86FT (EL)
IC28 (2/5) TC74VHC86FT (EL)
IC28 (3/5) TC74VHC86FT (EL)
IC28 (4/5) TC74VHC86FT (EL)
IC28 (1/5) TC74VHC86FT (EL)

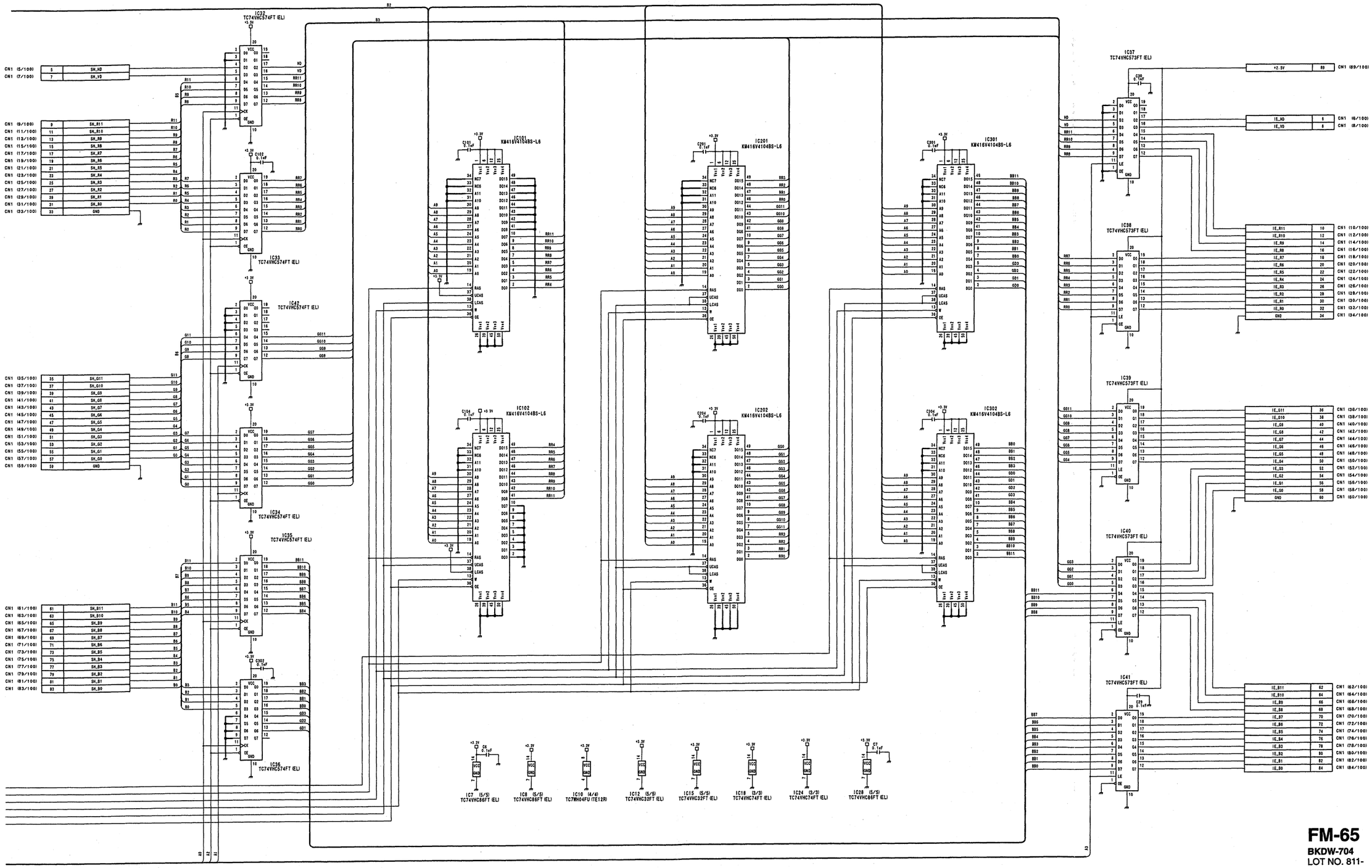

FM-65
BKDW-704
LOT NO. 811-

DVW-790WS/709WS/707
DVW-790WSP/709WSP/707P P2V2

4-121 4-121

MY-93 (1/2) BKDW-703

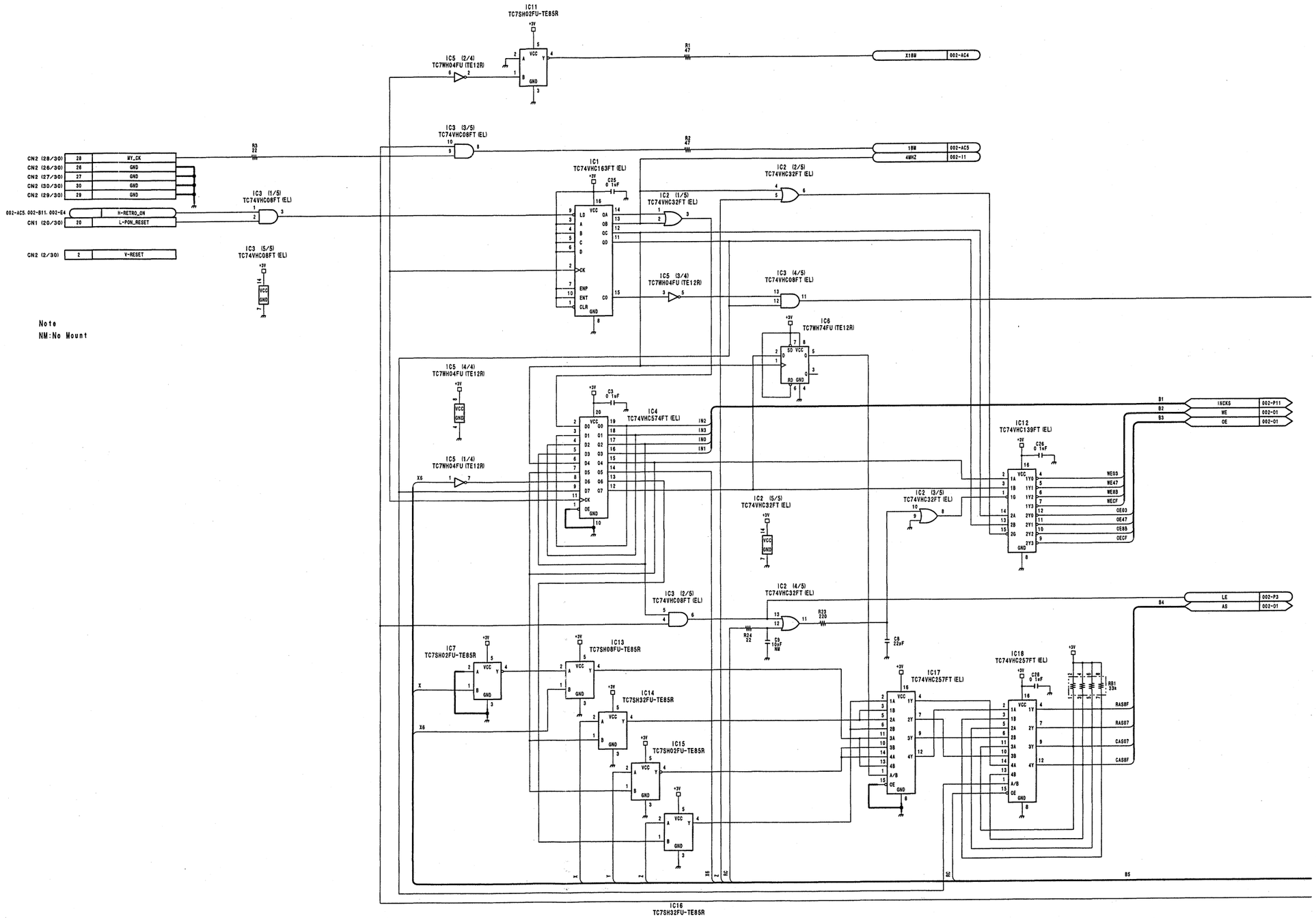

4-122

DVW-790WS/709WS/707
DVW-790WSP/709WSP/707P P2V2

MY-93 (1/2) BKDW-703

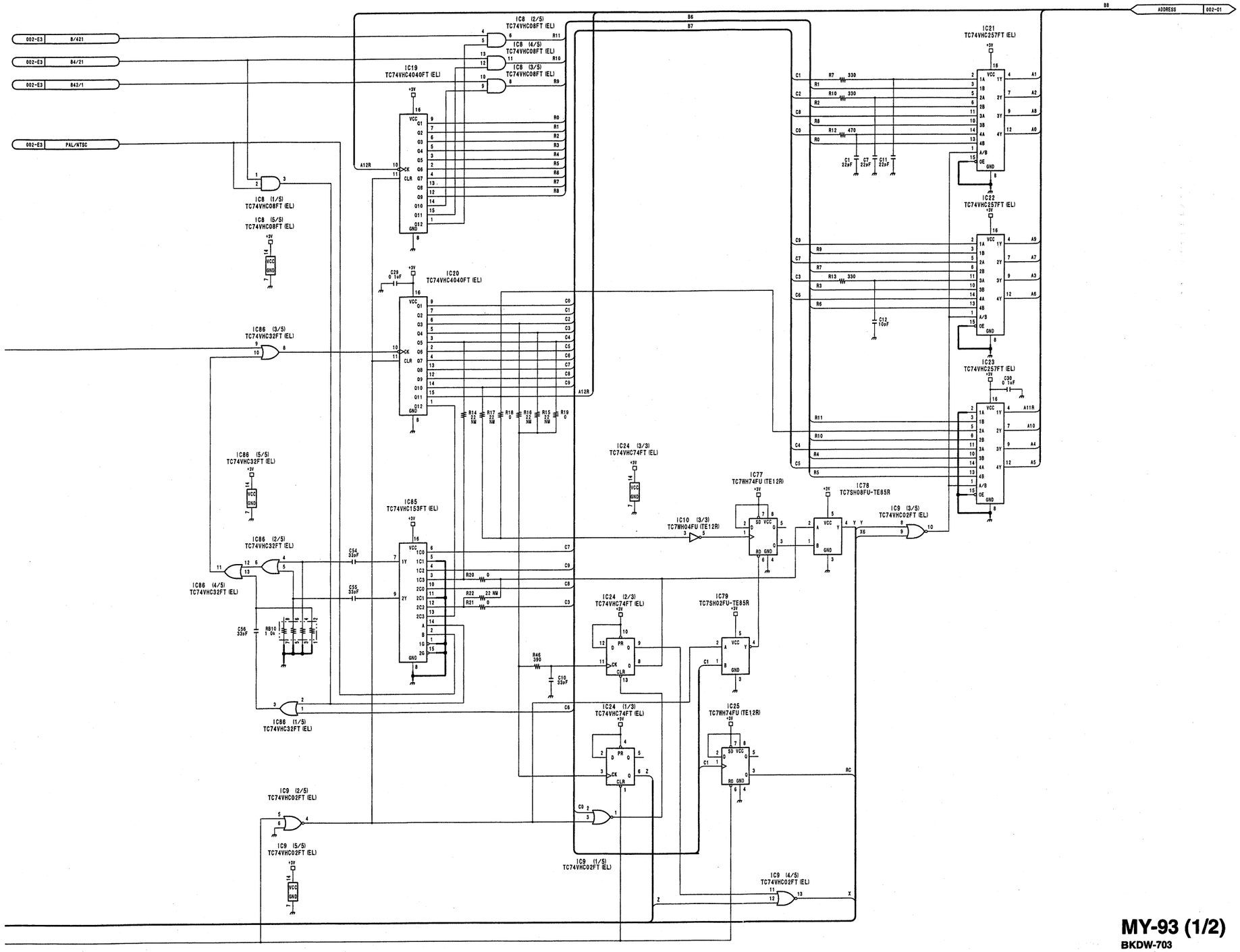

MY-93 (1/2)
BKDW-703
LOT NO. 811-

MY-93 (2/2) BKDW-703

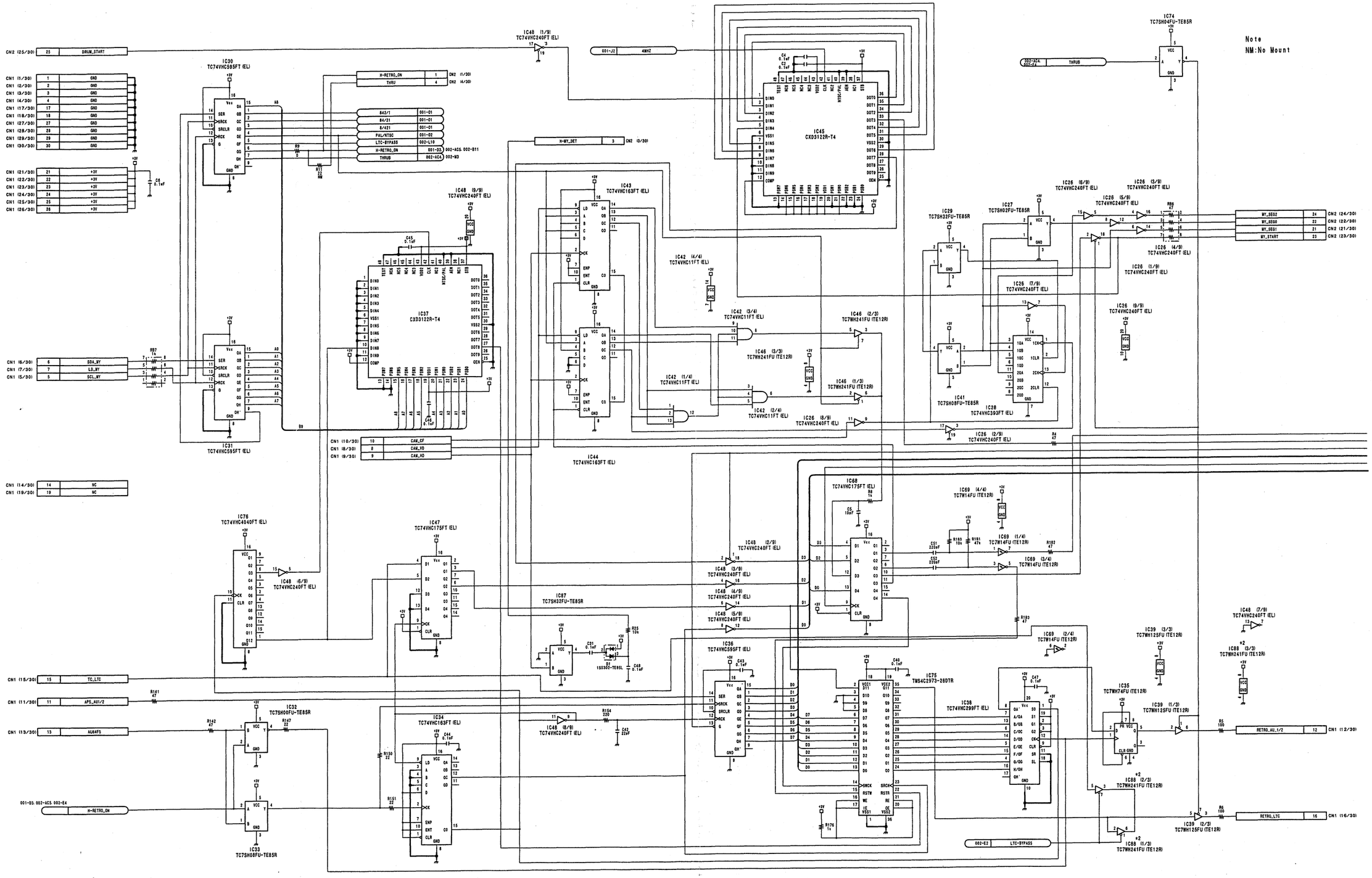

MY-93 (2/2) BKDW-703

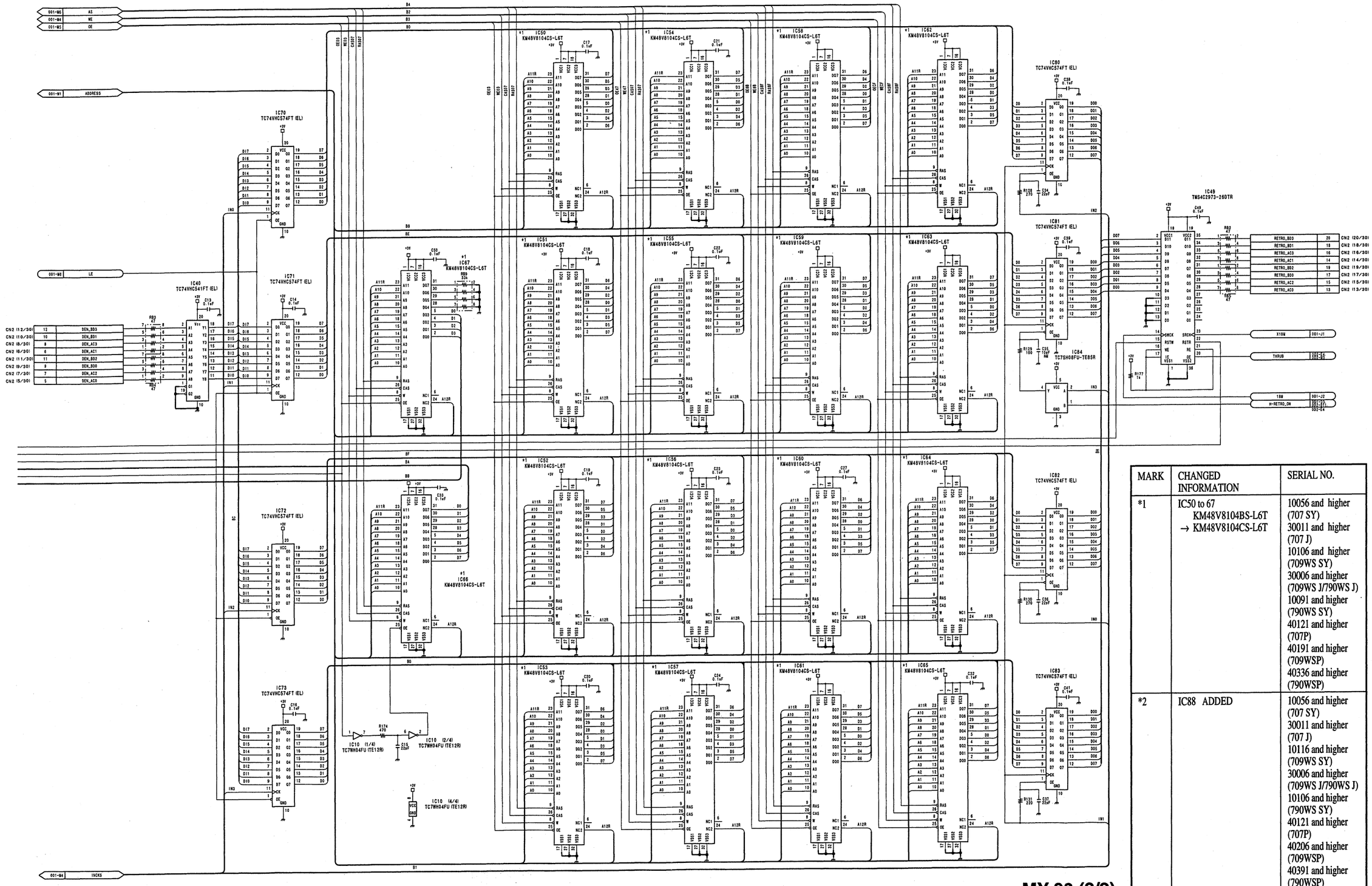

MARK	CHANGED INFORMATION	SERIAL NO.
*1	IC50 to 67 KM48V8104BS-L6T → KM48V8104CS-L6T	10056 and higher (707 SY) 30011 and higher (707 J) 10106 and higher (709WS SY) 30006 and higher (709WS J/790WS J) 10091 and higher (790WS SY) 40121 and higher (707P) 40191 and higher (709WSP) 40336 and higher (790WSP)
*2	IC88 ADDED	10056 and higher (707 SY) 30011 and higher (707 J) 10116 and higher (709WS SY) 30006 and higher (709WS J/790WS J) 10106 and higher (790WS SY) 40121 and higher (707P) 40206 and higher (709WSP) 40391 and higher (790WSP)

MY-93 (2/2)
BKDW-703
LOT NO. 811-

DVW-790WS/709WS/707
DVW-790WSP/709WSP/707P P2V2

Frame (1/4) CI-20, LP-109, RM-180, SW-973, VSE-32

Note
NM :No Mount

VIEW FINDER

CN106 FEMALE EXTERNAL VIEW

CN1

1	VTR SAVE	3 23-8
2	NON STD	4 23-7
3	V SIZE	1 23-6
4	R/T DOWN	6 23-5
5	COL DET	8 23-3
6	N/P	1 23-12
7	DISP	7 23-16
8	G TALLY	9 23-4
9		IDI
10	Y (O)	9 23-18
11	ZEBRA	6 23-14
12	VIDEO (O)	IDI 23-10
13	AV LEVEL	8 23-13
14	B-Y	6 23-2
15	R-Y	2 23-1
16	BATT IND	3 23-15
17	R/T UP	4 23-11
18	+9.3V	2 23-20
19	UNREG (O)	0 23-19
20	UNREG +12V	1 23-17

HN101 HARNESS (MB811-DR)

CN8

1	UNREG
2	UNREG
3	UNREG GND
4	UNREG GND

HN102 HARNESS (DR-MB811)

CN33

P3 DR-387 CN2

1	GND
2	-11V
3	-11V
4	+15V
5	+7V
6	+7V
7	+5V
8	+5V
9	-5V
10	-5V

CN31

IF-716 CN400

CN40

1	+4.8V
2	FRONT MIC CONT
3	GND
4	CAM MIC AGC (O)
5	CAM MIC AGC (Y)
6	CAM MIC (O)
7	CAM MIC (C)
8	CAM MIC (Y)

HN103 HARNESS (IF716-MB811)

HN104 HARNESS (MB810-IF716)

P2 IF-716 CN500

CN50

1	SCL (SW)
2	SDA (SW)
3	LENS TX
4	LENS RX
5	UNREG +12V
6	LENS GND
7	VTR S/S SW
8	IRIS CONT
9	IRIS PSTN
10	ZOOM PSTN
11	FOCUS PSTN
12	L.RET CONT

IF-716 CN600

CN60

1	FRONT MIC CONT
2	-5V
3	GND
4	+5V
5	ROTARY B
6	ROTARY A
7	ROTARY PUSH

HN105 HARNESS (IF716-MB810)

HN106 HARNESS (VF)

SV-210

CN1 100P
CN14 100P

CN23

20	+9.3V	19	UNREG GND
18	VF VIDEO (O)	17	UNREG +12V
16	BATT IND	15	ZEBRA
14	VF MIC VR	13	VF MIC SEL
12	REC TALLY	11	VF VIDEO (C)
10	VF VIDEO (Y)	9	VF VIDEO (O)
8	MIC SEL	7	MIC GND
6	BOX STD	5	V SIZE
4	REC (TALLY GROUND)	3	COLOR DET
2	VF B-Y	1	VF R-Y

CN32

1	POWER SW
2	LIGHT OFF
3	LIGHT CONT

CN51

1	BACK TALLY
2	+5V

CN5

80	REC DH DATA (Y)	79	
78	REC CH DATA (Y)	77	
76	REC CG DATA (Y)	75	
74	REC BF DATA (Y)	73	
72	REC AE DATA (Y)	71	
70	GND	69	GND
68	W.REG.INHIBIT	67	
66	WFA ENABLE	65	
64	WFA +5V	63	
62	L.POWER RET	61	
60	WFA +5V	59	REC +5V
58	WFA CH (O)	57	
56	WFA CG (O)	55	
54	WFA BF (O)	53	
52	WFA AE (O)	51	
50	VF MIC VR	49	
48	VF MIC SEL	47	
46	PB ADJ REF	45	
44	GND	43	
42	PB DH RF (O)	41	
40	PB DH RF (C)	39	
38	PB CH RF (O)	37	
36	PB CG RF (O)	35	
34	PB CG RF (C)	33	
32	PB BF RF (O)	31	
30	PB BF RF (C)	29	
28	PB AE RF (O)	27	
26	PB AE RF (C)	25	
24	GND	23	
22	GND	21	
20	GND	19	
18	GND	17	
16	L.SERVO CS	15	
14	L.SY RELAY	13	
12	L.SERVO DATA	11	
10	SCI SY TO SV	9	
8	SDA (SW)	7	
6	SCL (SW)	5	
4	VEL.INFO.FALL	3	
2	POWER SW	1	
80	VF B-Y	79	
78	VF R-Y	77	
76	VF VIDEO (O)	75	
74	VF VIDEO (C)	73	
72	GND	71	
70	GND	69	
68	VBS OUT (C)	67	
66	VBS OUT (O)	65	
64	GND	63	
62	GND	61	
60	RET VIDEO (C)	59	
58	RET VIDEO (O)	57	
56	L.Y RESET	55	
54	SCI SY CK	53	
52	SCI SY DATA	51	
50	PB A/E SEL	49	
48	PB C/H SEL	47	
46	PB B/F SEL	45	
44	SAT AE EN	43	
42	SAT CG EN	41	
40	REC A/E SEL	39	
38	SAT CG EN	37	
36	EDIT AUDIO 1/2	35	
34	EDIT AUDIO 3/4	33	
32	EDIT AUDIO 1/2	31	
30	SEG 1 FIELD	29	
28	SEG 2 FIELD	27	
26	SEG 1	25	
24	SEG 0	23	

HN107 HARNESS (MB-PSW)

CN10

POWER SW
S107

SW-973

CN1

1-1	LIGHT CONT (PS)
1-2	POWER SW

AUTO / MANUAL S1

CN3

LIGHT OFF (MB)	3-2
LIGHT CONT (MB)	3-3
POWER SW	3-1

HN109 HARNESS (SW973-MB811)

LP-109

S101 RL01 470 D101 GL3UR8 C101 0.1 CHASSIS GND

CN101

+5V	1
BACK TALLY	2

HN108 HARNESS (LP109-MB811)

DCP-17

AD-155
ES-23 (for DVW-790WS/709WS/707)
ES-23P (for DVW-790WSP/709WSP/707P)
BF-74/FM-65 (BKDW-704)
RC-69
RC-75
(for DVW-790WS/790WSP/709WS/709WSP)

CN2 50P CN1 100P
CN1 50P CN2 100P

P3

CN-1573 (for DVW-707/707P)

DVP-17

DVP-14
MY-93 (BKDW-703)

CN3 50P CN4 100P
CN3 50P CN4 100P

MB-811

FAN101 FAN102

CN54

1	FUN PULSE1
2	MOTOR GND1

CN55

1	FAN PULSE2
2	MOTOR GND2

CN53

50	UNREG GND	50	
49	UNREG GND	49	
48	UNREG +12V	48	
47	UNREG +12V	47	
46	GND	46	
45	GND	45	
44	CA S12 FS	44	
43	CA S4 FS	43	
42	DIGITAL AU 3/4	42	
41	DIGITAL AU 1/2	41	
40	DIGITAL AU 3/4	40	
39	DIGITAL AU 1/2	39	
38	+3V	38	
37	+3V	37	
36	CAM CK27 (O)	36	
35	CAM CK27 (C)	35	
34	VIDEO DATA0	34	
33	VIDEO DATA1	33	
32	VIDEO DATA2	32	
31	VIDEO DATA3	31	
30	VIDEO DATA4	30	
29	VIDEO DATA5	29	
28	VIDEO DATA6	28	
27	VIDEO DATA7	27	
26	VIDEO DATA8	26	
25	VIDEO DATA9	25	
24	VIDEO DIR	24	
23	SYNC DIR	23	
22	D GND	22	
21	D GND	21	
20	CA FSO	20	
19	CA FSC (O)	19	
18	CA SY	18	
17	CA CF	17	
16	CA HD	16	
15	CA VD	15	
14	DA DIGITAL AUEN	14	
13	EXT EN	13	
12	RET VIDEO (C)	12	
11	RET VIDEO (O)	11	
10	V RESET/CF	10	
9	EXT TALLY	9	REC ALARM
8	H CONT (O)	8	
7	H CONT (C)	7	
6	GND	6	
5	GND	5	
4	CA DATA	4	
3	CA DATA (O)	3	
2	SKG	2	
1	BLKG	1	

CN3

CI-21

CN12 100P HN-260 (CN21) P4

HN111 FLAT CABLE (FFC-20P-1D) (20P)

CN21

GND		GND	
CAM MIC (O)	2	CAM MIC (C)	2
CAM MIC (C)	3	CAM MIC (Y)	3
CAM MIC AGC (O)	4	CAM MIC AGC (Y)	4
FRONT MIC CONT	5	REC CUE (O)	5
REC CUE (C)	6	PB CUE (O)	6
PB CUE (C)	7	GND	7
GND	8	GND	8
GND	9	GND	9
GND	10	GND	10
	11		11
	12		12
	13		13
	14		14
	15	REMOTE INT	15
	16	TAKE DIRECTION	16
	17	GATED FB CTL	17
	18	FB TC	18
	19	REC TC	19
	20		20

MB-810

TC-101 CN121

4-126

DVW-790WS/709WS/707
DVW-790WSP/709WSP/707P P2V2

Frame (1/4) CI-20, LP-109, RM-180, SW-973, VSE-32

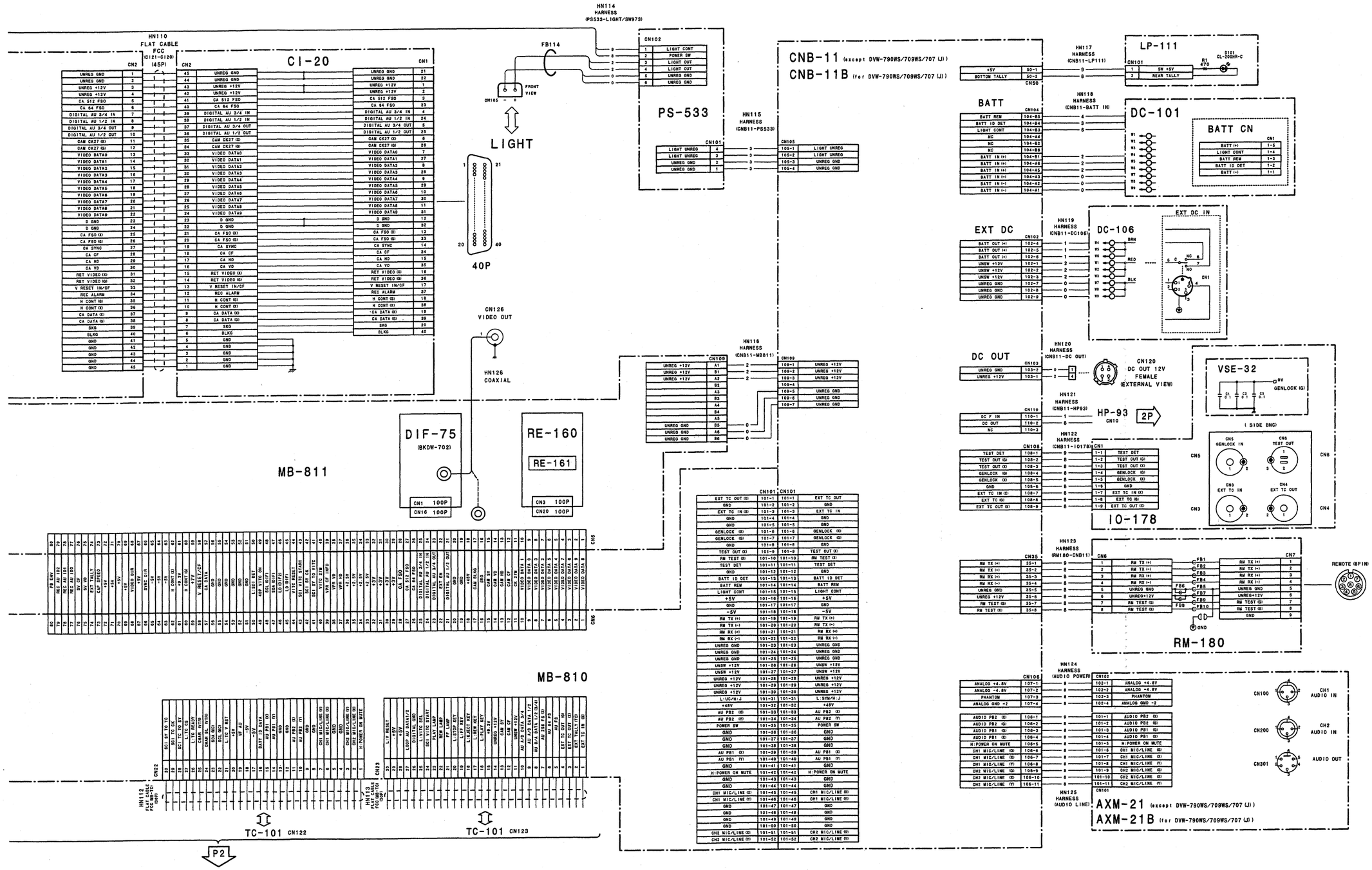

Frame (1/4)

Frame (2/4) HP-93, KY-293, SW-971/972/973, VR-248

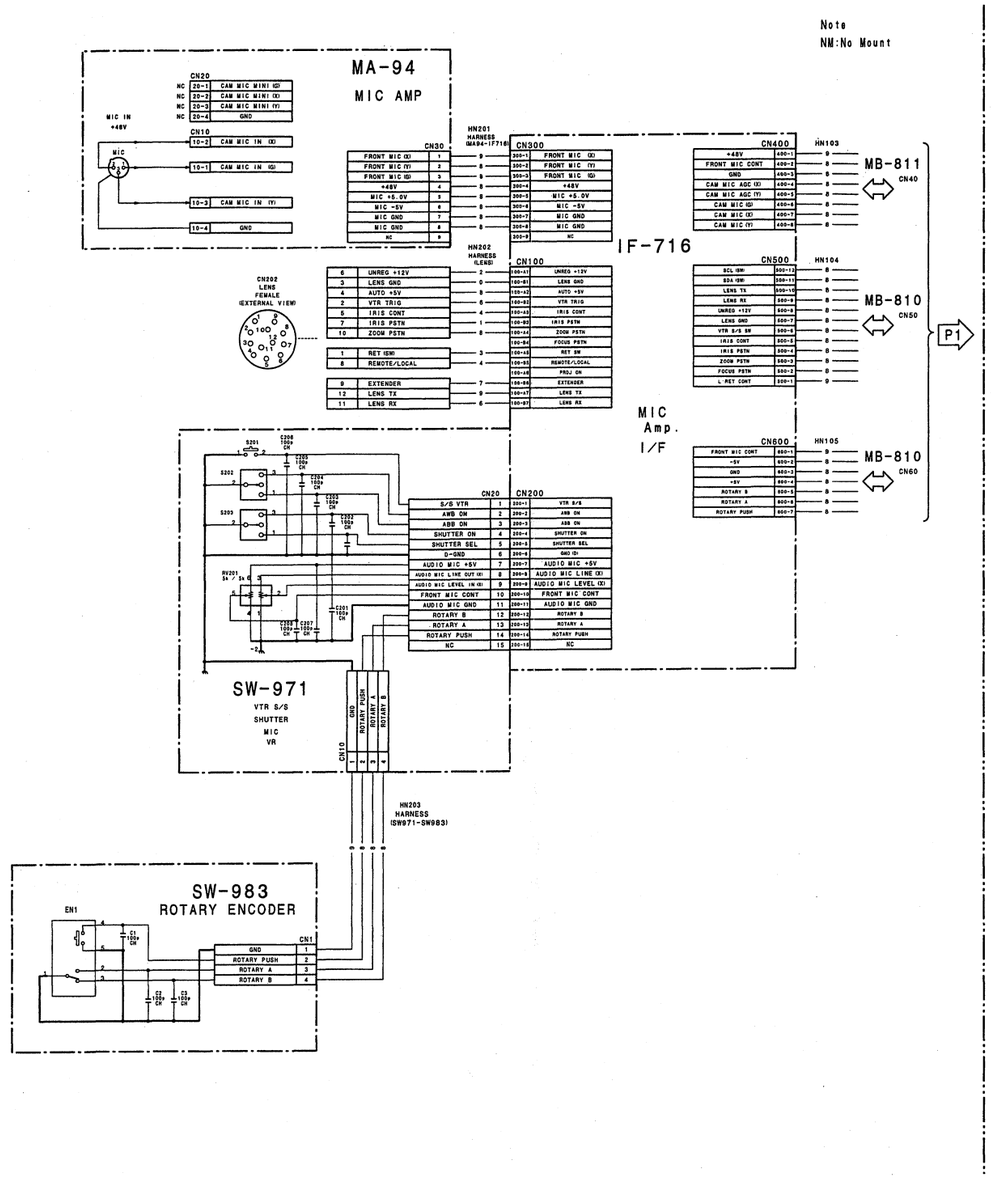

Frame (2/4) HP-93, KY-293, SW-971/972/973, VR-248

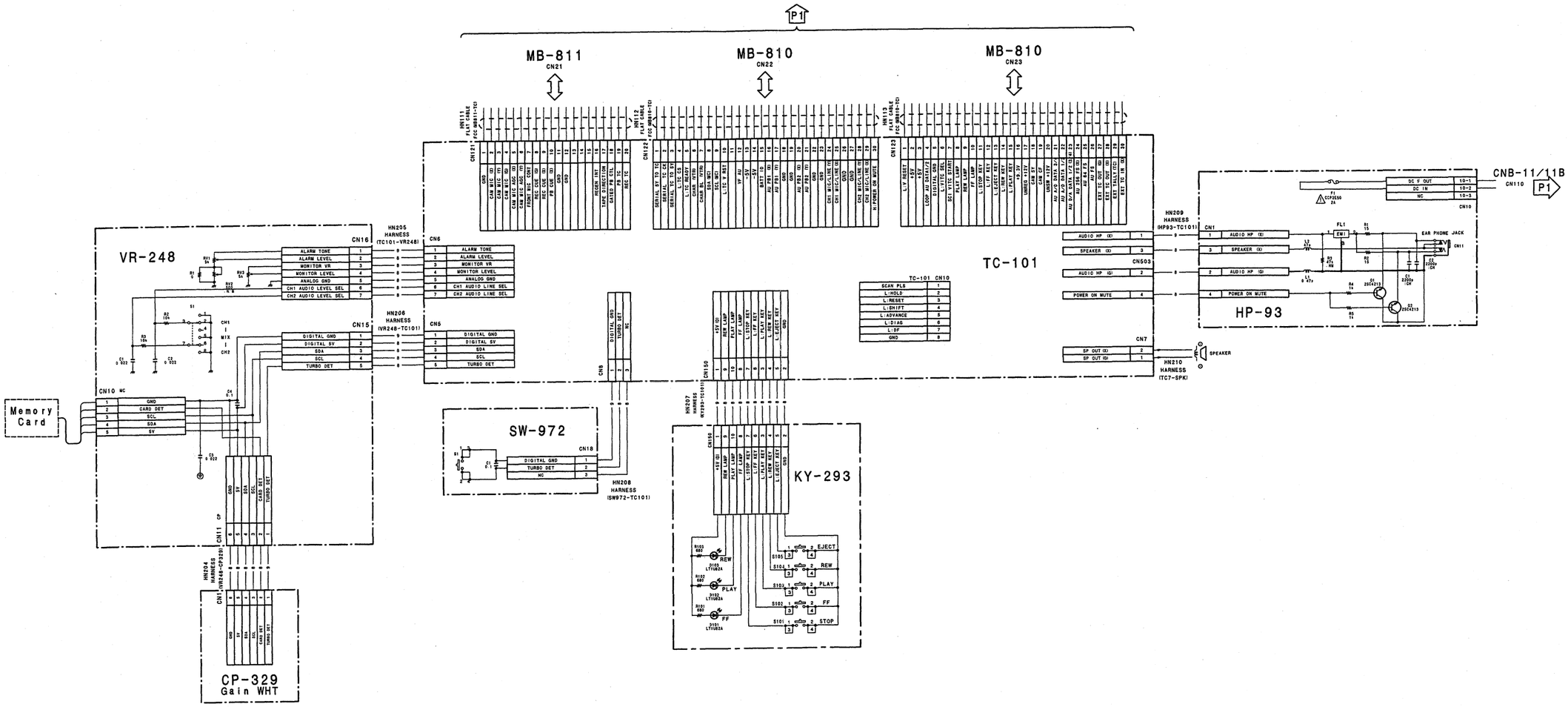

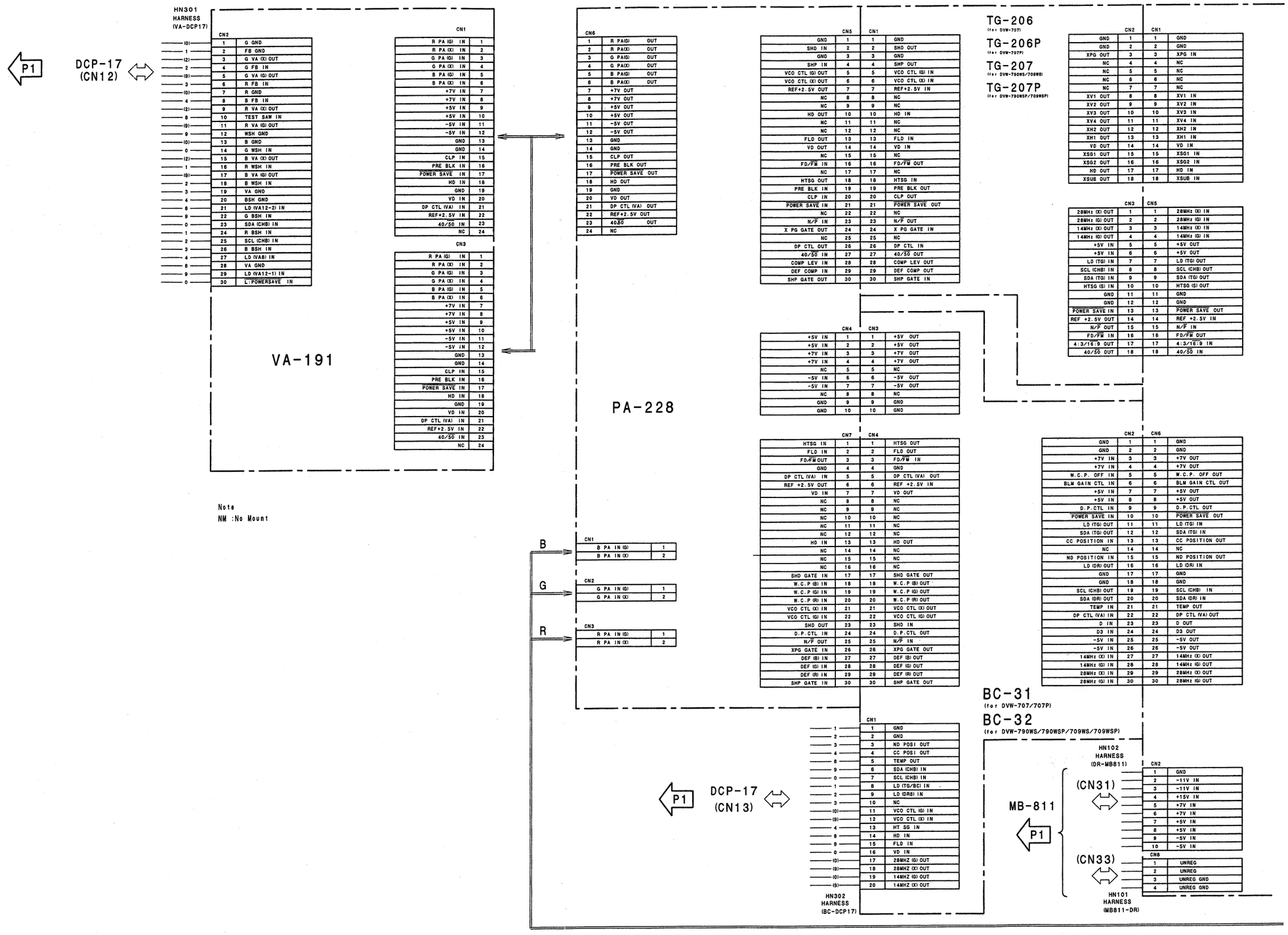

Note
NM :No Mount

Frame (3/4)

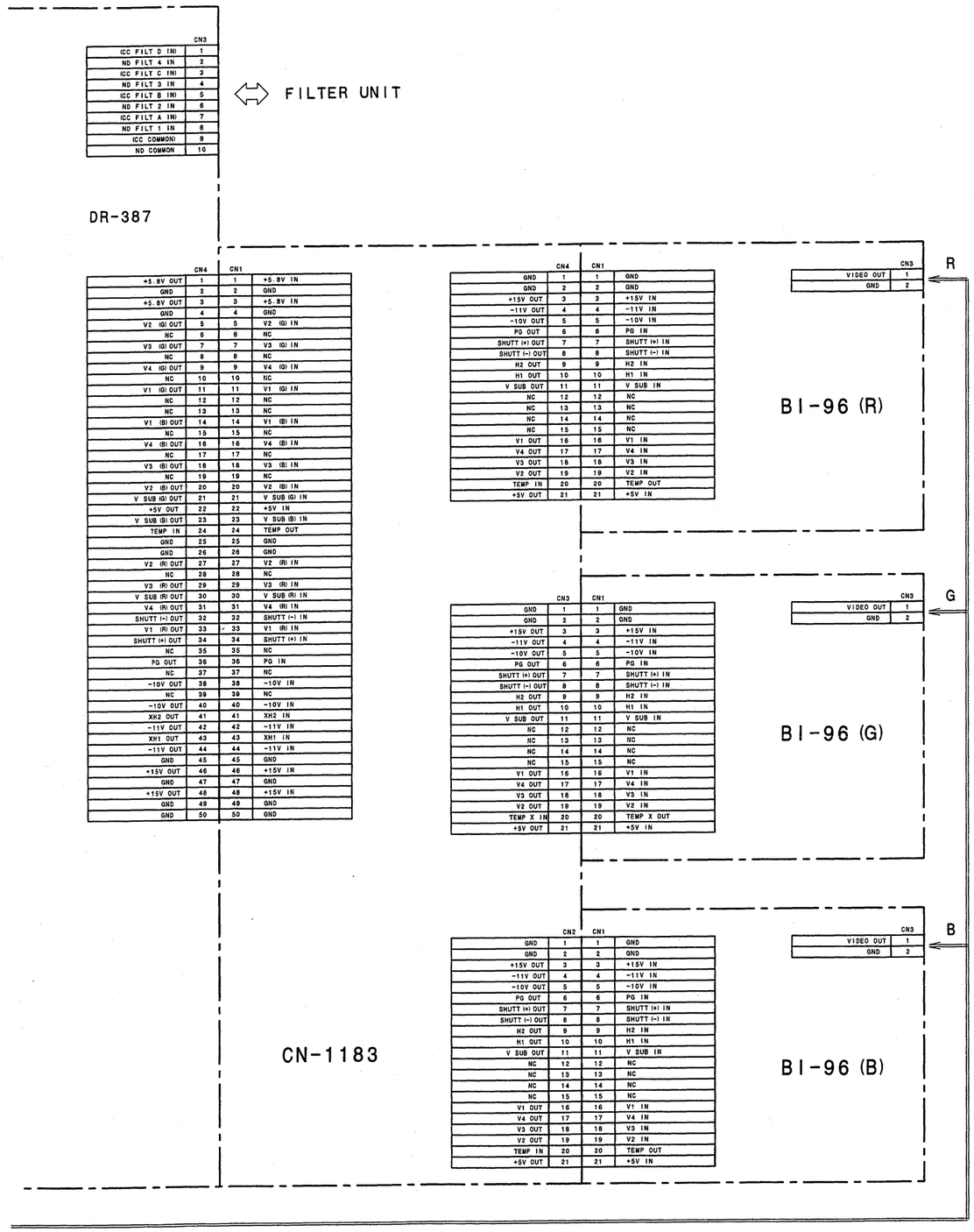

Frame (3/4)

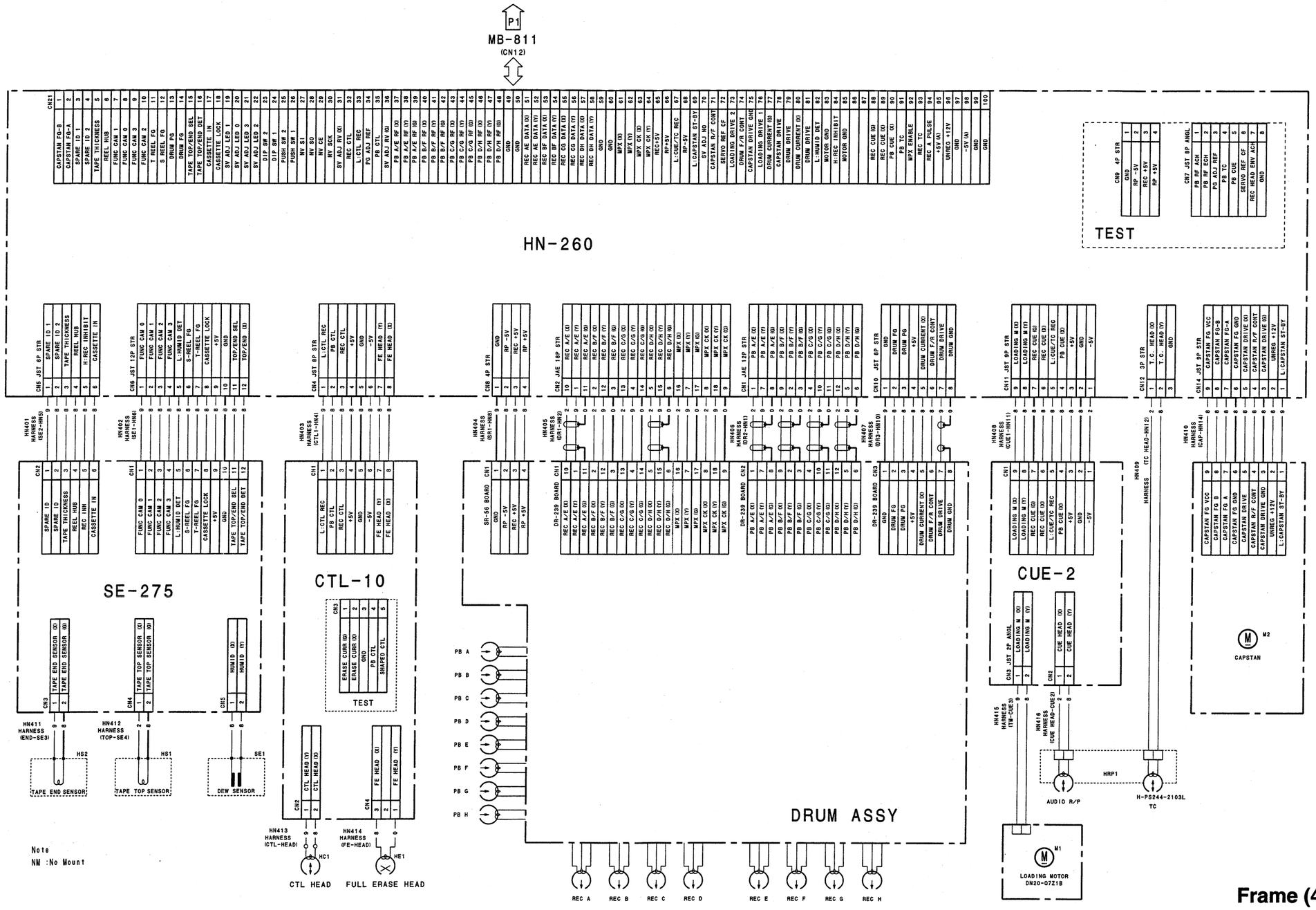
P1
MB-811
(CN12)
CN21
CAPSTAN FG-B
CAPSTAN FG-A
SPARE ID 1
SPARE ID 2
TAPE THICKNESS
REEL HUB
FUNC CAM 1
FUNC CAM 0
FUNC CAM 3
FUNC CAM 2
T-REEL FG
S-REEL FG
DRUM FG
TAPE TOP/END SEL
TAPE TOP/END DET
CASSETTE IN
SV ADJ LED 1
SV ADJ LED 0
SV ADJ LED 3
SV ADJ LED 2
DIP SW 2
DIP SW 1
PUSH SW 2
PUSH SW 1
NV SI
NV SO
NV CE
NV SCK
SV ADJ RV (X)
REC CTL
L-CTL REC
PG ADJ REF
PB CTL
SV ADJ RV (G)
PB A/E RF (X)
PB A/E RF (Y)
PB A/E RF (G)
PB B/F RF (X)
PB B/F RF (Y)
PB B/F RF (G)
PB C/A RF (X)
PB C/A RF (Y)
PB C/A RF (G)
PB D/A RF (X)
PB D/A RF (Y)
PB D/A RF (G)
GND
REC AE DATA (X)
REC AE DATA (Y)
REC BF DATA (X)
REC BF DATA (Y)
REC CG DATA (X)
REC CG DATA (Y)
REC DH DATA (X)
REC DH DATA (Y)
GND
GND
MPX (X)
MPX (Y)
MPX CK (X)
MPX CK (Y)
REG+5V
RP+5V
L-CUE/TC REC
HP-5V
L-CAPSTAN ST-BY
SV ADJ HO
CAPSTAN F/F CONT
SERVO REF CF
+5V (A)
DRUM F/R CONT
CAPSTAN DRIVE GND
LOADING DRIVE 1
LOADING DRIVE 2
DRUM CURRENT (X)
CAPSTAN DRIVE
DRUM DRIVE
DRUM CURRENT (X)
L-HUMID DET
MOTOR GND
H-REC INHIBIT
MOTOR GND
REC CUE (G)
REC CUE (X)
PB CUE (X)
PB TC
MPX ENABLE
REC TC
REC A PULSE
+5V (A)
UNREG +12V
GND
-5V (A)
GND
GND
GND
HN-260
TEST
CN9 4P STR
GND
RP -5V
REC +5V
RP +5V
CN7 JST 8P ANGL
PB RF ADJ
PB RF ACH
PB RF GCH
PG ADJ REF
PB TC
PB CUE
SERVO REF CF
REC HEAD ENV ACH
GND
CN5 JST 8P STR
SPARE ID 1
SPARE ID 2
TAPE THICKNESS
REEL HUB
H-REC INHIBIT
CASSETTE IN
CN6 JST 12P STR
FUNC CAM 0
FUNC CAM 1
FUNC CAM 3
FUNC CAM 2
L-HUMID DET
S-REEL FG
T-REEL FG
CASSETTE LOCK
+5V
GND
TOP/END SEL
TOP/END (X)
CN4 JST 8P STR
L-CTL REC
PB CTL
REC CTL
+5V
GND
-5V
FE HEAD (Y)
FE HEAD (X)
CN8 4P STR
GND
RP -5V
REC +5V
RP +5V
CN2 JAE 18P STR
REC A/E (X)
REC A/E (Y)
REC A/E (G)
REC B/F (X)
REC B/F (Y)
REC B/F (G)
REC C/G (X)
REC C/G (Y)
REC C/G (G)
REC D/H (X)
REC D/H (Y)
REC D/H (G)
MPX (X)
MPX (Y)
MPX (G)
MPX CK (X)
MPX CK (Y)
MPX CK (G)
CN1 JAE 12P STR
PB A/E (X)
PB A/E (Y)
PB A/E (G)
PB B/F (X)
PB B/F (Y)
PB B/F (G)
PB C/G (X)
PB C/G (Y)
PB C/G (G)
PB D/H (X)
PB D/H (Y)
PB D/H (G)
CN10 JST 8P STR
GND
DRUM FG
DRUM PG
+5V
DRUM CURRENT (X)
DRUM F/R CONT
DRUM DRIVE
DRUM GND
CN11 JST 9P STR
LOADING M (X)
LOADING M (Y)
REC CUE (G)
REC CUE (X)
L-CUE/TC REC
PB CUE (X)
+5V
GND
-5V
CN12 3P STR
T.C. HEAD (X)
T.C. HEAD (Y)
GND
CN14 JST 9P STR
CAPSTAN FG VCC
CAPSTAN FG-B
CAPSTAN FG-A
CAPSTAN FG GND
CAPSTAN DRIVE
CAPSTAN R/F CONT
CAPSTAN DRIVE GND
UNREG +12V
L-CAPSTAN ST-BY
HN401 HARNESS (SE2-HN5)
HN402 HARNESS (SE1-HN6)
HN403 HARNESS (CTL1-HN4)
HN404 HARNESS (DR1-HN8)
HN405 HARNESS (DR1-CN2)
HN406 HARNESS (DR2-HN1)
HN407 HARNESS (DR3-HN10)
HN408 HARNESS (CUE1-HN11)
HN409 HARNESS (TC HEAD-HN12)
HN410 HARNESS (CAP-HN14)
SE-275
CTL-10
SR-56 BOARD
DR-239 BOARD
CUE-2
CAPSTAN
CN3 JST 2P ANGL
LOADING M (X)
LOADING M (Y)
CN2
CUE HEAD (X)
CUE HEAD (Y)
CN5
ERASE CURR (G)
ERASE CURR (X)
GND
PB CTL
SHAPED CTL
TEST
CN3
TAPE END SENSOR (X)
TAPE END SENSOR (G)
CN4
TAPE TOP SENSOR (X)
TAPE TOP SENSOR (G)
CN5
HUMID (X)
HUMID (Y)
HN411 HARNESS (END-SE3)
HN412 HARNESS (TOP-SE4)
HS2
HS1
SE1
TAPE END SENSOR
TAPE TOP SENSOR
DEW SENSOR
CN2
CTL HEAD (Y)
CTL HEAD (X)
CN4
FE HEAD (X)
FE HEAD (Y)
HN413 HARNESS (CTL-HEAD)
HN414 HARNESS (FE-HEAD)
HC1
HE1
CTL HEAD
FULL ERASE HEAD
PB A
PB B
PB C
PB D
PB E
PB F
PB G
PB H
DRUM ASSY
REC A
REC B
REC C
REC D
REC E
REC F
REC G
REC H
HN415 HARNESS (M-CN3)
HN416 HARNESS (CUE HEAD-CUE2)
HRP1
AUDIO R/P
H-PS244-2103L
TC
M1
LOADING MOTOR
DN20-07218
M2
CAPSTAN
Note
NM :No Mount

Frame (4/4)

Section 5
Board Layouts

Board Layout Index

		Page
A.	AD-155	5-12
	AXM-21/21B	5-28
B.	BF-74	5-12
	BI-96	5-3
C.	CI-20	5-16
	CI-21	5-16
	CN-1183	5-8
	CN-1573	5-16
	CNB-11	5-30
	CP-329	5-34
	CTL-10	5-23
	CUE-2	5-28
D.	DC-101	5-30
	DC-106	5-30
	DCP-17	5-9
	DIF-75	5-37
	DR-387	5-7
	DVP-14	5-20
	DVP-17	5-17
E.	ES-23/23P	5-14
F.	FM-65	5-38
H.	HN-260	5-24
	HP-93	5-34
I.	IF-716	5-29
	IO-178	5-34
K.	KY-293	5-34
L.	LP-109	5-34
	LP-111	5-34
M.	MA-94	5-29
	MB-810	5-31
	MB-811	5-32
	MY-93	5-39
P.	PA-228	5-3
	PS-533	5-30
R.	RC-69	5-13
	RC-75	5-13
	RM-180	5-35
S.	SE-275	5-35
	SV-210	5-22
	SW-971	5-36
	SW-972	5-36
	SW-973	5-36
	SW-983	5-36
T.	TC-101	5-25
	TG-206/206P	5-5
	TG-207/207P	5-6
V.	VA-191	5-4
	VR-248	5-29
	VSE-32	5-36

Circuit Functions

System	Name	Function	Page
CCD BLOCK	BI-96	CCD Imager (R, G, B)	5-3
	CN-1183	Connector for BI-96	5-8
	DR-387	CCD Driver	5-7
	PA-228	Pre-amp (Sample & Hold)	5-3
	TG-206*1	Timing Generator	5-5
	TG-207*2	Timing Generator	5-6
	VA-191	Video Amp	5-4
CAMERA/VIDEO	AD-155	A/D Converter	5-12
	BF-74	Connector for DCP-17	5-12
	CN-1573*1	Connector for DCP-17	5-16
	RC-69*2+RC-75*2	Rate (16:9 to 4:3) Converter	5-13
	DCP-17	Camera Processor	5-9
	DVP-14	Digital Bit Reduction Decoder, Digital Encoder, Digital Decoder, Timing Clock Generator	5-20
	DVP-17	RF, Digital Audio Processor, System Controller for VTR Block	5-17
	ES-23	Composite Encoder	5-14
	TC-101	Analog Audio Processor, Time Code Generator	5-25
HEAD/SERVO	CTL-10	CTL/Erase Head Amp	5-23
	CUE-2	CUE Head Amp	5-28
	HN-260	Harness, Head Amp (REC Head PB)	5-24
	SV-210	Servo Controller	5-22
MICROPHONE	IF-716	Lens Control, Mic Amp	5-29
	MA-94	Camera Mic Pre-amp	5-29
	SW-971	Mic Level, Auto White/Black SW, VTR Start/Stop SW, Shutter On/Off Select SW	5-36
POWER SUPPLY	DC-101	Battery DC Filter	5-30
	PS-533	Power Supply (Light)	5-30
CONNECTOR BOX	AXM-21	Connector (AUDIO IN/OUT), Audio Pre-amp	5-28
	CNB-11	Circuit Breaker	5-30
	DC-106	External DC Filter	5-30
	IO-178	Connector (GEN LOCK IN, TEST OUT, TC IN, TC OUT)	5-34
	LP-111	Rear Tally	5-34
	RM-180	Connector (RM)	5-35
	VSE-32	GENLOCK IN Filter	5-36

*1 : For DVW-707/707P only
*2 : For DVW-790WS/790WSP/709WS/709WSP only

System	Name	Function	Page
OTHERS	CI-20	Connector (40-pin)	5-16
	CI-21	40-pin Adaptor Interface	5-16
	CP-329	Switch Panel	5-34
	HP-93	Earphone	5-34
	KY-293	Function Key	5-34
	LP-109	Back Tally, Back Tally Switch	5-34
	MB-810	Motherboard	5-31
	MB-811	Motherboard	5-32
	SE-275	Sensor	5-35
	SW-972	Turbo Gain Switch	5-36
	SW-973	Menu and Light Auto/Manual Switch	5-36
	SW-983	Rotary Encoder Switch	5-36
	VR-248	Memory Card, Audio Select Switch, Alarm Level, Monitor Level	5-29
OPTION	FM-65*3 (BKDW-704)	Image Inverter Board	5-38
	DIF-75 (BKDW-702)	SDI Output Board	5-37
	MY-93 (BKDW-703)	Picture Cache Board	5-39

*3 : Dedicated optional board for DVW-790WS/790WSP/709WS/709WSP.

5-2

SONY-SP1386 / DRUCK 162

BI-96 (1-662-321-11)
---

*:B SIDE

C1	B3	Q1	B2
C2	A1	Q2	D3
C3	B2	Q3	A3
C5	A3	Q4	A3
C6	A3		
C7	C3	R1	A3
C8	C2	R2	B2
C9	C3	R3	A1
C10	C3	R4	B3
C11	D3	R5	B3
C12	B2	R6	B3
C13	D2	R7	B2
C14	C2	R8	B2
C16	C3	R9	B2
		R10	C3
CN3	*D3	R11	D3
		R12	D3
D1	B2	R13	D3
D2	B2	R14	D3
D3	A1	R15	D3
D4	B3	R16	D2
D5	C2	R17	A3
		R31	B3
IC1	D2		
IC2	*A1		
IC3	*C2		
IC4	*B1		

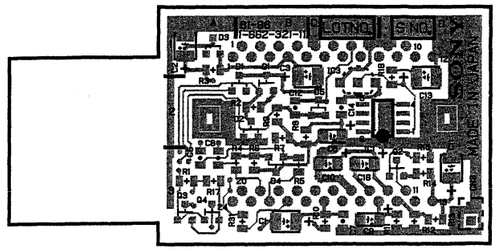

BI-96 -A SIDE-
SUFFIX:-11

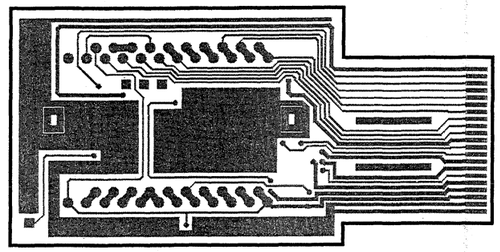

BI-96 -B SIDE-
SUFFIX:-11

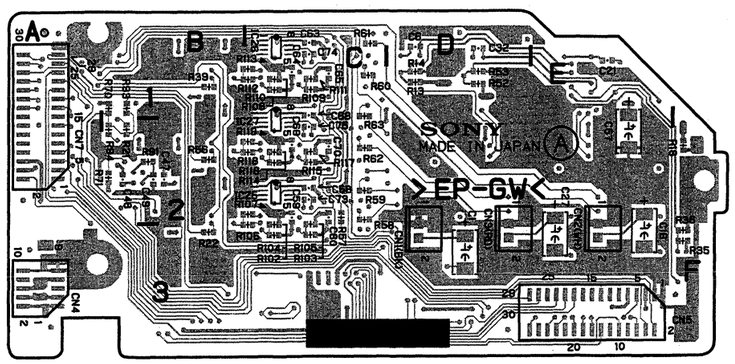

PA-228 -A SIDE-
SUFFIX:-11

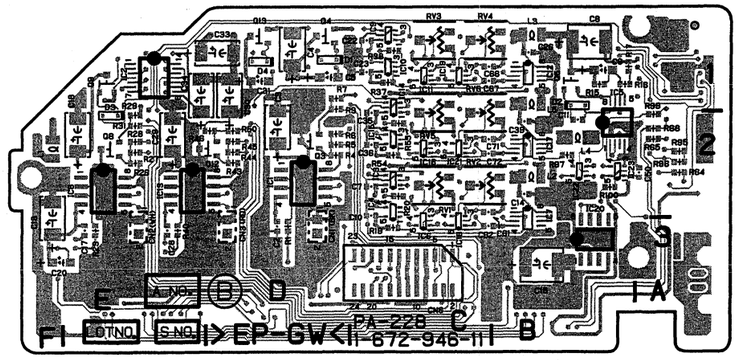

PA-228 -B SIDE-
SUFFIX:-11

PA-228 (1-672-946-11)
---

*:B SIDE

C1	D3	C21	E1	C50	*A2	C74	C1	IC3	*C2	IC21	*C2
C2	*D3	C22	*C1	C57	E2	C75	C2	IC4	*C2	IC22	*B2
C3	*D2	C23	*C1	C58	C2			IC5	*B2	IC23	*B2
C4	*D1	C26	*B1	C59	C2	CN1	D3	IC6	*C3	IC25	C2
C5	*D1	C27	E3	C60	C2	CN2	E3	IC7	*B3	IC26	C1
C6	D1	C28	*E3	C61	*C2	CN3	D3	IC8	*E2	IC27	C2
C7	*C2	C29	*E2	C62	*C3	CN4	A3	IC9	*C1		
C8	*B1	C30	*D1	C63	C1	CN5	E3	IC10	*C1	L1	*F2
C9	*B1	C31	*D1	C64	C1	CN6	*C3	IC11	*C1	L2	*B2
C10	*C2	C32	D1	C65	C1	CN7	A1	IC12	*B1	L3	*B1
C11	*B2	C33	*D1	C66	*C1			IC13	*E2	L4	*B2
C14	*B2	C34	*E1	C67	*C1	D1	*D1	IC14	*C1	L5	*B1
C15	*B3	C35	*C2	C68	C1	D2	*B1	IC15	*C2		
C16	E3	C36	*C2	C69	C2	D3	*E2	IC16	*C2	Q3	*D2
C17	*E3	C39	*B2	C70	C2	D4	*D1	IC17	*B2	Q4	*D1
C18	*E2	C47	B2	C71	*C2			IC18	*C3	Q5	*B1
C19	*F2	C48	B2	C72	*C2	IC1	*D2	IC19	*C1	Q8	*E2
C20	*F3	C49	B2	C73	C2	IC2	*E1	IC20	*B3	Q9	*E1

Q12	*D2	R22	B3	R52	D1	R93	B1	R113	C1
Q13	*D1	R23	*E3	R53	D1	R94	B2	R114	C2
		R26	*E2	R54	*C2	R95	*A2	R115	C2
R1	*D3	R27	*E2	R55	*C2	R96	*A2	R116	C2
R4	*D2	R28	*E2	R56	B2	R97	*B2	R117	C2
R5	*D2	R29	*E2	R57	C2	R99	*A2	R118	C2
R6	*D2	R31	*E2	R58	C2	R100	*B2	R119	C2
R7	*D1	R35	F3	R59	C2	R102	C3		
R9	*D1	R36	F3	R60	C1	R103	C3	RV1	*C2
R13	D1	R37	*C1	R61	C1	R104	C3	RV2	*C2
R14	D1	R38	*C1	R62	C2	R105	C3	RV3	*C1
R15	*B1	R39	B1	R63	C1	R106	C3	RV4	*C1
R16	*B1	R40	*E3	R64	*A2	R107	C2	RV5	*C2
R17	*B1	R43	*D2	R65	*A2	R108	C1	RV6	*C2
R18	F2	R44	*D2	R68	*A2	R109	C1		
R19	*C3	R45	*D2	R70	B1	R110	C1		
R20	*C2	R46	*D2	R71	B2	R111	C1		
R21	B2	R50	*D2	R91	B2	R112	C1		

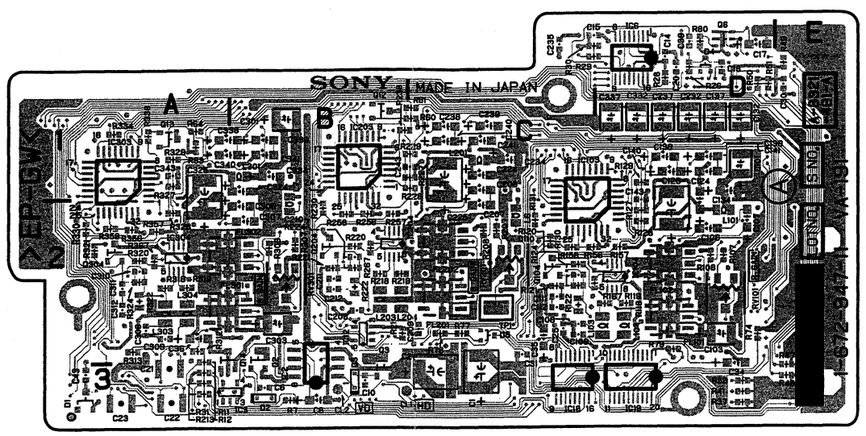

VA-191 -A SIDE-
SUFFIX:-11

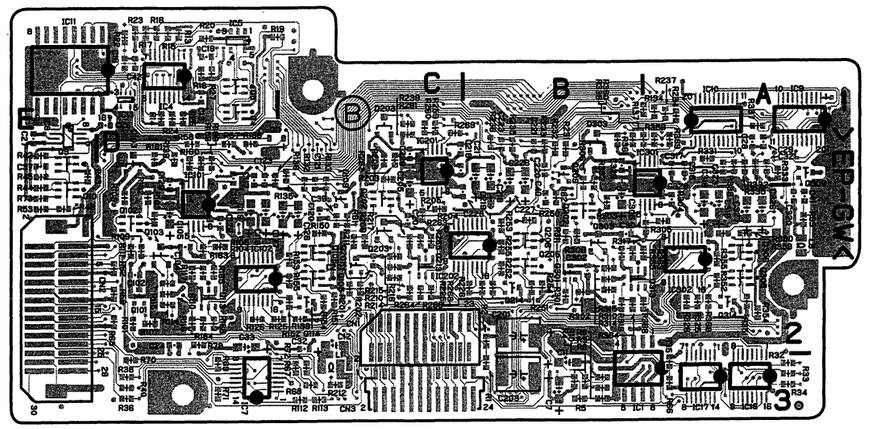

VA-191 -B SIDE-
SUFFIX:-11

VA-191 (1-672-947-11)
---

*:B SIDE

C1	C3	C102	*D2	C209	C2	C318	*A2	FL301	A2	L201	C1	Q305	*A2	R36	*D3
C2	C3	C103	D2	C210	B2	C319	*A2	FL302	A2	L203	B2	Q306	*A2	R37	D3
C6	B3	C104	*D2	C211	B2	C320	*A2			L204	B2	Q309	*A1	R38	*D3
C7	*B3	C105	*D2	C212	B2	C321	*A1	IC1	*A2	L301	B1	Q313	*B2	R39	D3
C8	B3	C106	D2	C216	*C1	C323	*A1	IC2	B3	L303	A2	Q314	*A2	R40	*D3
C10	B3	C107	D2	C217	*C1	C324	B1	IC3	B3	L304	A2			R41	D3
C11	*B3	C108	C2	C218	*B1	C325	A1	IC4	*D1			R1	*B3	R42	*E1
C12	*C2	C109	C2	C219	*B1	C326	*A2	IC5	*D1	Q2	B2	R2	*B2	R43	*E1
C13	*D1	C110	C2	C220	*B1	C327	*A2	IC6	D1	Q3	B3	R3	*B3	R44	*E1
C14	D1	C111	C2	C221	*B1	C328	*A2	IC7	*C3	Q4	*D1	R4	*B3	R45	*E1
C15	C1	C112	C2	C223	*B1	C329	*B1	IC8	*E1	Q5	*D1	R5	*B3	R46	*E2
C16	*D1	C116	*D1	C224	C1	C332	D1	IC9	*A1	Q6	D1	R6	*B3	R47	E3
C17	D1	C117	*D1	C225	C1	C334	B1	IC10	*A1	Q9	*E1	R7	B3	R48	E3
C18	D1	C118	*D2	C226	*B1	C337	D1	IC11	*D1	Q10	*E2	R9	*B3	R49	E1
C19	*D1	C119	*D2	C227	*B1	C338	A1	IC12	B2	Q11	*D1	R10	*B3	R50	D1
C20	D1	C120	*C2	C228	*B2	C339	B1	IC13	*D1	Q12	B1	R11	A2	R51	D1
C21	A3	C121	*C1	C229	*C1	C340	A1	IC16	*A3	Q13	A1	R12	A3	R53	*E2
C22	A3	C123	*D1	C232	D1	C341	B1	IC17	*A3	Q14	A2	R13	*D1	R57	*D1
C23	A3	C124	D2	C234	C1	C343	A1	IC18	C2	Q101	*D2	R14	*D1	R58	*D1
C24	*D2	C125	D2	C235	C1			IC19	D2	Q102	*D2	R15	*D1	R59	*D2
C25	C2	C126	*C2	C237	D1	CL1	B3	IC101	*D1	Q103	*D2	R16	*D1	R60	C1
C26	*D1	C127	*C2	C238	C1	CL2	B3	IC102	*D2	Q104	C2	R17	*D1	R61	C1
C27	*E1	C128	*D2	C239	C1			IC103	C2	Q105	*C2	R18	*D1	R62	*D2
C28	*A1	C129	*D1	C240	C1	CN1	*C2	IC104	D2	Q106	*C2	R19	*C1	R63	A1
C29	*A1	C132	D1	C241	C1	CN2	*E2	IC201	*C1	Q109	*C2	R20	*D1	R64	A1
C30	E1	C134	D1	C243	C1	CN3	*C3	IC202	*B2	Q113	*D2	R21	B2	R65	*D2
C31	C2	C137	D1	C301	B1			IC203	B1	Q114	*C2	R22	*D1	R66	*A3
C32	*C2	C138	D1	C302	*B2	D1	A3	IC204	B2	Q201	*C2	R23	*D1	R67	*C3
C33	*D2	C139	D1	C303	B2	D2	B3	IC301	*A1	Q202	*C2	R24	*D1	R68	*C3
C34	D3	C140	D1	C304	*B2	D3	B3	IC302	*A2	Q203	*C2	R25	*D1	R69	*D3
C35	C2	C141	D1	C305	*B2	D4	D1	IC303	A1	Q204	B2	R26	D1	R70	*D3
C36	A2	C143	D2	C306	B2	D5	C2	IC304	A2	Q205	*B2	R27	*D1	R71	*D3
C37	*E1	C201	*B2	C307	B2	D103	*D1			Q206	*B2	R28	D1	R72	*C3
C38	D1	C202	*C2	C308	A2	D203	*C1	L1	*C3	Q209	*B1	R29	C1	R73	*E2
C39	*C2	C203	*B3	C309	A2	D303	*B1	L6	C2	Q213	*C2	R30	C1	R74	D2
C40	*B2	C204	*C2	C310	A2			L7	B2	Q214	*B2	R31	A3	R76	C2
C41	*A2	C205	*C1	C311	A2	FL101	D2	L8	*A2	Q301	*B2	R32	*A3	R77	C2
C42	*D1	C206	C1	C312	A2	FL102	D2	L101	D2	Q302	*B2	R33	*A3	R78	*D2
C43	A3	C207	C2	C316	*A1	FL201	C2	L103	D2	Q303	*B2	R34	*A3	R79	D2
C101	D1	C208	B2	C317	*A1	FL202	C2	L104	D2	Q304	A2	R35	*A3	R80	D1

R81	*C2	R139	*D1	R220	B2	R302	*B2	R353	*A2						
R82	*B2	R150	*C2	R221	B2	R303	*B2	R354	*A2						
R83	*A2	R151	*C2	R222	B2	R304	*A2	R355	*A2						
R101	*D2	R152	*C2	R224	B2	R305	*A2	R356	A2						
R102	*D2	R153	*C2	R225	*B2	R306	*B1	R357	A2						
R103	*D2	R154	*C2	R226	*B2	R307	B2	R358	A2						
R104	*D2	R155	*C2	R227	C1	R308	B2	R359	*A1						
R105	*D2	R156	C2	R228	C1	R309	*B2	R360	*A1						
R106	*D2	R157	D2	R229	C1	R310	*B2	R361	*B1						
R107	D2	R158	C2	R230	B2	R311	*B2	R362	*B1						
R108	D2	R159	*D1	R231	*B1	R312	A2	R363	*B2						
R109	*D2	R160	*D1	R232	*B1	R313	A2	R364	*B2						
R110	*D2	R161	*D1	R233	*B1	R314	*B2	R365	*A2						
R111	*D2	R162	*D2	R234	*A1	R315	*B2	R366	*A2						
R112	*C3	R163	*D2	R235	*B1	R316	*B2	R367	A2						
R113	*C3	R164	*D2	R236	*B1	R317	*B2	R368	*A2						
R114	*D2	R165	*D2	R237	*A1	R318	A2	R369	*A1						
R115	*D2	R166	*D2	R238	B1	R319	A2								
R116	*D2	R167	C2	R239	*C1	R320	A2	RV101	D2						
R117	*D2	R168	*C2	R250	*B2	R321	A2	RV201	C2						
R118	D2	R169	*D1	R251	*B2	R322	A2	RV301	B2						
R119	D2	R201	*C2	R252	*B2	R324	A2								
R120	C2	R202	*C2	R253	*B2	R325	*A2	TP1	C2						
R121	C2	R203	*C1	R254	*B2	R326	*A2								
R122	C2	R204	*C2	R255	*B2	R327	A1								
R124	C2	R205	*C2	R256	B2	R328	A2								
R125	*C2	R206	*C1	R257	B2	R329	A1								
R126	*D2	R207	C2	R258	B2	R330	A2								
R127	D2	R208	C2	R259	*C1	R331	*A1								
R128	D2	R209	*C2	R260	*C1	R332	*A1								
R129	D1	R210	*C2	R261	*C1	R333	*A1								
R130	C2	R211	*C2	R262	*C1	R334	A1								
R131	C2	R212	*C3	R263	*C2	R335	*A1								
R132	*C1	R213	A3	R264	*C2	R336	*A1								
R133	*C1	R214	*C2	R265	*C2	R337	*A1								
R134	*A1	R215	*C2	R266	*C2	R338	A1								
R135	*C1	R216	*C2	R267	B2	R339	*B1								
R136	*D1	R217	*C2	R268	*B2	R350	*A2								
R137	*A1	R218	B2	R269	*C1	R351	*A2								
R138	*D1	R219	B2	R301	*B2	R352	*A2								

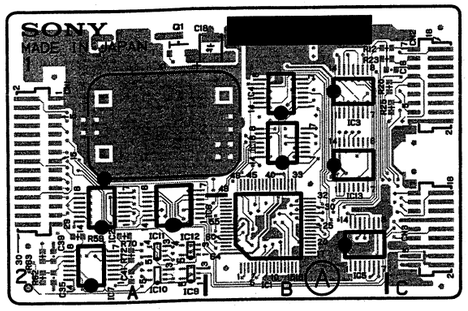

TG-206/206P -A SIDE-
SUFFIX:-12

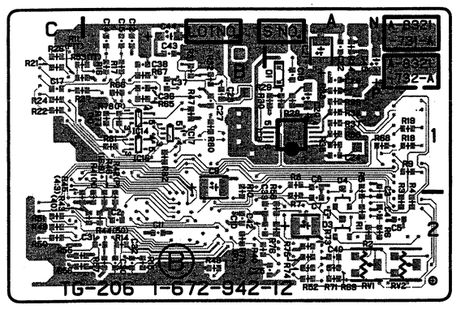

TG-206/206P -B SIDE-
SUFFIX:-12

DVW-707 (J) : S/N 30006 ahd Higher
DVW-707 (SY) : S/N 10021 and Higher
DVW-707P : S/N 40036 and Higher

TG-206/206P (1-672-942-12)
---

*:B SIDE

C1	*A2	CN1	A1	R14	*B2	R55	*C2
C2	*B2	CN2	C1	R15	*B2	R56	*C2
C3	*A1	CN3	C2	R16	*B1	R57	*B2
C4	*A2			R17	*B1	R58	*A2
C5	*A2	D1	*A1	R18	*A1	R59	A2
C7	*A2	D3	*A2	R19	*A1	R62	A2
C8	*A1	D4	*A2	R20	C1	R63	A2
C9	*B1			R21	*C1	R65	*B1
C10	*B2	IC1	B2	R22	*C1	R66	*B1
C11	*B2	IC2	A2	R23	C1	R67	*B1
C12	*B1	IC3	B1	R24	*C1	R68	*A1
C14	*B1	IC4	B1	R25	C1	R69	*A2
C15	*B1	IC5	B2	R26	*C1	R70	A2
C16	C1	IC6	A2	R27	*C1	R71	*A2
C17	*C1	IC7	A2	R28	*A1	R72	A2
C18	B1	IC8	*A1	R29	*A1	R73	*A2
C19	*A1	IC9	A2	R30	*A1	R74	*A2
C20	*A1	IC10	A2	R31	*B1	R75	*A2
C21	*A1	IC11	A2	R32	*B1	R76	*A2
C22	*A1	IC12	A2	R33	*A1	R77	*B1
C23	*B1	IC13	B1	R34	*A1	R78	*B1
C24	*A1	IC14	*B1	R35	*A1	R79	*B2
C25	*A2	IC16	*B1	R36	*A1	R80	*B1
C27	*B1	IC17	*B1	R37	*A1	R81	*B1
C28	*A1	IC18	B1	R38	*A1	R82	*B1
C30	*B2			R39	*A1		
C31	*B2	Q1	A1	R40	*B2	RV1	*A2
C32	*B2			R41	*B2	RV2	*A2
C33	*A2	R1	*A2	R42	*B2		
C35	A2	R2	*A2	R43	*B2	X1	A1
C36	*B1	R3	*A2	R44	*B2		
C37	*B1	R4	*A2	R45	*C2		
C38	*B1	R5	*A1	R46	*B2		
C39	A2	R6	*A2	R47	*B1		
C40	*A2	R7	*A2	R48	*B2		
C41	A2	R8	*A1	R49	*C2		
C42	*A2	R9	*A1	R50	*C2		
C43	*B1	R10	*B1	R51	*C2		
C44	*B1	R11	*C1	R52	*A2		
C45	*A1	R12	C1	R53	*C1		

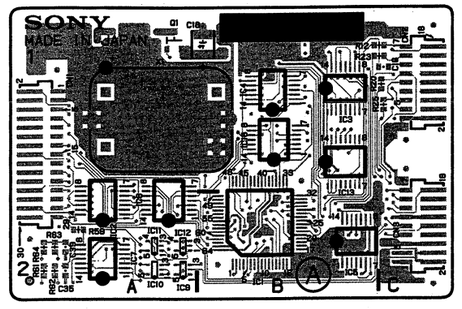

TG-206/206P -A SIDE-
SUFFIX:-11

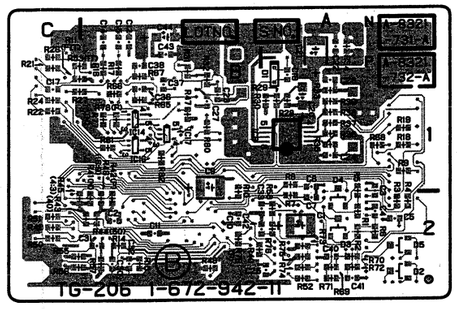

TG-206/206P -B SIDE-
SUFFIX:-11

DVW-707 (J) : S/N 30001 through 30005
DVW-707 (SY) : S/N 10001 through 10020
DVW-707P : S/N 40001 through 40035

TG-206/206P (1-672-942-11)
---

*:B SIDE

C1	*A2	CN2	C1	R14	*B2	R56	*C2
C2	*B2	CN3	C2	R15	*B2	R57	*B2
C3	*A1			R16	*B1	R58	*A2
C4	*A2	D1	*A1	R17	*B1	R59	A2
C5	*A2	D2	*A2	R18	*A1	R61	A2
C7	*A2	D3	*A2	R19	*A1	R62	A2
C8	*A1	D4	*A2	R20	C1	R63	A2
C9	*B1	D5	*A2	R21	*C1	R64	A2
C10	*B2			R22	*C1	R65	*B1
C11	*B2	IC1	B2	R23	C1	R66	*B1
C12	*B1	IC2	A2	R24	*C1	R67	*B1
C14	*B1	IC3	B1	R25	C1	R68	*A1
C15	*B1	IC4	B1	R26	*C1	R69	*A2
C16	C1	IC5	B2	R27	*C1	R70	*A2
C17	*C1	IC6	A2	R28	*A1	R71	*A2
C18	B1	IC7	A2	R29	*A1	R72	*A2
C19	*A1	IC8	*A1	R30	*A1	R73	*A2
C20	*A1	IC9	A2	R31	*B1	R74	*A2
C21	*A1	IC10	A2	R32	*B1	R75	*A2
C22	*A1	IC11	A2	R33	*A1	R76	*A2
C23	*B1	IC12	A2	R34	*A1	R77	*B1
C24	*A1	IC13	B1	R35	*A1	R78	*B1
C25	*A2	IC14	*B1	R36	*A1	R79	*B2
C27	*B1	IC16	*B1	R37	*A1	R80	*B1
C28	*A1	IC17	*B1	R38	*A1	R81	*B1
C30	*B2	IC18	B1	R39	*A1	R82	*B1
C31	*B2			R40	*B2		
C32	*B2	Q1	A1	R41	*B2	X1	A1
C33	*A2			R42	*B2		
C35	A2	R1	*A2	R43	*B2		
C36	*B1	R2	*A2	R44	*B2		
C37	*B1	R3	*A2	R45	*C2		
C38	*B1	R4	*A2	R46	*B2		
C39	A2	R5	*A1	R47	*B1		
C40	*A2	R6	*A2	R48	*B2		
C41	*A2	R7	*A2	R49	*C2		
C42	*A2	R8	*A1	R50	*C2		
C43	*B1	R9	*A1	R51	*C2		
C44	*B1	R10	*B1	R52	*A2		
		R11	*C1	R53	*C1		
CN1	A1	R12	C1	R55	*C2		

Y-SP1386 / DRUCK 165

BI-96 (1-662-321-11)
---

*:B SIDE

C1	B3	Q1	B2
C2	A1	Q2	D3
C3	B2	Q3	A3
C5	A3	Q4	A3
C6	A3		
C7	C3	R1	A3
C8	C2	R2	B2
C9	C3	R3	A1
C10	C3	R4	B3
C11	D3	R5	B3
C12	B2	R6	B3
C13	D2	R7	B2
C14	C2	R8	B2
C16	C3	R9	B2
		R10	C3
CN3	*D3	R11	D3
		R12	D3
D1	B2	R13	D3
D2	B2	R14	D3
D3	A1	R15	D3
D4	B3	R16	D2
D5	C2	R17	A3
		R31	B3
IC1	D2		
IC2	*A1		
IC3	*C2		
IC4	*B1		

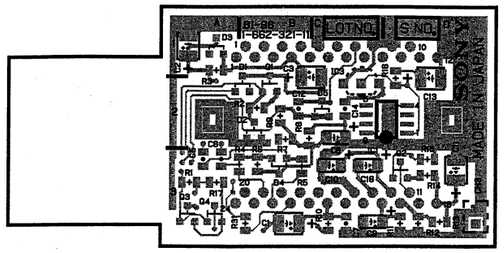

BI-96 -A SIDE-
SUFFIX:-11

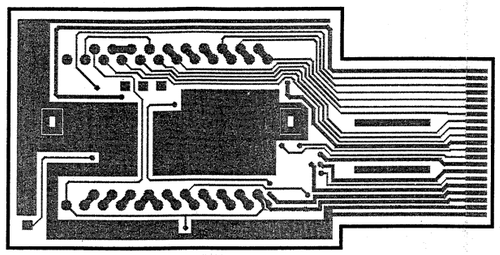

BI-96 -B SIDE-
SUFFIX:-11

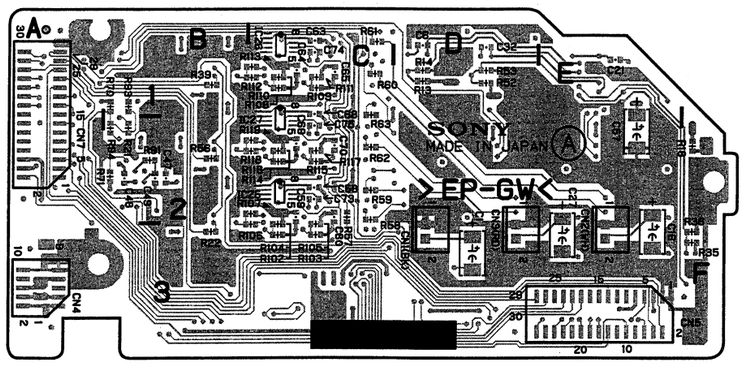

PA-228 -A SIDE-
SUFFIX:-11

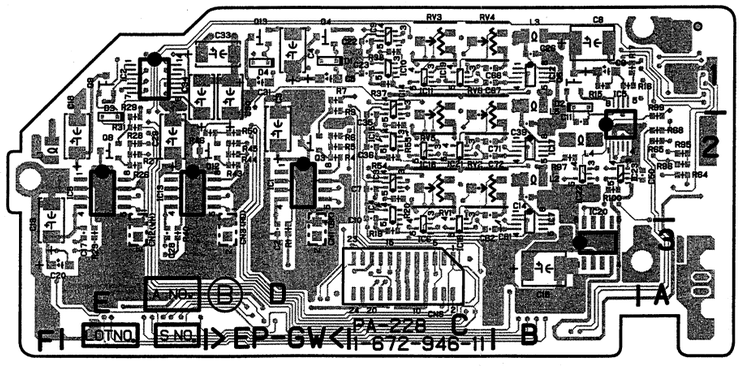

PA-228 -B SIDE-
SUFFIX:-11

PA-228 (1-672-946-11)
---

*:B SIDE

C1	D3	C21	E1	C50	*A2	C74	C1	IC3	*C2	IC21	*C2
C2	*D3	C22	*C1	C57	E2	C75	C2	IC4	*C2	IC22	*B2
C3	*D2	C23	*C1	C58	C2			IC5	*B2	IC23	*B2
C4	*D1	C26	*B1	C59	C2	CN1	D3	IC6	*C3	IC25	C2
C5	*D1	C27	E3	C60	C2	CN2	E3	IC7	*B3	IC26	C1
C6	D1	C28	*E3	C61	*C2	CN3	D3	IC8	*E2	IC27	C2
C7	*C2	C29	*E2	C62	*C3	CN4	A3	IC9	*C1		
C8	*B1	C30	*D1	C63	C1	CN5	E3	IC10	*C1	L1	*F2
C9	*B1	C31	*D1	C64	C1	CN6	*C3	IC11	*C1	L2	*B2
C10	*C2	C32	D1	C65	C1	CN7	A1	IC12	*B1	L3	*B1
C11	*B2	C33	*D1	C66	*C1			IC13	*E2	L4	*B2
C14	*B2	C34	*E1	C67	*C1	D1	*D1	IC14	*C1	L5	*B1
C15	*B3	C35	*C2	C68	C1	D2	*B1	IC15	*C2		
C16	E3	C36	*C2	C69	C2	D3	*E2	IC16	*C2	Q3	*D2
C17	*E3	C39	*B2	C70	C2	D4	*D1	IC17	*B2	Q4	*D1
C18	*E2	C47	B2	C71	*C2			IC18	*C3	Q5	*B1
C19	*F2	C48	B2	C72	*C2	IC1	*D2	IC19	*C1	Q8	*E2
C20	*F3	C49	B2	C73	C2	IC2	*E1	IC20	*B3	Q9	*E1

Q12	*D2	R22	B3	R52	D1	R93	B1	R113	C1
Q13	*D1	R23	*E3	R53	D1	R94	B2	R114	C2
		R26	*E2	R54	*C2	R95	*A2	R115	C2
R1	*D3	R27	*E2	R55	*C2	R96	*A2	R116	C2
R4	*D2	R28	*E2	R56	B2	R97	*B2	R117	C2
R5	*D2	R29	*E2	R57	C2	R99	*A2	R118	C2
R6	*D2	R31	*E2	R58	C2	R100	*B2	R119	C2
R7	*D1	R35	F3	R59	C2	R102	C3		
R9	*D1	R36	F3	R60	C1	R103	C3	RV1	*C2
R13	D1	R37	*C1	R61	C1	R104	C3	RV2	*C2
R14	D1	R38	*C1	R62	C2	R105	C3	RV3	*C1
R15	*B1	R39	B1	R63	C1	R106	C3	RV4	*C1
R16	*B1	R40	*E3	R64	*A2	R107	C2	RV5	*C2
R17	*B1	R43	*D2	R65	*A2	R108	C1	RV6	*C2
R18	F2	R44	*D2	R68	*A2	R109	C1		
R19	*C3	R45	*D2	R70	B1	R110	C1		
R20	*C2	R46	*D2	R71	B2	R111	C1		
R21	B2	R50	*D2	R91	B2	R112	C1		

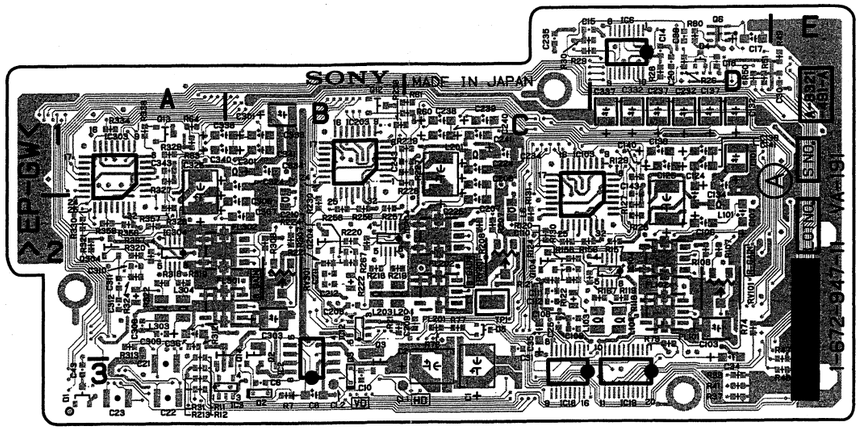

VA-191 -A SIDE-
SUFFIX:-11

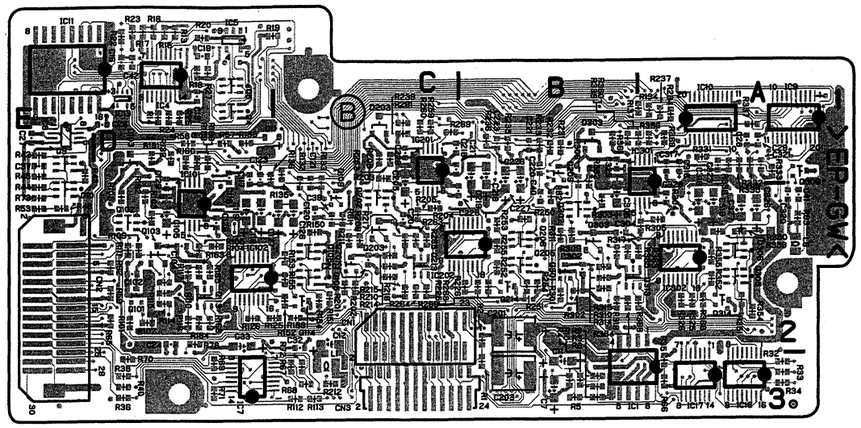

VA-191 -B SIDE-
SUFFIX:-11

VA-191 (1-672-947-11)

*:B SIDE

C1	C3	C102	*D2	C209	C2	C318	*A2	FL301	A2	L201	C1
C2	C3	C103	D2	C210	B2	C319	*A2	FL302	A2	L203	B2
C6	B3	C104	*D2	C211	B2	C320	*A2			L204	B2
C7	*B3	C105	*D2	C212	B2	C321	*A1	IC1	*A2	L301	B1
C8	B3	C106	D2	C216	*C1	C323	*A1	IC2	B3	L303	A2
C10	B3	C107	D2	C217	*C1	C324	B1	IC3	B3	L304	A2
C11	*B3	C108	C2	C218	*B1	C325	A1	IC4	*D1		
C12	*C2	C109	C2	C219	*B1	C326	*A2	IC5	*D1	Q2	B2
C13	*D1	C110	C2	C220	*B1	C327	*A2	IC6	D1	Q3	B3
C14	D1	C111	C2	C221	*B1	C328	*A2	IC7	*C3	Q4	*D1
C15	C1	C112	C2	C223	*B1	C329	*B1	IC8	*E1	Q5	*D1
C16	*D1	C116	*D1	C224	C1	C332	D1	IC9	*A1	Q6	D1
C17	D1	C117	*D1	C225	C1	C334	B1	IC10	*A1	Q9	*E1
C18	D1	C118	*D2	C226	*B1	C337	D1	IC11	*D1	Q10	*E2
C19	*D1	C119	*D2	C227	*B1	C338	A1	IC12	B2	Q11	*D1
C20	D1	C120	*C2	C228	*B2	C339	B1	IC13	*D1	Q12	B1
C21	A3	C121	*C1	C229	*C1	C340	A1	IC16	*A3	Q13	A1
C22	A3	C123	*D1	C232	D1	C341	B1	IC17	*A3	Q14	A2
C23	A3	C124	D2	C234	C1	C343	A1	IC18	C2	Q101	*D2
C24	*D2	C125	D2	C235	C1			IC19	D2	Q102	*D2
C25	C2	C126	*C2	C237	D1	CL1	B3	IC101	*D1	Q103	*D2
C26	*D1	C127	*C2	C238	C1	CL2	B3	IC102	*D2	Q104	C2
C27	*E1	C128	*D2	C239	C1			IC103	C2	Q105	*C2
C28	*A1	C129	*D1	C240	C1	CN1	*C2	IC104	D2	Q106	*C2
C29	*A1	C132	D1	C241	C1	CN2	*E2	IC201	*C1	Q109	*C2
C30	E1	C134	D1	C243	C1	CN3	*C3	IC202	*B2	Q113	*D2
C31	C2	C137	D1	C301	B1			IC203	B1	Q114	*C2
C32	*C2	C138	D1	C302	*B2	D1	A3	IC204	B2	Q201	*C2
C33	*D2	C139	D1	C303	B2	D2	B3	IC301	*A1	Q202	*C2
C34	D3	C140	D1	C304	*B2	D3	B3	IC302	*A2	Q203	*C2
C35	C2	C141	D1	C305	*B2	D4	D1	IC303	A1	Q204	B2
C36	A2	C143	D2	C306	B2	D5	C2	IC304	A2	Q205	*B2
C37	*E1	C201	*B2	C307	B2	D103	*D1			Q206	*B2
C38	D1	C202	*C2	C308	A2	D203	*C1	L1	*C3	Q209	*B1
C39	*C2	C203	*B3	C309	A2	D303	*B1	L6	C2	Q213	*C2
C40	*B2	C204	*C2	C310	A2			L7	B2	Q214	*B2
C41	*A2	C205	*C1	C311	A2	FL101	D2	L8	*A2	Q301	*B2
C42	*D1	C206	C1	C312	A2	FL102	D2	L101	D2	Q302	*B2
C43	A3	C207	C2	C316	*A1	FL201	C2	L103	D2	Q303	*B2
C101	D1	C208	B2	C317	*A1	FL202	C2	L104	D2	Q304	A2

Q305	*A2	R1	*B3	R36	*D3	R81	*C2	R139	*D1	R220	B2
Q306	*A2	R2	*B2	R37	D3	R82	*B2	R150	*C2	R221	B2
Q309	*A1	R3	*B3	R38	*D3	R83	*A2	R151	*C2	R222	B2
Q313	*B2	R4	*B3	R39	D3	R101	*D2	R152	*C2	R224	B2
Q314	*A2	R5	*B3	R40	*D3	R102	*D2	R153	*C2	R225	*B2
		R6	*B3	R41	D3	R103	*D2	R154	*C2	R226	*B2
R1	*B3	R7	B3	R42	*E1	R104	*D2	R155	*C2	R227	C1
R2	*B2	R9	*B3	R43	*E1	R105	*D2	R156	C2	R228	C1
R3	*B3	R10	*B3	R44	*E1	R106	*D2	R157	D2	R229	C1
R4	*B3	R11	A2	R45	*E1	R107	D2	R158	C2	R230	B2
R5	*B3	R12	A3	R46	*E2	R108	D2	R159	*D1	R231	*B1
R6	*B3	R13	*D1	R47	E3	R109	*D2	R160	*D1	R232	*B1
R7	B3	R14	*D1	R48	E3	R110	*D2	R161	*D1	R233	*B1
R9	*B3	R15	*D1	R49	E1	R111	*D2	R162	*D2	R234	*A1
R10	*B3	R16	*D1	R50	D1	R112	*C3	R163	*D2	R235	*B1
R11	A2	R17	*D1	R51	D1	R113	*C3	R164	*D2	R236	*B1
R12	A3	R18	*D1	R53	*E2	R114	*D2	R165	*D2	R237	*A1
R13	*D1	R19	*C1	R57	*D1	R115	*D2	R166	*D2	R238	B1
R14	*D1	R20	*C1	R58	*D1	R116	*D2	R167	C2	R239	*C1
R15	*D1	R21	B2	R59	*D2	R117	*D2	R168	*C2	R250	*B2
R16	*D1	R22	*C1	R60	C1	R118	D2	R169	*D1	R251	*B2
R17	*D1	R23	*D1	R61	C1	R119	D2	R201	*C2	R252	*B2
R18	*D1	R24	*D1	R62	*D2	R120	C2	R202	*C2	R253	*B2
R19	*C1	R25	*D1	R63	A1	R121	C2	R203	*C1	R254	*B2
R20	*D1	R26	D1	R64	A1	R122	C2	R204	*C2	R255	*B2
R21	B2	R27	*D1	R65	*D2	R124	C2	R205	*C2	R256	B2
R22	*D1	R28	D1	R66	*A3	R125	*C2	R206	*C1	R257	B2
R23	*D1	R29	C1	R67	*C3	R126	*D2	R207	C2	R258	B2
R24	*D1	R30	C1	R68	*C3	R127	D2	R208	C2	R259	*C1
R25	*D1	R31	A3	R69	*D3	R128	D2	R209	*C2	R260	*C1
R26	D1	R32	*A3	R70	*D3	R129	D1	R210	*C2	R261	*C1
R27	*D1	R33	*A3	R71	*D3	R130	C2	R211	*C2	R262	*C1
R28	D1	R34	*A3	R72	*C3	R131	C2	R212	*C3	R263	*C2
R29	C1	R35	*A3	R73	*E2	R132	*C1	R213	A3	R264	*C2
R30	C1			R74	D2	R133	*C1	R214	*C2	R265	*C2
R31	A3			R76	C2	R134	*A1	R215	*C2	R266	*C2
R32	*A3			R77	C2	R135	*C1	R216	*C2	R267	B2
R33	*A3			R78	*D2	R136	*D1	R217	*C2	R268	*B2
R34	*A3			R79	D2	R137	*A1	R218	B2	R269	*C1
R35	*A3			R80	D1	R138	*D1	R219	B2	R301	*B2

R302	*B2	R353	*A2		
R303	*B2	R354	*A2		
R304	*A2	R355	*A2		
R305	*A2	R356	A2		
R306	*B1	R357	A2		
R307	B2	R358	A2		
R308	B2	R359	*A1		
R309	*B2	R360	*A1		
R310	*B2	R361	*B1		
R311	*B2	R362	*B1		
R312	A2	R363	*B2		
R313	A2	R364	*B2		
R314	*B2	R365	*A2		
R315	*B2	R366	*A2		
R316	*B2	R367	A2		
R317	*B2	R368	*A2		
R318	A2	R369	*A1		
R319	A2				
R320	A2	RV101	D2		
R321	A2	RV201	C2		
R322	A2	RV301	B2		
R324	A2				
R325	*A2	TP1	C2		
R326	*A2				
R327	A1				
R328	A2				
R329	A1				
R330	A2				
R331	*A1				
R332	*A1				
R333	*A1				
R334	A1				
R335	*A1				
R336	*A1				
R337	*A1				
R338	A1				
R339	*B1				
R350	*A2				
R351	*A2				
R352	*A2				

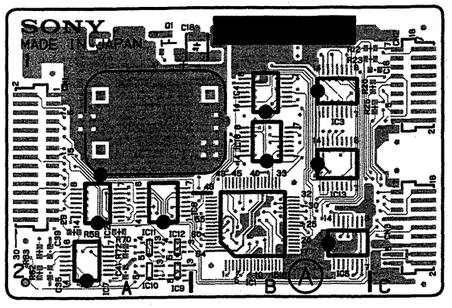

TG-206/206P -A SIDE-
SUFFIX:-12

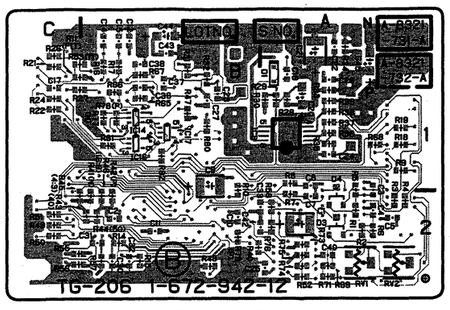

TG-206/206P -B SIDE-
SUFFIX:-12

DVW-707 (J) : S/N 30006 ahd Higher
DVW-707 (SY) : S/N 10021 and Higher
DVW-707P : S/N 40036 and Higher

TG-206/206P (1-672-942-12)

*:B SIDE

C1	*A2	CN1	A1	R14	*B2	R55	*C2
C2	*B2	CN2	C1	R15	*B2	R56	*C2
C3	*A1	CN3	C2	R16	*B1	R57	*B2
C4	*A2			R17	*B1	R58	*A2
C5	*A2	D1	*A1	R18	*A1	R59	A2
C7	*A2	D3	*A2	R19	*A1	R62	A2
C8	*A1	D4	*A2	R20	C1	R63	A2
C9	*B1			R21	*C1	R65	*B1
C10	*B2	IC1	B2	R22	*C1	R66	*B1
C11	*B2	IC2	A2	R23	C1	R67	*B1
C12	*B1	IC3	B1	R24	*C1	R68	*A1
C14	*B1	IC4	B1	R25	C1	R69	*A2
C15	*B1	IC5	B2	R26	*C1	R70	A2
C16	C1	IC6	A2	R27	*C1	R71	*A2
C17	*C1	IC7	A2	R28	*A1	R72	A2
C18	B1	IC8	*A1	R29	*A1	R73	*A2
C19	*A1	IC9	A2	R30	*A1	R74	*A2
C20	*A1	IC10	A2	R31	*B1	R75	*A2
C21	*A1	IC11	A2	R32	*B1	R76	*A2
C22	*A1	IC12	A2	R33	*A1	R77	*B1
C23	*B1	IC13	B1	R34	*A1	R78	*B1
C24	*A1	IC14	*B1	R35	*A1	R79	*B2
C25	*A2	IC16	*B1	R36	*A1	R80	*B1
C27	*B1	IC17	*B1	R37	*A1	R81	*B1
C28	*A1	IC18	B1	R38	*A1	R82	*B1
C30	*B2			R39	*A1		
C31	*B2	Q1	A1	R40	*B2	RV1	*A2
C32	*B2			R41	*B2	RV2	*A2
C33	*A2	R1	*A2	R42	*B2		
C35	A2	R2	*A2	R43	*B2	X1	A1
C36	*B1	R3	*A2	R44	*B2		
C37	*B1	R4	*A2	R45	*C2		
C38	*B1	R5	*A1	R46	*B2		
C39	A2	R6	*A2	R47	*B1		
C40	*A2	R7	*A2	R48	*B2		
C41	A2	R8	*A1	R49	*C2		
C42	*A2	R9	*A1	R50	*C2		
C43	*B1	R10	*B1	R51	*C2		
C44	*B1	R11	*C1	R52	*A2		
C45	*A1	R12	C1	R53	*C1		

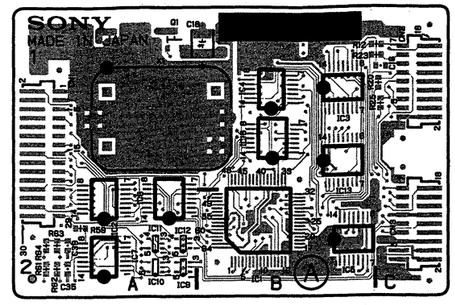

TG-206/206P -A SIDE-
SUFFIX:-11

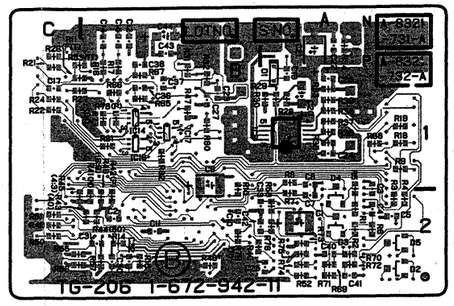

TG-206/206P -B SIDE-
SUFFIX:-11

DVW-707 (J) : S/N 30001 through 30005
DVW-707 (SY) : S/N 10001 through 10020
DVW-707P : S/N 40001 through 40035

TG-206/206P (1-672-942-11)

*:B SIDE

C1	*A2	CN2	C1	R14	*B2	R56	*C2
C2	*B2	CN3	C2	R15	*B2	R57	*B2
C3	*A1			R16	*B1	R58	*A2
C4	*A2	D1	*A1	R17	*B1	R59	A2
C5	*A2	D2	*A2	R18	*A1	R61	A2
C7	*A2	D3	*A2	R19	*A1	R62	A2
C8	*A1	D4	*A2	R20	C1	R63	A2
C9	*B1	D5	*A2	R21	*C1	R64	A2
C10	*B2			R22	*C1	R65	*B1
C11	*B2	IC1	B2	R23	C1	R66	*B1
C12	*B1	IC2	A2	R24	*C1	R67	*B1
C14	*B1	IC3	B1	R25	C1	R68	*A1
C15	*B1	IC4	B1	R26	*C1	R69	*A2
C16	C1	IC5	B2	R27	*C1	R70	*A2
C17	*C1	IC6	A2	R28	*A1	R71	*A2
C18	B1	IC7	A2	R29	*A1	R72	*A2
C19	*A1	IC8	*A1	R30	*A1	R73	*A2
C20	*A1	IC9	A2	R31	*B1	R74	*A2
C21	*A1	IC10	A2	R32	*B1	R75	*A2
C22	*A1	IC11	A2	R33	*A1	R76	*A2
C23	*B1	IC12	A2	R34	*A1	R77	*B1
C24	*A1	IC13	B1	R35	*A1	R78	*B1
C25	*A2	IC14	*B1	R36	*A1	R79	*B2
C27	*B1	IC16	*B1	R37	*A1	R80	*B1
C28	*A1	IC17	*B1	R38	*A1	R81	*B1
C30	*B2	IC18	B1	R39	*A1	R82	*B1
C31	*B2			R40	*B2		
C32	*B2	Q1	A1	R41	*B2	X1	A1
C33	*A2			R42	*B2		
C35	A2	R1	*A2	R43	*B2		
C36	*B1	R2	*A2	R44	*B2		
C37	*B1	R3	*A2	R45	*C2		
C38	*B1	R4	*A2	R46	*B2		
C39	A2	R5	*A1	R47	*B1		
C40	*A2	R6	*A2	R48	*B2		
C41	*A2	R7	*A2	R49	*C2		
C42	*A2	R8	*A1	R50	*C2		
C43	*B1	R9	*A1	R51	*C2		
C44	*B1	R10	*B1	R52	*A2		
		R11	*C1	R53	*C1		
CN1	A1	R12	C1	R55	*C2		

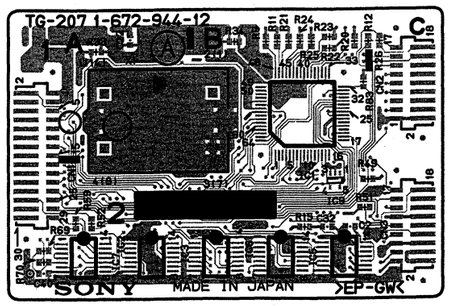

TG-207/207P -A SIDE-
SUFFIX:-12

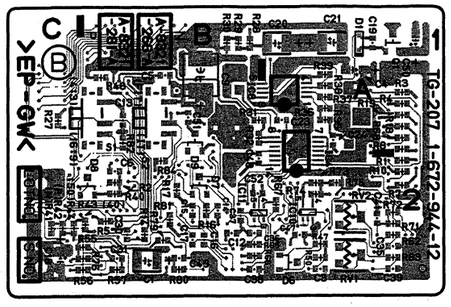

TG-207/207P -B SIDE-
SUFFIX:-12

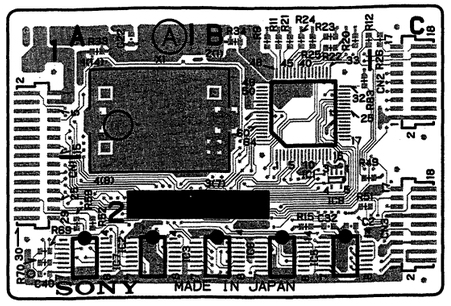

TG-207/207P -A SIDE-
SUFFIX:-11

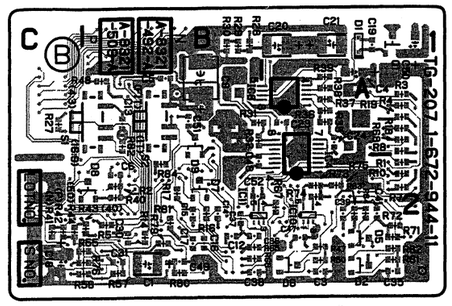

TG-207/207P -B SIDE-
SUFFIX:-11

TG-207/207P (1-672-944-12)

*:B SIDE

C1	*B2	D1	*A1	R24	B1	R73	*A2
C2	B2	D6	*A2	R25	B1	R74	*A2
C3	*A2	D7	*B2	R26	C1	R75	*A2
C4	*A1	D8	*B2	R27	*C1	R76	*B2
C5	*B1	D9	*B1	R28	*B1	R79	*B2
C6	*B2			R29	*B1	R80	*B2
C9	*B1	IC1	B1	R30	*B1	R81	*B2
C12	*B2	IC2	A2	R31	*B1	R82	*B1
C13	*B1	IC3	B2	R32	*B1	R83	B1
C14	*B2	IC4	*A2	R33	A1	R84	*B2
C15	*B2	IC5	B2	R34	B1		
C16	*B2	IC6	B2	R35	*A1	RV1	*A2
C17	*B2	IC7	A2	R36	*A1	RV2	*A2
C18	*C2	IC8	*A1	R37	*A1		
C19	*A1	IC9	B2	R38	*A1	S1	*B1
C20	*A1	IC10	*A2	R39	*A1	S2	*B1
C21	*A1	IC11	*B2	R40	*B2		
C22	A1			R41	*C2	X1	A1
C23	*A1	Q1	*A1	R42	*C2		
C24	*A1			R43	*B2		
C30	*B2	R1	*A2	R44	*C2		
C31	*B2	R2	*B2	R47	*A2		
C32	B2	R3	*A1	R48	*B1		
C35	*A2	R4	*A1	R49	B2		
C36	*B2	R5	*B2	R50	*A2		
C37	*B2	R7	*A2	R51	B2		
C38	*B2	R8	*A1	R52	A2		
C39	*A2	R9	B1	R55	*B2		
C40	A2	R10	*A2	R56	*B2		
C41	*A2	R11	B1	R57	*B2		
C47	*A2	R12	B1	R59	A2		
C48	*B2	R14	*B2	R62	*A2		
C49	*B2	R15	B2	R63	*A2		
C50	*A1	R16	*B2	R65	*B2		
C51	*B1	R17	*B2	R66	*B2		
C52	*B2	R18	*A1	R67	*A2		
		R19	*A1	R68	*A1		
CN1	A1	R20	B1	R69	A2		
CN2	C1	R21	B1	R70	A2		
CN3	C2	R22	B1	R71	*A2		
		R23	B1	R72	*A2		

TG-207/207P (1-672-944-11)

*:B SIDE

C1	*B2	D1	*A1	R21	B1	R67	*A2
C2	B2	D2	*A2	R22	B1	R68	*A1
C3	*A2	D5	*A2	R23	B1	R69	A2
C4	*A1	D6	*A2	R24	B1	R70	A2
C5	*B1	D7	*B2	R25	B1	R71	*A2
C6	*B2	D8	*B2	R26	C1	R72	*A2
C9	*B1	D9	*B1	R27	*C1	R73	*A2
C12	*B2			R28	*B1	R74	*A2
C13	*B1	IC1	B1	R29	*B1	R75	*A2
C14	*B2	IC2	A2	R30	*B1	R76	*B2
C15	*B2	IC3	B2	R31	*B1	R79	*B2
C16	*B2	IC4	*A2	R32	*B1	R80	*B2
C17	*B2	IC5	B2	R33	A1	R81	*B2
C18	*C2	IC6	B2	R34	B1	R82	*B1
C19	*A1	IC7	A2	R35	*A1	R83	B1
C20	*A1	IC8	*A1	R36	*A1	R84	*B2
C21	*A1	IC9	B2	R37	*A1		
C22	A1	IC10	*A2	R38	*A1	S1	*B1
C23	*A1	IC11	*B2	R39	*A1	S2	*B1
C24	*A1			R40	*B2		
C30	*B2	Q1	*A1	R41	*C2	X1	A1
C31	*B2			R42	*C2		
C32	B2	R1	*A2	R43	*B2		
C35	*A2	R2	*B2	R44	*C2		
C36	*B2	R3	*A1	R47	*A2		
C37	*B2	R4	*A1	R48	*B1		
C38	*B2	R5	*B2	R49	B2		
C39	*A2	R7	*A2	R50	*A2		
C40	A2	R8	*A1	R51	B2		
C41	*A2	R9	B1	R52	A2		
C47	*A2	R10	*A2	R55	*B2		
C48	*B2	R11	B1	R56	*B2		
C49	*B2	R12	B1	R57	*B2		
C50	*A1	R14	*B2	R59	A2		
C51	*B1	R15	B2	R61	*A2		
C52	*B2	R16	*B2	R62	*A2		
		R17	*B2	R63	*A2		
CN1	A1	R18	*A1	R64	*A2		
CN2	C1	R19	*A1	R65	*B2		
CN3	C2	R20	B1	R66	*B2		

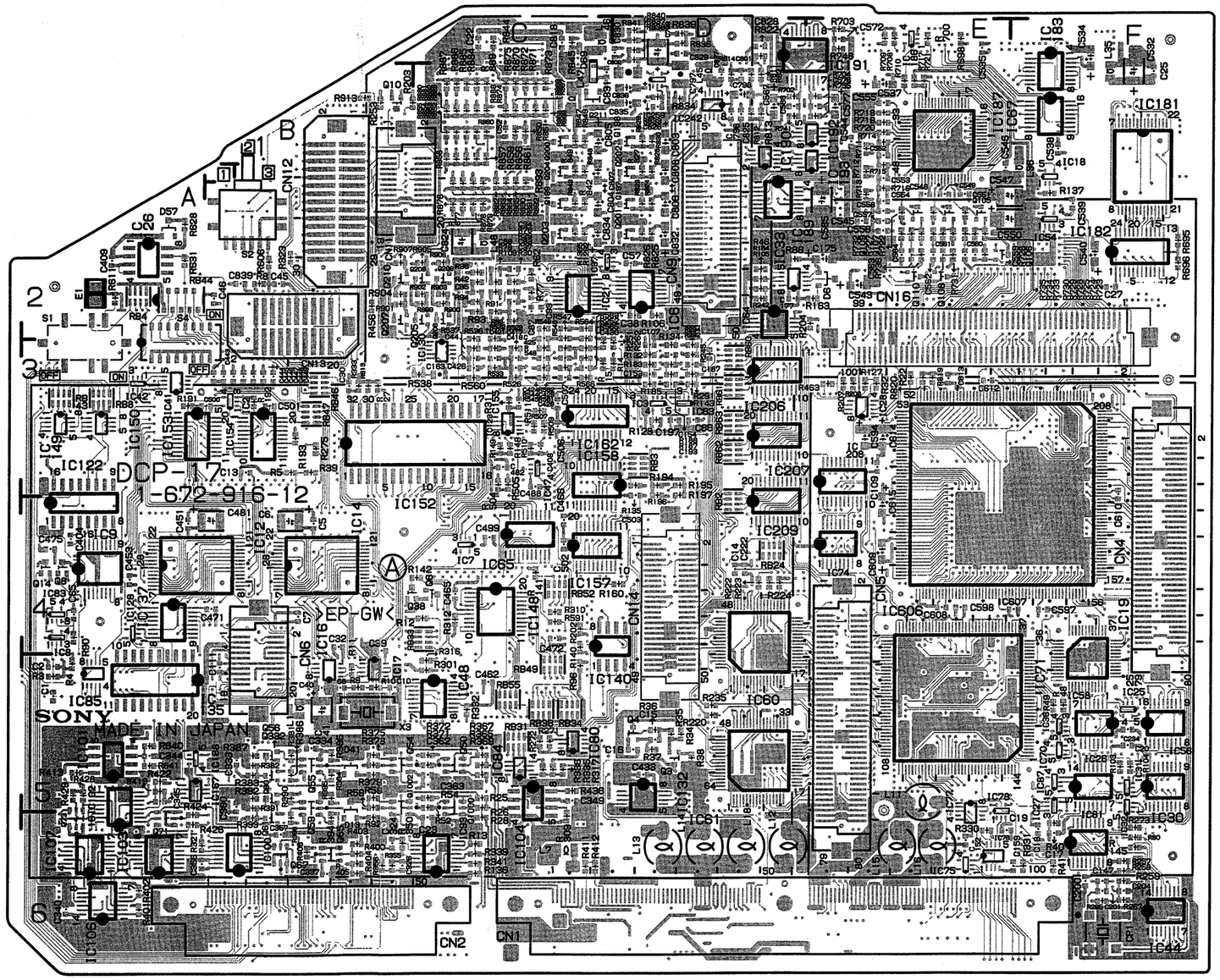

Components locations list ; previous page

DCP-17 -A SIDE-
SUFFIX:-12

DCP-17 (1-672-916-12)
---

*:B SIDE

C1	A5	C115	*E6	C327	*C6	C502	C4	C807	C1	IC8	A4	IC102	A6	L14	D6	R11	B5	R101	*C4	R204	E2	R306	*B6
C2	A5	C116	*D6	C328	*C5	C503	D3	C808	D1	IC9	A4	IC103	A6	L15	E6	R12	C4	R102	*D5	R205	*D2	R308	*E5
C4	*A4	C117	*D3	C329	*B5	C504	*D1	C809	*C1	IC12	A4	IC104	C5	L16	E6	R13	C6	R103	F5	R206	*D2	R309	C6
C5	B4	C118	*D3	C330	*C5	C506	C3	C810	*D2	IC13	*C1	IC105	*B5	L18	D6	R14	D3	R104	F5	R207	E3	R310	C4
C6	B4	C123	*D5	C331	*B5	C507	C3	C811	*D1	IC14	B4	IC106	A6	L22	*B5	R15	C3	R105	D2	R208	E3	R311	C3
C7	B4	C124	*B1	C332	*B5	C508	*A6	C812	*C2	IC15	*B5	IC107	A6	L23	*B5	R16	*F5	R106	D2	R209	*E4	R312	C4
C8	B5	C132	*D2	C333	B5	C509	*A6	C813	*D1	IC16	B5	IC108	*A6	L31	*A4	R17	*F5	R107	*D2	R210	*E4	R313	*D3
C9	*A3	C133	*D2	C334	B5	C510	*B6	C814	*C1	IC17	B5	IC122	A4	L34	*A4	R18	*F5	R108	*B6	R211	*A3	R316	C5
C10	B5	C135	*C2	C335	*B5	C511	*A5	C815	*C1	IC18	F1	IC123	C3	L35	F1	R19	*F4	R109	C2	R212	*A4	R317	C5
C11	*F4	C136	*D2	C336	*B5	C532	F1	C816	*C2	IC19	F5	IC126	A2	L36	F1	R20	*F4	R110	*D6	R213	*F5	R318	*A5
C12	*F5	C147	F6	C337	B6	C534	F1	C817	*C1	IC20	*C2	IC128	A4	L45	D1	R21	*F3	R111	*C2	R214	*F5	R319	*A5
C13	B3	C152	E6	C338	*B6	C535	E1	C818	C1	IC21	C2	IC129	*C3	L46	C1	R22	E3	R112	*D4	R215	*F5	R320	*B5
C14	D4	C153	D3	C340	A6	C536	*E1	C819	*C2	IC22	*D2	IC130	C3	L47	C1	R23	*E3	R113	*D4	R216	*F5	R321	A6
C15	D5	C154	D3	C341	*A5	C537	E1	C821	*B2	IC23	*C4	IC131	*C3	L48	C2	R24	*C6	R114	*D4	R217	*D4	R322	*A6
C16	D5	C155	C3	C342	*A5	C538	F1	C822	*C1	IC24	*E4	IC132	D5			R25	C5	R115	*D4	R218	*D5	R323	B2
C17	F6	C156	*E6	C343	*A5	C539	F2	C823	*C2	IC25	F5	IC133	*D4	Q1	*B5	R26	C5	R116	*F4	R219	*D4	R325	*E5
C18	F6	C157	*E6	C344	A5	C540	F2	C824	C2	IC26	F5	IC134	*B3	Q2	*B5	R27	B3	R117	*D1	R220	D5	R326	*E5
C19	F6	C158	*E5	C345	A5	C541	*E2	C825	D1	IC27	F5	IC135	A5	Q3	D5	R28	C6	R118	*F6	R221	*D5	R327	*E6
C20	F5	C159	F6	C346	*A6	C542	*E2	C826	D1	IC28	E3	IC137	A4	Q4	D5	R29	C2	R119	*E5	R222	D4	R328	*E6
C21	*C6	C160	*E5	C347	*C5	C543	E2	C827	*C2	IC29	*F6	IC140	C5	Q5	*D5	R30	C2	R120	*E6	R223	D4	R329	*E6
C22	C1	C161	*A5	C348	*C6	C544	E1	C828	D1	IC30	F5	IC148	C4	Q6	C4	R31	*C5	R121	*E6	R224	D4	R330	E6
C23	C6	C162	*A5	C349	C5	C545	E2	C829	D1	IC31	F5	IC149	A3	Q7	*D2	R32	E3	R122	*B6	R225	*D4	R331	F6
C24	*F5	C163	C3	C354	*C6	C546	E1	C830	D1	IC32	F5	IC150	A3	Q8	A4	R33	*E4	R123	*B6	R226	*D4	R332	C5
C25	F1	C175	E2	C355	*C6	C547	F2	C831	C1	IC33	D2	IC152	B3	Q9	*A3	R34	D5	R124	*D6	R227	*D4	R333	B3
C26	*F2	C177	D2	C356	A6	C548	E2	C832	D2	IC34	*D6	IC153	A3	Q10	B1	R35	D5	R125	*D6	R228	*D4	R334	*B6
C27	F2	C178	*C6	C357	B6	C549	E2	C834	C2	IC35	*D6	IC154	B3	Q11	*A4	R36	D5	R126	*C3	R229	*D4	R335	C5
C28	*A4	C180	*D6	C358	*A6	C550	F2	C835	D1	IC36	F5	IC157	C4	Q12	*A3	R37	D5	R127	E3	R230	*D4	R336	C5
C29	*B2	C181	*D6	C359	*A6	C551	E2	C836	D1	IC37	C2	IC158	D3	Q14	A4	R38	D5	R128	D3	R231	*D4	R337	*B6
C30	B3	C182	*D6	C360	B5	C552	E1	C837	D1	IC38	*A4	IC161	*D3	Q23	*D6	R39	B3	R129	*D3	R232	*D5	R338	*B6
C31	*B5	C183	*E6	C362	C5	C553	E1	C838	*D2	IC39	*F5	IC162	C3	Q24	*C6	R40	F6	R130	*D3	R233	*D5	R339	C6
C32	B4	C184	*D6	C363	C5	C554	E2	C839	B2	IC40	*D5	IC163	*C3	Q25	*C6	R41	F6	R131	*D3	R234	*D5	R341	C6
C33	*D2	C185	*E6	C365	*B6	C555	E1	C840	*D5	IC41	A3	IC164	*A6	Q38	C4	R42	C2	R132	D3	R235	D5	R350	B6
C34	C2	C187	D3	C403	*A4	C556	E2			IC42	A3	IC165	*B6	Q47	*B6	R43	*F6	R133	*D2	R236	*D5	R351	*C6
C35	*C2	C188	*D6	C404	A4	C557	E2	CL1	*B4	IC43	*D3	IC166	*A5	Q48	*B6	R44	*F6	R134	D3	R237	*D5	R352	*C6
C36	*C2	C189	*D6	C407	*A4	C558	E2	CL2	*D2	IC44	F6	IC167	A5	Q50	C5	R45	*F5	R135	D3	R238	*D5	R353	*B6
C37	C2	C190	*C6	C408	C3	C559	E2	CL3	*D2	IC45	*F6	IC168	A5	Q53	*C5	R46	D2	R136	C6	R239	*D5	R354	*C6
C38	D2	C191	*D6	C409	A2	C560	E2	CL4	*D3	IC46	*F6	IC181	F1	Q54	B5	R47	*E4	R137	F2	R240	*D5	R355	B6
C39	B4	C193	D3	C410	*A2	C561	E2	CL7	*A3	IC47	C3	IC182	F2	Q55	B5	R48	F5	R138	*D1	R241	*D5	R356	B6
C40	B5	C194	*D6	C411	*A4	C562	E2	CL8	*A3	IC48	C5	IC183	F1	Q56	B5	R49	F5	R139	*B6	R242	D2	R357	*B6
C41	B5	C195	*D6	C416	C3	C563	E2	CL9	*A4	IC49	*F5	IC185	*E1	Q59	B5	R50	*F5	R140	C4	R243	*D5	R358	*B6
C42	*A4	C196	*C6	C417	C3	C564	E2	CL10	*A3	IC50	*E5	IC186	E1	Q60	B5	R51	*C5	R141	C4	R244	*D5	R359	*B6
C43	*A4	C197	D3	C420	*C3	C565	E2	CL11	*A3	IC51	*E5	IC187	E1	Q61	B6	R52	C5	R142	C4	R245	D3	R360	*B6
C44	C3	C199	*F6	C421	C3	C566	D1	CL12	*A4	IC52	*E6	IC189	D2	Q63	*A5	R53	*C6	R143	D3	R246	*D3	R361	*B6
C45	B2	C200	F6	C423	C3	C567	D1			IC53	*E4	IC190	D1	Q64	*A5	R54	C5	R144	*F6	R248	*E6	R365	C5
C46	A2	C201	F6	C424	C3	C568	*D3	CN1	D6	IC54	F2	IC191	D1	Q65	B6	R55	*C5	R145	F6	R249	*E6	R367	C5
C47	*A3	C202	*F6	C425	C2	C569	*D1	CN2	B6	IC55	*E4	IC192	E1	Q66	*B6	R56	*B5	R146	*E4	R250	*C6	R368	*C5
C48	*F6	C203	*F6	C426	C3	C570	*E1	CN4	F4	IC56	F5	IC193	E1	Q67	B6	R57	*B6	R147	*E5	R251	C3	R369	C5
C49	*D5	C204	F6	C429	C3	C571	*D1	CN5	E5	IC57	*F5	IC203	*D4	Q68	*A5	R58	B5	R148	C3	R252	C3	R370	*C5
C50	*D5	C205	*E4	C430	C3	C572	E1	CN6	B5	IC58	F5	IC204	*D4	Q69	*A5	R59	B5	R149	C3	R253	B1	R371	C5
C51	*C1	C206	*E4	C432	*D5	C573	*E1	CN9	D2	IC59	*F5	IC205	*F4	Q71	A6	R60	*C1	R150	*E4	R254	*D5	R372	C5
C52	C1	C219	*E5	C433	D5	C575	*D1	CN11	B1	IC60	D4	IC206	D3	Q73	A6	R61	*B1	R151	*E4	R255	*D5	R373	*C5
C53	*B6	C221	*D4	C434	*D5	C576	E1	CN12	B2	IC61	D5	IC207	D3	Q75	*A5	R62	C2	R152	*E4	R256	*C3	R374	*C5
C54	*D5	C222	D4	C435	*D5	C577	E1	CN13	B2	IC62	*E4	IC208	E4	Q91	*C3	R63	*B2	R153	*E4	R257	F6	R375	B5
C55	*C6	C228	*F5	C437	*A2	C579	*E1	CN14	D4	IC63	D3	IC209	D4	Q92	*B6	R64	*C2	R154	*F5	R258	F6	R376	*B5
C56	*B5	C229	*F5	C438	*B2	C591	*F3	CN16	E2	IC64	D2	IC242	D1	Q105	E2	R65	*C1	R155	*F4	R259	F6	R377	*B5
C57	D2	C230	*F5	C441	*B2	C592	*F3			IC65	C4	IC243	*D1	Q106	E2	R66	*F1	R156	*E5	R260	*F6	R378	B5
C58	*E6	C231	*F5	C443	A3	C593	*F3	CP1	F6	IC66	*B1	IC244	*D1	Q107	E2	R67	*F1	R157	*F5	R261	*F6	R379	B5
C59	*D2	C232	*F5	C444	A3	C594	E3			IC67	F1	IC245	*D1	Q108	E2	R68	*F1	R158	*F5	R262	D3	R380	*B5
C60	*D2	C233	*F5	C445	B3	C595	*F4	D2	*F5	IC68	*D5	IC248	*D2	Q109	E2	R69	*F5	R159	*F5	R263	*D6	R381	B5
C61	*D2	C234	F5	C446	B3	C596	*F4	D3	*F5	IC69	*F5	IC249	*D1	Q110	E2	R70	*E6	R160	D4	R264	*D4	R382	B5
C62	*D2	C237	*D4	C447	B3	C597	F4	D4	*F5	IC70	F5	IC250	*C2	Q197	D2	R71	*E6	R163	E2	R265	*D4	R383	B5
C63	*F6	C238	*D4	C448	B3	C598	E4	D5	*D6	IC71	E5	IC251	*C1	Q198	D1	R72	*D5	R164	D2	R267	F6	R384	B5
C64	*F6	C239	*D5	C449	B3	C599	*E4	D6	E2	IC72	*C4	IC252	*C1	Q199	C2	R73	*D6	R166	*D6	R271	C5	R385	B5
C65	A4	C240	*D5	C450	*A2	C600	*E4	D7	*C6	IC73	*E5	IC253	*C1	Q200	C1	R74	*A4	R168	*D6	R272	C5	R386	B5
C66	D3	C241	*D5	C451	A4	C601	*E4	D8	*D6	IC74	E4	IC254	*C1	Q201	D2	R75	*C6	R169	*D6	R273	F6	R387	B5
C67	*C3	C247	*D4	C453	A4	C602	*D3	D9	*D6	IC75	E6	IC255	*C2	Q202	D1	R76	C2	R170	*D6	R275	B3	R389	*B6
C78	*C2	C248	*D4	C462	C5	C603	*D3	D10	*C6	IC76	E6	IC256	*B2	Q203	C2	R77	C2	R173	*D6	R276	*D5	R390	B5
C79	*C2	C249	*D4	C465	C4	C604	*E3	D11	*F5	IC77	E6	IC258	*D1	Q204	C1	R78	C2	R175	*C6	R277	*D5	R391	B5
C80	*E6	C259	*D4	C466	C4	C605	*D3	D13	B5	IC78	E6	IC259	D1	Q205	C2	R79	*D2	R176	*C6	R278	*A3	R392	B5
C81	*D5	C260	*D5	C467	*F4	C607	F4	D14	*C3	IC79	*E3	IC260	*D1	Q206	C2	R80	F6	R177	*D6	R279	*A3	R393	B6
C82	*D6	C261	*D5	C471	A4	C608	E4	D15	*D4	IC80	C5	IC261	*D1	Q207	B2	R81	*F6	R178	*D6	R280	*A3	R394	B6
C83	C2	C262	*D5	C472	C4	C609	E4	D16	*D5	IC81	F6	IC262	*B2	Q208	C2	R82	*F6	R179	*C6	R281	*A3	R395	B5
C84	*D5	C263	*D5	C473	*D5	C610	F3	D40	*B6	IC82	*C6	IC263	*D5	Q209	C2	R83	*A4	R183	D3	R282	*C3	R396	B6
C85	C2	C264	*D5	C475	A4	C611	*F3	D41	B5	IC83	A4	IC606	E3	Q210	B2	R84	*D2	R185	D3	R283	*B6	R398	*B5
C86	*D6	C265	*D5	C476	*A5	C612	E3	D51	*A3	IC84	C5			Q211	C1	R85	*D2	R187	D3	R287	*C2	R399	*A5
C87	C2	C267	*D5	C477	*A5	C613	E3	D55	*A5	IC85	A5	IS10	*A4	Q332	B5	R86	D2	R188	D3	R288	*D2	R400	B6
C88	C2	C268	*D5	C478	*A3	C614	E3	D56	*A5	IC86	*D3	IS11	*B4	Q1000	C5	R87	*A4	R190	*E6	R289	*D1	R401	A6
C93	C2	C269	*D5	C479	*A3	C615	E4	D57	A2	IC87	F5			Q1001	*C5	R88	C2	R191	A3	R291	D3	R402	A6
C99	*F6	C295	*F6	C480	*A2	C616	*E3	D69	C1	IC88	*F5	L1	B5	Q1002	B5	R89	*A4	R192	B3	R292	D3	R403	B6
C100	*F6	C300	*B5	C481	A4	C793	*C1			IC89	*F5	L2	*B2			R90	A4	R193	B3	R293	*D3	R404	B6
C102	*E4	C301	*B5	C482	C3	C796	D1	E1	A2	IC90	*A5	L3	*A4	R1	*A5	R91	C2	R194	D3	R294	D3	R405	B6
C103	*E5	C315	*B1	C483	*C3	C797	D1	E2	*D3	IC91	*D3	L4	*D6	R2	*A5	R92	B6	R195	D3	R295	F6	R406	B6
C105	*E5	C316	*C5	C484	*B3	C798	D1			IC92	*D1	L5	*F6	R3	A5	R93	C2	R196	D3	R297	*F5	R407	*B6
C106	*D3	C317	*C5	C485	*B3	C799	D1	IC1	*A5	IC93	C6	L6	*D5	R4	A5	R94	C2	R197	D3	R298	*E5	R408	*B6
C107	D3	C318	*C5	C486	*B3	C801	D1	IC2	A3	IC94	*F5	L7	C6	R5	B3	R95	*C2	R198	*B6	R300	*B5	R409	*B6
C109	E3	C319	*A6	C487	*C3	C802	D1	IC3	D3	IC95	*E5	L9	*D5	R6	*A3	R96	C5	R199	*B6	R301	C5	R410	*B6
C111	A5	C323	*C6	C488	C3	C803	D1	IC4	*C2	IC96	*B5	L10	*D5	R7	*A3	R97	*E6	R200	*C6	R302	*B5	R411	C6
C112	*E6	C324	B6	C499	C4	C804	C2	IC5	*D2	IC97	*F5	L11	E5	R8	B2	R98	C2	R201	*C6	R303	*B6	R412	C6
C113	*D6	C325	*C6	C500	A3	C805	C1	IC6	D2	IC100	B6	L12	D6	R9	B5	R99	*D2	R202	C4	R304	*E6	R413	A5
C114	*D6	C326	B6	C501	B3	C806	D2	IC7	C4	IC101	A5	L13	D6	R10	B5	R100	*E6	R203	C1	R305	*E6	R414	*A5

R415	*A5	R620	*E4	R822	D1	R912	*D2																
R416	*A5	R625	*C3	R823	D2	R913	B1																
R417	*A6	R628	A2	R824	D2	R914	*E5																
R418	*A5	R630	*E4	R825	D2	R915	*E5																
R419	A5	R631	A2	R826	D2	R916	*D5																
R420	*A5	R632	*A6	R827	D1	R917	*B2																
R421	*A6	R634	*A6	R828	D1	R918	*D5																
R422	A5	R636	*A6	R829	D1	R919	*D5																
R423	*A6	R637	*B6	R830	D1	R920	*C3																
R424	A6	R638	*B6	R831	*D1	R1261	*D1																
R425	*A6	R640	A5	R832	*D1	R1292	C2																
R426	A6	R641	A5	R833	D1	R1365	C2																
R427	*A6	R694	*B1	R834	D1																		
R428	A5	R695	F2	R835	*D2	RB1	*B2																
R429	A5	R696	F2	R836	D1	RB2	D4																
R430	*A6	R697	*E1	R837	D1	RB3	D3																
R431	*A6	R698	E1	R838	D1	RB4	A2																
R432	*A6	R700	E1	R839	D1	RB5	*B6																
R433	*A5	R701	*F1	R840	D1	RB6	*C3																
R434	*B1	R702	D1	R841	D1	RB7	*D3																
R435	*C6	R703	E1	R842	C2	RB8	A3																
R436	C5	R704	E1	R843	C2	RB15	*F5																
R437	*C5	R705	*D1	R844	C1	RB16	*E5																
R438	*C5	R706	*D1	R845	C1	RB18	*E6																
R439	*C5	R707	*E1	R846	C1	RB19	*E6																
R440	*C5	R708	E1	R847	C1	RB20	*E6																
R441	*B6	R709	E1	R848	C1	RB21	*F6																
R442	*B6	R710	E1	R849	C1	RB22	*E6																
R443	*B6	R711	E1	R850	C1	RB24	D4																
R444	*A5	R712	E1	R851	C1	RB25	*E3																
R445	*A5	R713	E2	R852	C1	RB26	*E5																
R446	*A6	R714	E1	R853	C1	RB30	*D3																
R456	B2	R715	E1	R854	C1	RB31	C5																
R461	*E3	R716	E2	R855	C1	RB32	*B6																
R462	*E3	R717	E1	R856	C1	RB33	C4																
R463	E3	R718	E1	R857	C1	RB34	C5																
R464	*A6	R719	E1	R858	C1	RB35	*B4																
R500	*B3	R720	E1	R859	C1	RB36	C5																
R501	*B3	R721	E1	R860	C1	RB43	A3																
R502	*A3	R722	E2	R861	C1	RB44	A2																
R503	*B3	R723	E2	R862	C2	RB46	B3																
R504	C3	R724	E2	R863	C2	RB47	B3																
R505	C3	R725	E2	R864	C2	RB49	C5																
R506	*A4	R726	E2	R865	C2	RB51	*A6																
R507	C3	R727	E2	R866	C1	RB52	C4																
R508	*A4	R728	E2	R867	C1	RB55	C5																
R509	C3	R729	E2	R868	C1	RB56	*E6																
R510	C3	R730	E2	R869	C1	RB57	*F2																
R511	C3	R731	E2	R870	C1	RB58	*B2																
R512	*D5	R732	E2	R871	C1	RB59	*B1																
R513	*D5	R733	E2	R872	C1	RB60	D3																
R513	C3	R734	E2	R873	C1	RB61	D3																
R529	C3	R735	E2	R874	C1	RB62	D3																
R532	C3	R736	E2	R875	C1	RB63	D3																
R533	C3	R737	*D1	R876	C2																		
R536	C2	R738	*D1	R877	C2	S1	A3																
R537	C3	R739	*D1	R878	C2	S2	B2																
R538	C3	R740	*D1	R879	C2	S4	A3																
R539	*C3	R741	D1	R880	C1																		
R542	*C3	R742	*D1	R881	C1	X1	*A2																
R543	*C3	R743	*D1	R882	C1	X2	*C3																
R544	C3	R744	*E1	R883	C1	X3	B5																
R545	C3	R745	*E1	R884	C1																		
R546	C2	R746	*E1	R885	C1																		
R547	C2	R747	*E1	R886	C1																		
R548	C3	R748	E1	R887	C1																		
R549	C2	R749	*E1	R888	C1																		
R550	C3	R750	*E1	R889	C1																		
R561	C3	R751	*E1	R890	C2																		
R562	C3	R752	*E1	R891	C2																		
R563	C2	R753	*E1	R892	C2																		
R564	C2	R754	*E1	R893	C2																		
R565	C3	R755	E1	R894	*B2																		
R566	C3	R756	*E1	R895	*B2																		
R567	*D5	R757	*E1	R896	*B2																		
R568	*D6	R800	*F4	R897	*C2																		
R569	*D5	R801	*F4	R898	*C2																		
R570	*D5	R802	*D1	R899	C2																		
R571	*D5	R809	*D3	R900	C2																		
R572	*D5	R810	*D1	R901	B2																		
R591	C4	R811	D1	R902	C2																		
R606	B2	R812	D1	R903	C2																		
R607	*A5	R813	D1	R904	B2																		
R608	*A5	R814	D1	R905	C2																		
R609	*A5	R815	*F3	R906	C2																		
R610	*A5	R816	*F3	R907	B2																		
R611	A2	R817	*F3	R908	*B2																		
R613	B3	R819	E3	R909	*B2																		
R617	*E4	R820	E3	R910	*B2																		
R619	*E4	R821	D1	R911	*D5																		

CN-1183 (1-662-322-11)
---

*:B SIDE

C1	A3
C2	A3
C3	*A4
C4	*A3
C5	*A7
C6	*A6
C7	*A6
C8	*A4
CN1	A4
CN2	A2
CN3	A5
CN4	A7
D1	*A3
D2	*A2
D3	*A4
D4	*A4
D5	*A7
D6	*A7
IC1	*A4
IC2	*A5
R2	*A7
R3	*A6
R4	*A7
R6	*A4
R8	*A5
R10	*A2
R12	*A2
R13	*A6
R14	*A4
R15	*A1
R16	*A5
R17	*A5
R18	*A5
R19	*A6
R20	*A6
R21	*A6
R22	*A5
R23	*A5
R24	*A5
R25	*A5
R26	*A6
R27	*A6
R28	*A3
R29	*A3
R30	*A3
R31	*A3
R32	*A3
R33	*A4
R34	*A6
R35	*A6
R36	*A4
R37	*A6
R38	*A6
R39	*A4
S1	A6
S2	A5
S3	A4
TP1	A5

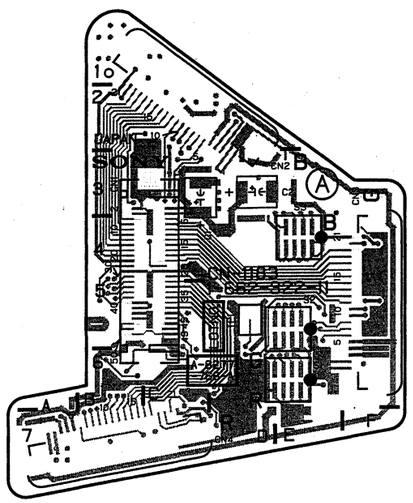

CN-1183 -A SIDE-
SUFFIX:-11

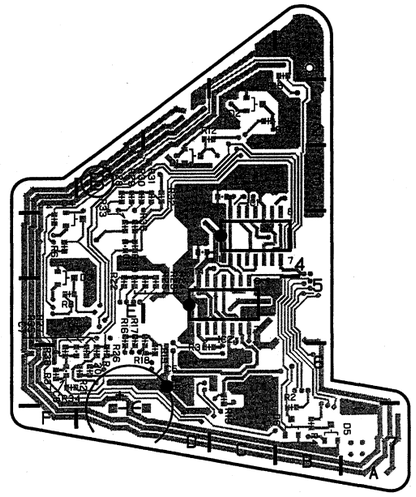

CN-1183 -B SIDE-
SUFFIX:-11

SONY-SP1386 / DRUCK 168

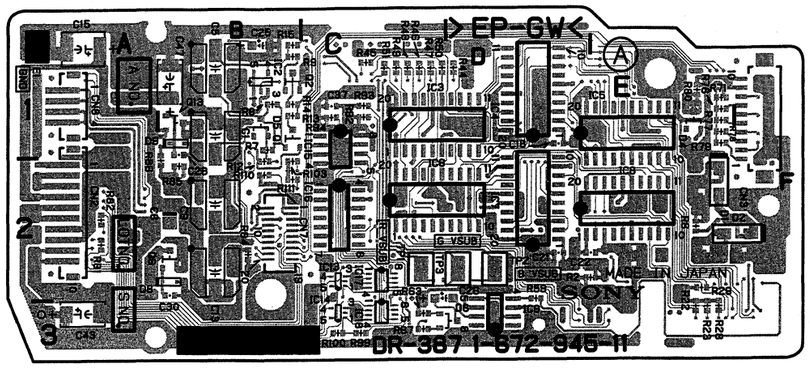

DR-387 -A SIDE-
SUFFIX:-11

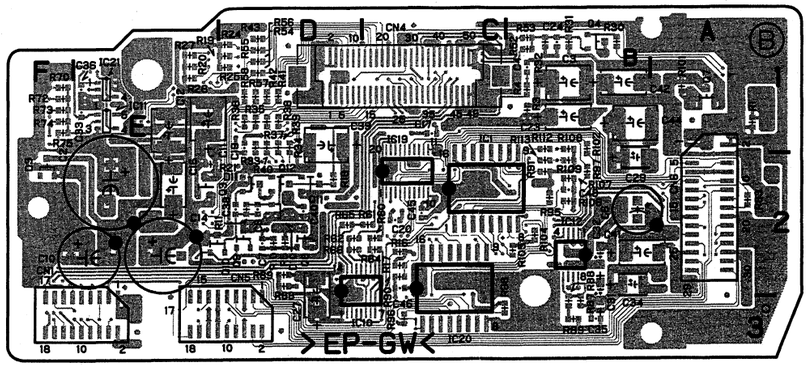

DR-387 -B SIDE-
SUFFIX:-11

DR-387 (1-672-945-11)

*:B SIDE

C1	B1	C43	A3	IC14	C3	R21	*E2	R63	C3	R105	*B2
C2	*E2	C44	*B1	IC15	C1	R22	E3	R64	*C2	R106	*B2
C3	*B1	C45	*C2	IC16	C2	R23	E3	R65	*D2	R107	*B2
C4	*B1	C46	*C2	IC17	C2	R24	*D1	R66	*D2	R108	*B1
C5	B1	C47	B1	IC18	C3	R25	*D1	R67	C3	R109	*B2
C6	*B2	C48	*B2	IC19	*C2	R26	*E1	R68	*D2	R110	B2
C7	*D2			IC20	*C3	R27	*E1	R69	*D2	R111	B2
C8	*D2	CN1	*E3	IC21	*E1	R28	E3	R70	*F1	R112	*B1
C9	B2	CN2	A2			R29	E2	R71	E1	R113	*B2
C10	*E2	CN3	F1	Q1	B1	R30	*B1	R72	*F1		
C11	*E1	CN4	*C1	Q2	B1	R31	*B1	R73	*F1	TP1	C2
C12	*E1	CN5	*D3	Q3	*E2	R32	*B1	R74	*F1	TP2	D2
C13	B2	CN6	*A2	Q4	*B1	R33	*D1	R75	*F1	TP3	D2
C14	*E2	CN7	B2	Q6	B2	R34	*D1	R76	E1		
C15	A1	CN8	A1	Q7	*A1	R35	*D1	R77	E1		
C16	*E2			Q8	*D2	R36	*D1	R78	E1		
C17	*C1	D1	E2	Q9	*D2	R37	*D1	R79	E1		
C18	D1	D2	F2	Q10	*E2	R38	*D1	R80	E1		
C19	*D1	D3	*F2	Q11	*D2	R39	*D1	R81	A2		
C20	*C2	D4	E1	Q12	*D2	R40	*D1	R82	A2		
C21	D2	D5	B1	Q13	B1	R41	*D1	R83	*A2		
C22	E2	D6	D3			R42	*D1	R84	B2		
C23	*B1	D8	B2	R1	*A1	R43	*D1	R85	B2		
C24	*B1	D9	B1	R2	E2	R44	D1	R86	B2		
C25	B1	D10	*D2	R3	*B1	R45	C1	R87	*B3		
C26	C2	D11	*D2	R4	*B1	R46	C1	R88	*B3		
C27	*D2			R5	*D2	R47	C1	R89	*B3		
C28	B1	E1	A1	R6	E2	R48	C1	R90	*C2		
C29	*B2			R7	B1	R49	C1	R91	*B2		
C30	B2	IC1	*C2	R8	B1	R50	C1	R92	C1		
C31	*B2	IC2	B1	R9	B1	R51	C1	R93	C1		
C32	*B2	IC3	C1	R10	*D2	R52	*B1	R94	C1		
C33	*E1	IC4	D1	R11	*D2	R53	*B1	R95	*B2		
C34	*B2	IC5	D2	R12	B2	R54	*D1	R96	*C3		
C35	*B3	IC6	C2	R13	B1	R55	*D1	R97	*B2		
C36	*E1	IC7	D2	R14	B1	R56	*D1	R98	*C3		
C37	C1	IC8	D2	R15	B1	R57	*D1	R99	C3		
C38	*D2	IC9	D3	R16	*C2	R58	*D1	R100	C3		
C39	*D1	IC10	*D3	R17	*C2	R59	D2	R101	*A1		
C40	*D2	IC11	*E1	R18	*D2	R60	*C2	R102	*B1		
C41	*B2	IC12	*B2	R19	*D1	R61	*C2	R103	B2		
C42	*B1	IC13	C2	R20	*E1	R62	*D2	R104	*B2		

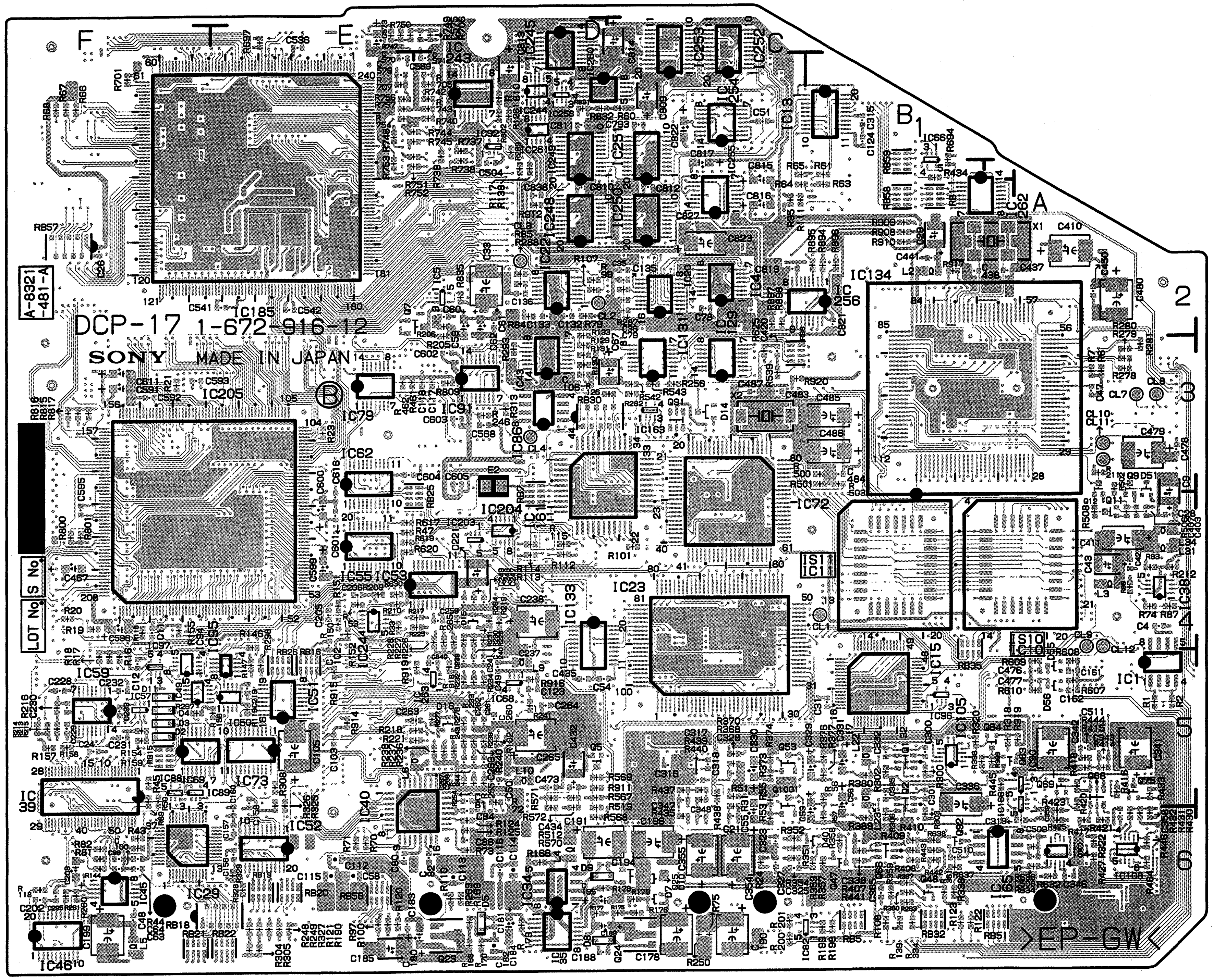

DCP-17 -B SIDE-
SUFFIX:-12

DCP-17 (1-672-916-11)
---

*:B SIDE

C1	A5	C115	*E6	C327	*C6	C502	C4	C807	C1	IC12	A4	IC104	C5	L22	*B5	R15	C3	R105	D2	R208	E3	R311	C3	R419	A5	R631	A2	R826	D2	R916	*D5
C2	A5	C116	*D6	C328	*C5	C503	D3	C808	D1	IC13	*C1	IC105	*B5	L23	*B5	R16	*F5	R106	D2	R209	*E4	R312	C4	R420	*A5	R632	*A6	R827	D1	R1261	*D1
C4	*A4	C117	*D3	C329	*B5	C504	*D1	C809	*C1	IC14	B4	IC106	A6	L31	*A4	R17	*F5	R107	*D2	R210	*E4	R313	*D3	R421	*A6	R634	*A6	R828	D1	R1292	C2
C5	B4	C118	*D3	C330	*C5	C506	C3	C810	*D2	IC15	*B5	IC107	A6	L34	*A4	R18	*F5	R108	*B6	R211	*A3	R316	C5	R422	A5	R636	*A6	R829	D1	R1365	C2
C6	B4	C123	*D5	C331	*B5	C507	C3	C811	*D1	IC16	B5	IC108	*A6	L35	F1	R19	*F4	R109	C2	R212	*A4	R317	C5	R423	*A6	R637	*B6	R830	D1		
C7	B4	C124	*B1	C332	*B5	C508	*A6	C812	*C2	IC17	B5	IC122	A4	L36	F1	R20	*F4	R110	*D6	R213	*F5	R318	*A5	R424	A6	R638	*B6	R831	*D1	RB1	*B2
C8	B5	C132	*D2	C333	B5	C509	*A6	C813	*D1	IC18	F1	IC123	C3	L45	D1	R21	*F3	R111	*C2	R214	*F5	R319	*A5	R425	*A6	R640	A5	R832	*D1	RB2	D4
C9	*A3	C133	*D2	C334	B5	C510	*B6	C814	*C1	IC19	F5	IC126	A2	L46	C1	R22	E3	R112	*D4	R215	*F5	R320	*B5	R426	A6	R641	A5	R833	D1	RB3	D3
C10	B5	C135	*C2	C335	*B5	C511	*A5	C815	*C1	IC20	*C2	IC128	A4	L47	C1	R23	*E3	R113	*D4	R216	*F5	R321	A6	R427	*A6	R694	*B2	R834	D1	RB4	A2
C11	*F4	C136	*D2	C336	*B5	C532	F1	C816	*C2	IC21	C2	IC129	*C3	L48	C2	R24	*C6	R114	*D4	R217	*D4	R322	*A6	R428	A5	R695	F2	R835	*D2	RB5	*B6
C12	*F5	C147	F6	C337	B6	C534	F1	C817	*C1	IC22	*D2	IC130	C3			R25	C5	R115	*D4	R218	*D5	R323	B2	R429	A5	R696	F2	R836	D1	RB6	*C3
C13	B3	C152	E6	C338	*B6	C535	E1	C818	C1	IC23	*C4	IC131	*C3	Q1	*B5	R26	C5	R116	*F4	R219	*D4	R325	*E5	R430	*A6	R697	*E1	R837	D1	RB7	*D3
C14	D4	C153	D3	C340	A6	C536	*E1	C819	*C2	IC24	*E4	IC132	D5	Q2	*B5	R27	B3	R117	*D1	R220	D5	R326	*E5	R431	*A6	R698	E1	R838	D1	RB8	A3
C15	D5	C154	D3	C341	*A5	C537	E1	C821	*B2	IC25	F5	IC133	*D4	Q3	D5	R28	C6	R118	*F6	R221	*D5	R327	*E6	R432	*A6	R700	E1	R839	D1	RB15	*F5
C16	D5	C155	C3	C342	*A5	C538	F1	C822	*C1	IC26	F5	IC134	*B3	Q4	D5	R29	C2	R119	*E5	R222	D4	R328	*E6	R433	*A5	R701	*F1	R840	D1	RB16	*E5
C17	F6	C156	*E6	C343	*A5	C539	F2	C823	*C2	IC27	F5	IC135	A5	Q5	*D5	R30	C2	R120	*E6	R223	D4	R329	*E6	R434	*B1	R702	D1	R841	D1	RB18	*E6
C18	F6	C157	*E6	C344	A5	C540	F2	C824	C2	IC28	E3	IC137	A4	Q6	C4	R31	*C5	R121	*E6	R224	D4	R330	E6	R435	*C6	R703	E1	R842	C2	RB19	*E6
C19	F6	C158	*E5	C345	A5	C541	*E2	C825	D1	IC29	*F6	IC140	C5	Q7	*D2	R32	E3	R122	*B6	R225	*D4	R331	F6	R436	C5	R704	E1	R843	C2	RB20	*E6
C20	F5	C159	F6	C346	*A6	C542	*E2	C826	D1	IC30	F5	IC148	C4	Q8	A4	R33	*E4	R123	*B6	R226	*D4	R332	C5	R437	*C5	R705	*D1	R844	C1	RB21	*F6
C21	*C6	C160	*E5	C347	*C5	C543	E2	C827	*C2	IC31	F5	IC149	A3	Q9	*A3	R34	D5	R124	*D6	R227	*D4	R333	B3	R438	*C5	R706	*D1	R845	C1	RB22	*E6
C22	C1	C161	*A5	C348	*C6	C544	E1	C828	D1	IC32	F5	IC150	A3	Q10	B1	R35	D5	R125	*D6	R228	*D4	R334	*B6	R439	*C5	R707	*E1	R846	C1	RB24	D4
C23	C6	C162	*A5	C349	C5	C545	E2	C829	D1	IC33	D2	IC152	B3	Q11	*A4	R36	D5	R126	*C3	R229	*D4	R335	C5	R440	*C5	R708	E1	R847	C1	RB25	*E3
C24	*F5	C163	C3	C354	*C6	C546	E1	C830	D1	IC34	*D6	IC153	A3	Q12	*A3	R37	D5	R127	E3	R230	*D4	R336	C5	R441	*B6	R709	E1	R848	C1	RB26	*E5
C25	F1	C175	E2	C355	*C6	C547	F2	C831	C1	IC35	*D6	IC154	B3	Q14	A4	R38	D5	R128	D3	R231	*D4	R337	*B6	R442	*B6	R710	E1	R849	C1	RB30	*D3
C26	*F2	C177	D2	C356	A6	C548	E2	C832	D2	IC36	F5	IC157	C4	Q23	*D6	R39	B3	R129	*D3	R232	*D5	R338	*B6	R443	*B6	R711	E1	R850	C1	RB31	C5
C27	F2	C178	*C6	C357	B6	C549	E2	C834	C2	IC37	C2	IC158	D3	Q24	*C6	R40	F6	R130	*D3	R233	*D5	R339	C6	R444	*A5	R712	E1	R851	C1	RB32	*B6
C28	*A4	C180	*D6	C358	*A6	C550	F2	C835	D1	IC38	*A4	IC161	*D3	Q25	*C6	R41	F6	R131	*D3	R234	*D5	R341	C6	R445	*A5	R713	E2	R852	C1	RB33	C4
C29	*B2	C181	*D6	C359	*A6	C551	E2	C836	D1	IC39	*F5	IC162	C3	Q38	C4	R42	C2	R132	D3	R235	D5	R350	B6	R446	*A6	R714	E1	R853	C1	RB34	C5
C30	B3	C182	*D6	C360	B5	C552	E1	C837	D1	IC40	*D5	IC163	*C3	Q47	*B6	R43	*F6	R133	*D2	R236	*D5	R351	*C6	R456	B2	R715	E1	R854	C1	RB35	*B4
C31	*B5	C183	*E6	C362	C5	C553	E1	C838	*D2	IC41	A3	IC164	*A6	Q48	*B6	R44	*F6	R134	D3	R237	*D5	R352	*C6	R461	*E3	R716	E2	R855	C1	RB36	C5
C32	B4	C184	*D6	C363	C5	C554	E2			IC42	A3	IC165	*B6	Q50	C5	R45	*F5	R135	D3	R238	*D5	R353	*B6	R462	*E3	R717	E1	R856	C1	RB43	A3
C33	*D2	C185	*E6	C365	*B6	C555	E1	CL1	*B4	IC43	*D3	IC166	*A5	Q53	*C5	R46	D2	R136	C6	R239	*D5	R354	*C6	R463	E3	R718	E1	R857	C1	RB44	A2
C34	C2	C187	D3	C403	*A4	C556	E2	CL2	*D2	IC44	F6	IC167	A5	Q54	B5	R47	*E4	R137	F2	R240	*D5	R355	B6	R464	*A6	R719	E1	R858	C1	RB46	B3
C35	*C2	C188	*D6	C404	A4	C557	E2	CL3	*D2	IC45	*F6	IC168	A5	Q55	B5	R48	F5	R138	*D1	R241	*D5	R356	B6	R500	*B3	R720	E1	R859	C1	RB47	B3
C36	*C2	C189	*D6	C407	*A4	C558	E2	CL4	*D3	IC46	*F6	IC181	F1	Q56	B5	R49	F5	R139	*B6	R242	D2	R357	*B6	R501	*B3	R721	E1	R860	C1	RB49	C5
C37	C2	C190	*C6	C408	C3	C559	E2	CL7	*A3	IC47	C3	IC182	F2	Q59	B5	R50	*F5	R140	C4	R243	*D5	R358	*B6	R502	*A3	R722	E2	R861	C1	RB51	*A6
C38	D2	C191	*D6	C409	A2	C560	E2	CL8	*A3	IC48	C5	IC183	F1	Q60	B5	R51	*C5	R141	C4	R244	*D5	R359	*B6	R503	*B3	R723	E2	R862	C2	RB52	C4
C39	B4	C193	D3	C410	*A2	C561	E2	CL9	*A4	IC49	*F5	IC185	*E1	Q61	B6	R52	C5	R142	C4	R245	D3	R360	*B6	R504	C3	R724	E2	R863	C2	RB55	C5
C40	B5	C194	*D6	C411	*A4	C562	E2	CL10	*A3	IC50	*E5	IC186	E1	Q63	*A5	R53	*C6	R143	D3	R246	*D3	R361	*B6	R505	C3	R725	E2	R864	C2	RB56	*E6
C41	B5	C195	*D6	C416	C3	C563	E2	CL11	*A3	IC51	*E5	IC187	E1	Q64	*A5	R54	C5	R144	*F6	R248	*E6	R365	C5	R506	*A4	R726	E2	R865	C2	RB57	*F2
C42	*A4	C196	*C6	C417	C3	C564	E2	CL12	*A4	IC52	*E6	IC189	D2	Q65	B6	R55	*C5	R145	F6	R249	*E6	R367	C5	R507	C3	R727	E2	R866	C1	RB58	*B2
C43	*A4	C197	D3	C420	*C3	C565	E2			IC53	*E4	IC190	D1	Q66	*B6	R56	*B5	R146	*E4	R250	*C6	R368	*C5	R508	*A4	R728	E2	R867	C1	RB59	*B1
C44	C3	C199	*F6	C421	C3	C566	D1	CN1	D6	IC54	F2	IC191	D1	Q67	B6	R57	*B6	R147	*E5	R251	C3	R369	C5	R509	C3	R729	E2	R868	C1	RB60	D3
C45	B2	C200	F6	C423	C3	C567	D1	CN2	B6	IC55	*E4	IC192	E1	Q68	*A5	R58	B5	R148	C3	R252	C3	R370	*C5	R510	C3	R730	E2	R869	C1	RB61	D3
C46	A2	C201	F6	C424	C3	C568	*D3	CN4	F4	IC56	F5	IC193	E1	Q69	*A5	R59	B5	R149	C3	R253	B1	R371	C5	R511	C3	R731	E2	R870	C1	RB62	D3
C47	*A3	C202	*F6	C425	C2	C569	*D1	CN5	E5	IC57	*F5	IC203	*D4	Q71	A6	R60	*C1	R150	*E4	R254	*D5	R372	C5	R512	*D5	R732	E2	R871	C1	RB63	D3
C48	*F6	C203	*F6	C426	C3	C570	*E1	CN6	B5	IC58	F5	IC204	*D4	Q73	A6	R61	*B1	R151	*E4	R255	*D5	R373	*C5	R513	*D5	R733	E2	R872	C1		
C49	*D5	C204	F6	C429	C3	C571	*D1	CN9	D2	IC59	*F5	IC205	*F4	Q75	*A5	R62	C2	R152	*E4	R256	*C3	R374	*C5	R526	C3	R734	E2	R873	C1	S1	A3
C50	*D5	C205	*E4	C430	C3	C572	E1	CN11	B1	IC60	D4	IC206	D3	Q91	*C3	R63	*B2	R153	*E4	R257	F6	R375	B5	R529	C3	R735	E2	R874	C1	S2	B2
C51	*C1	C206	*E4	C432	*D5	C573	*E1	CN12	B2	IC61	D5	IC207	D3	Q92	*B6	R64	*C2	R154	*F5	R258	F6	R376	*B5	R532	C3	R736	E2	R875	C1	S4	A3
C52	C1	C219	*E5	C433	D5	C575	*D1	CN13	B2	IC62	*E4	IC208	E4	Q105	E2	R65	*C1	R155	*F4	R259	F6	R377	*B5	R533	C3	R737	*D1	R876	C2		
C53	*B6	C221	*D4	C434	*D5	C576	E1	CN14	D4	IC63	D3	IC209	D4	Q106	E2	R66	*F1	R156	*E5	R260	*F6	R378	B5	R536	C2	R738	*D1	R877	C2	X1	*A2
C54	*D5	C222	D4	C435	*D5	C577	E1	CN16	E2	IC64	D2	IC242	D1	Q107	E2	R67	*F1	R157	*F5	R261	*F6	R379	B5	R537	C3	R739	*D1	R878	C2	X2	*C3
C55	*C6	C228	*F5	C437	*A2	C579	*E1			IC65	C4	IC243	*D1	Q108	E2	R68	*F1	R158	*F5	R262	D3	R380	*B5	R538	C3	R740	*D1	R879	C2	X3	B5
C56	*B5	C229	*F5	C438	*B2	C591	*F3	CP1	F6	IC66	*B1	IC244	*D1	Q109	E2	R69	*F5	R159	*F5	R263	*D6	R381	B5	R539	*C3	R741	D1	R880	C1		
C57	D2	C230	*F5	C441	*B2	C592	*F3			IC67	F1	IC245	*D1	Q110	E2	R70	*E6	R160	D4	R264	*D4	R382	B5	R542	*C3	R742	*D1	R881	C1		
C58	*E6	C231	*F5	C443	A3	C593	*F3	D2	*F5	IC68	*D5	IC248	*D2	Q197	D2	R71	*E6	R163	E2	R265	*D4	R383	B5	R543	*C3	R743	*D1	R882	C1		
C59	*D2	C232	*F5	C444	A3	C594	E3	D3	*F5	IC69	*F5	IC249	*D1	Q198	D1	R72	*D5	R164	D2	R267	F6	R384	B5	R544	C3	R744	*E1	R883	C1		
C60	*D2	C233	*F5	C445	B3	C595	*F4	D4	*F5	IC70	F5	IC250	*C2	Q199	C2	R73	*D6	R166	*D6	R271	C5	R385	B5	R545	C3	R745	*E1	R884	C1		
C61	*D2	C234	F5	C446	B3	C596	*F4	D5	*D6	IC71	E5	IC251	*C1	Q200	C1	R74	*A4	R168	*D6	R272	C5	R386	B5	R546	C2	R746	*E1	R885	C1		
C62	*D2	C237	*D4	C447	B3	C597	F4	D6	E2	IC72	*C4	IC252	*C1	Q201	D2	R75	*C6	R169	*D6	R273	F6	R387	B5	R547	C2	R747	*E1	R886	C1		
C63	*F6	C238	*D4	C448	B3	C598	E4	D7	*C6	IC73	*E5	IC253	*C1	Q202	D1	R76	C2	R170	*D6	R275	B3	R389	*B6	R548	C3	R748	E1	R887	C1		
C64	*F6	C239	*D5	C449	B3	C599	*E4	D8	*D6	IC74	E4	IC254	*C1	Q203	C2	R77	C2	R173	*D6	R276	*D5	R390	B5	R549	C2	R749	*E1	R888	C1		
C65	A4	C240	*D5	C450	*A2	C600	*E4	D9	*D6	IC75	E6	IC255	*C2	Q204	C1	R78	C2	R175	*C6	R277	*D5	R391	B5	R560	C3	R750	*E1	R889	C1		
C66	D3	C241	*D5	C451	A4	C601	*E4	D10	*C6	IC76	E6	IC256	*B2	Q205	C2	R79	*D2	R176	*C6	R278	*A3	R392	B5	R561	C3	R751	*E1	R890	C2		
C67	*C3	C247	*D4	C453	A4	C602	*D3	D11	*F5	IC77	E6	IC258	*D1	Q206	C2	R80	F6	R177	*D6	R279	*A3	R393	B6	R562	C3	R752	*E1	R891	C2		
C78	*C2	C248	*D4	C462	C5	C603	*D3	D13	B5	IC78	E6	IC259	D1	Q207	B2	R81	*F6	R178	*D6	R280	*A3	R394	B6	R563	C2	R753	*E1	R892	C2		
C79	*C2	C249	*D4	C465	C4	C604	*E3	D14	*C3	IC79	*E3	IC260	*D1	Q208	C2	R82	*F6	R179	*C6	R281	*A3	R395	B5	R564	C2	R754	*E1	R893	C2		
C80	*E6	C259	*D4	C466	C4	C605	*D3	D15	*D4	IC80	C5	IC261	*D1	Q209	C2	R83	*A4	R183	D3	R282	*C3	R396	B6	R565	C3	R755	E1	R894	*B2		
C81	*D5	C260	*D5	C467	*F4	C607	F4	D16	*D5	IC81	F6	IC606	E3	Q210	B2	R84	*D2	R185	D3	R283	*B6	R398	*B5	R566	C3	R756	*E1	R895	*B2		
C82	*D6	C261	*D5	C471	A4	C608	E4	D40	*B6	IC82	*C6			Q211	C1	R85	*D2	R187	D3	R287	*C2	R399	*A5	R567	*D5	R757	*E1	R896	*B2		
C83	C2	C262	*D5	C472	C4	C609	E4	D41	B5	IC83	A4	IS10	*A4	Q332	B5	R86	D2	R188	D3	R288	*D2	R400	B6	R568	*D6	R800	*F4	R897	*C2		
C84	*D5	C263	*D5	C473	*D5	C610	F3	D51	*A3	IC84	C5	IS11	*B4	Q1000	C5	R87	*A4	R190	*E6	R289	*D1	R401	A6	R569	*D5	R801	*F4	R898	*C2		
C85	C2	C264	*D5	C475	A4	C611	*F3	D55	*A5	IC85	A5			Q1001	*C5	R88	C2	R191	A3	R291	D3	R402	A6	R570	*D5	R802	*D1	R899	C2		
C86	*D6	C265	*D5	C476	*A5	C612	E3	D56	*A5	IC86	*D3	L1	B5	Q1002	B5	R89	*A4	R192	B3	R292	D3	R403	B6	R571	*D5	R809	*D3	R900	C2		
C87	C2	C267	*D5	C477	*A5	C613	E3	D57	A2	IC87	F5	L2	*B2			R90	A4	R193	B3	R293	*D3	R404	B6	R572	*D5	R810	*D1	R901	B2		
C88	C2	C268	*D5	C478	*A3	C614	E3	D69	C1	IC88	*F5	L3	*A4	R1	*A5	R91	C2	R194	D3	R294	D3	R405	B6	R591	C4	R811	D1	R902	C2		
C93	C2	C269	*D5	C479	*A3	C615	E4			IC89	*F5	L4	*D6	R2	*A5	R92	B6	R195	D3	R295	F6	R406	B6	R606	B2	R812	D1	R903	C2		
C99	*F6	C295	*F6	C480	*A2	C616	*E3	E1	A2	IC90	*A5	L5	*F6	R3	A5	R93	C2	R196	D3	R297	*F5	R407	*B6	R607	*A5	R813	D1	R904	B2		
C100	*F6	C300	*B5	C481	A4	C793	*C1	E2	*D3	IC91	*D3	L6	*D5	R4	A5	R94	C2	R197	D3	R298	*E5	R408	*B6	R608	*A5	R814	D1	R905	C2		
C102	*E4	C301	*B5	C482	C3	C796	D1			IC92	*D1	L7	C6	R5	B3	R95	*C2	R198	*B6	R300	*B5	R409	*B6	R609	*A5	R815	*F3	R906	C2		
C103	*E5	C315	*B1	C483	*C3	C797	D1	IC1	*A5	IC93	C6	L9	*D5	R6	*A3	R96	C5	R199	*B6	R301	C5	R410	*B6	R610	*A5	R816	*F3	R907	B2		
C105	*E5	C316	*C5	C484	*B3	C798	D1	IC2	A3	IC94	*F5	L10	*D5	R7	*A3	R97	*E6	R200	*C6	R302	*B5	R411	C6	R611	A2	R817	*F3	R908	*B2		
C106	*D3	C317	*C5	C485	*B3	C799	D1	IC3	D3	IC95	*E5	L11	E5	R8	B2	R98	C2	R201	*C6	R303	*B6	R412	C6	R613	B3	R819	E3	R909	*B2		
C107	D3	C318	*C5	C486	*B3	C801	D1	IC4	*C2	IC96	*B5	L12	D6	R9	B5	R99	*D2	R202	C4	R304	*E6	R413	A5	R617	*E4	R820	E3	R910	*B2		
C109	E3	C319	*A6	C487	*C3	C802	D1	IC5	*D2	IC97	*F5	L13	D6	R10	B5	R100	*E6	R203	C1	R305	*E6	R414	*A5	R619	*E4	R821	D1	R911	*D5		
C111	A5	C323	*C6	C488	C3	C803	D1	IC6	D2	IC100	B6	L14	D6	R11	B5	R101	*C4	R204	E2	R306	*B6	R415	*A5	R620	*E4	R822	D1	R912	*D2		
C112	*E6	C324	B6	C499	C4	C804	C2	IC7	C4	IC101	A5	L15	E6	R12	C4	R102	*D5	R205	*D2	R308	*E5	R416	*A5	R625	*C3	R823	D2	R913	B1		
C113	*D6	C325	*C6	C500	A3	C805	C1	IC8	A4	IC102	A6	L16	E6	R13	C6	R103	F5	R206	*D2	R309	C6	R417	*A6	R628	A2	R824	D2	R914	*E5		
C114	*D6	C326	B6	C501	B3	C806	D2	IC9	A4	IC103	A6	L18	D6	R14	D3	R104	F5	R207	E3	R310	C4	R418	*A5	R630	*E4	R825	D2	R915	*E5		

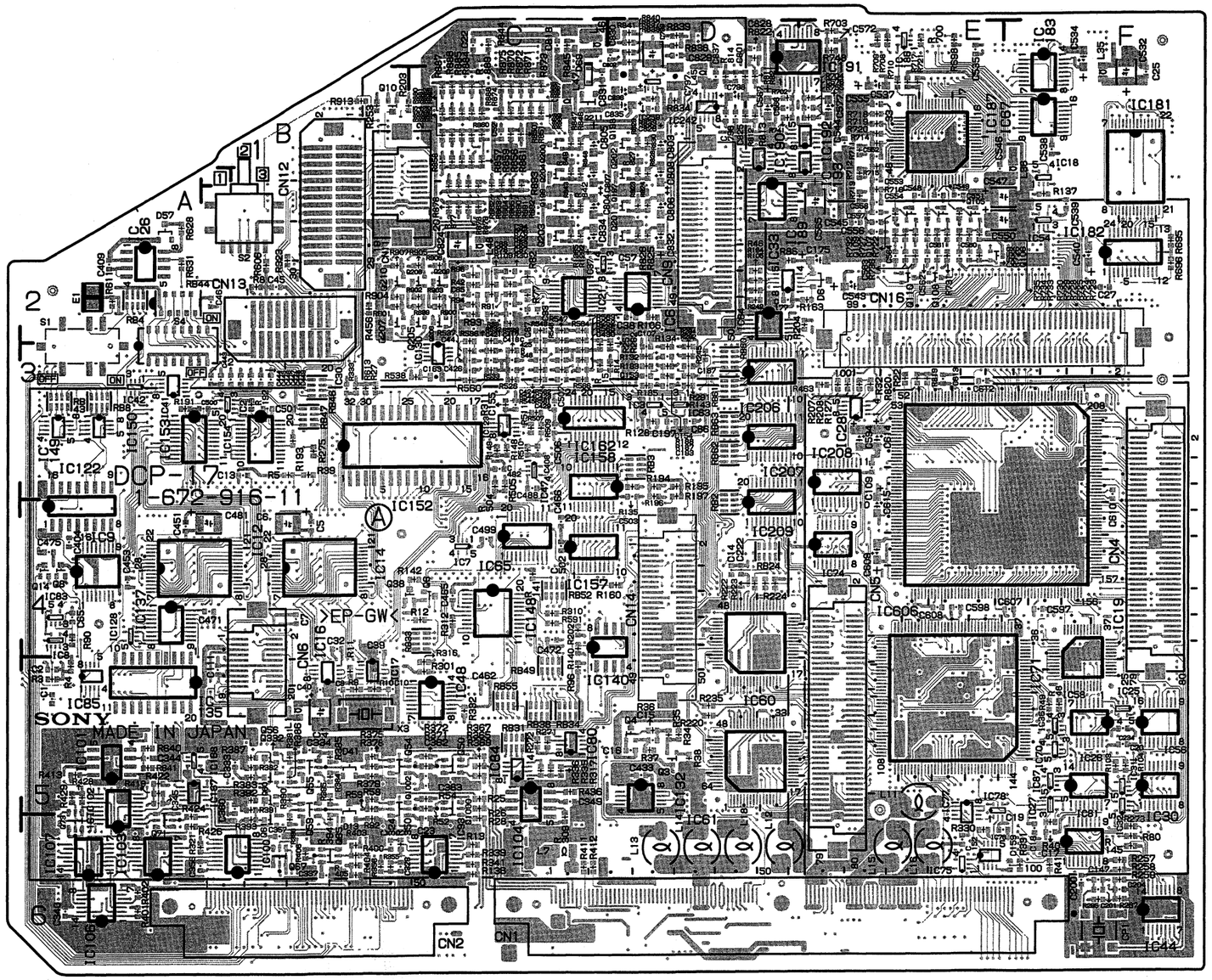

Components locations list ; previous page

DCP-17 -A SIDE-
SUFFIX:-11

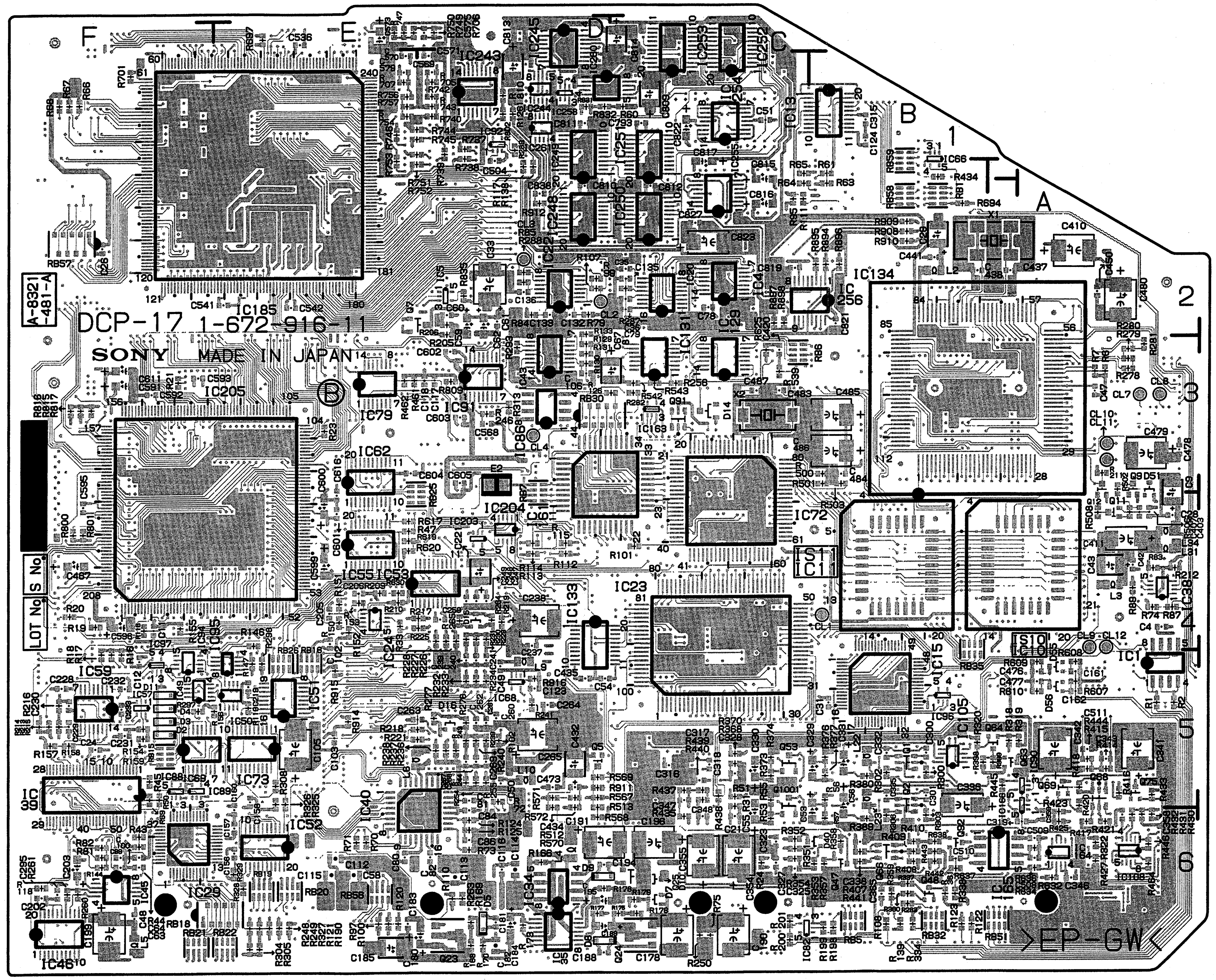

DCP-17 -B SIDE-

SUFFIX:-11

AD-155, BF-74

AD-155(1-672-915-11)

*:B SIDE

C1	*C3	Q5	*B2	R75	*A2
C2	*C2	Q6	*C2	R76	*A2
C3	*C2	Q7	*C2	R77	*A2
C4	B2	Q8	B3	R78	*A2
C5	*B2	Q9	*B3	R79	*A2
C6	*B1	Q10	*B3	R80	*A2
C7	*B2	Q11	*B2	R81	*A2
C8	B2	Q12	*B2	R82	*A2
C9	*C1	Q13	*B2	R83	*A2
C10	*C1	Q14	A3	R84	*A2
C11	*C1	Q15	*A3	R85	*A2
C12	*C2	Q16	*A3	R86	*A2
C13	C2	Q17	*A2	R87	*A2
C14	C2	Q18	*A2	R88	*A2
C15	*C1	Q19	*A2	R89	*A2
C16	*C2	Q20	A2	R90	*A2
C17	C1			R91	A1
C18	*C2	R1	B3	R92	A1
C19	C2	R2	*C2	R93	*C2
C20	*B3	R3	C3	R94	C2
C21	*B2	R4	B3	R95	B2
C22	*B2	R5	A3	R96	A2
C23	B2	R6	B3		
C24	*B2	R7	B3		
C25	*B1	R8	B3		
C26	*B2	R9	B3		
C27	B2	R10	C3		
C28	*B1	R11	C3		
C29	*B1	R12	C3		
C30	*B1	R13	C3		
C31	*B2	R14	C3		
C32	B2	R15	C3		
C33	B2	R16	C3		
C34	*B1	R17	*C2		
C35	*B2	R18	*B2		
C36	B1	R19	*C2		
C37	A3	R20	*C2		
C38	A3	R21	*B2		
C39	A3	R22	*C2		
C40	*A3	R23	*C2		
C41	*A2	R24	*C2		
C42	*A2	R25	*C2		
C43	A2	R26	*C2		
C44	*A2	R27	*C2		
C45	*A1	R28	*B2		
C46	*A2	R29	*C2		
C47	A2	R30	*C2		
C48	*A1	R31	*C2		
C49	*A1	R32	*C2		
C50	*A1	R33	*C2		
C51	*A2	R34	*C2		
C52	A2	R35	C2		
C53	A2	R36	B3		
C54	*A1	R37	B3		
C55	*A2	R38	B3		
C56	A1	R39	B3		
C57	A1	R40	B3		
C58	A1	R41	B3		
C59	C2	R42	B3		
C60	C2	R43	B3		
C61	B2	R44	B3		
C62	A2	R45	B3		
C63	C2	R46	*B2		
C64	B2	R47	*B2		
C65	A2	R48	*B2		
		R49	*B2		
CL1	*B2	R50	*B2		
CL2	*B2	R51	*B2		
CL3	*A2	R52	*B2		
		R53	*B2		
CN1	B3	R54	*B2		
CN2	B1	R55	*B2		
		R56	*B2		
FL1	C2	R57	*B2		
FL2	B2	R58	*B2		
FL3	B2	R59	*A2		
FL4	B2	R60	*A2		
FL5	A2	R61	*A2		
FL6	A2	R62	*A2		
		R63	*B2		
IC1	B2	R64	A3		
IC2	C2	R65	A3		
IC3	C1	R66	A3		
IC4	A2	R67	A3		
IC5	B1	R68	A3		
IC6	A1	R69	A3		
		R70	A3		
Q1	C3	R71	A3		
Q2	*C3	R72	A3		
Q3	*C3	R73	A3		
Q4	*C2	R74	*A2		

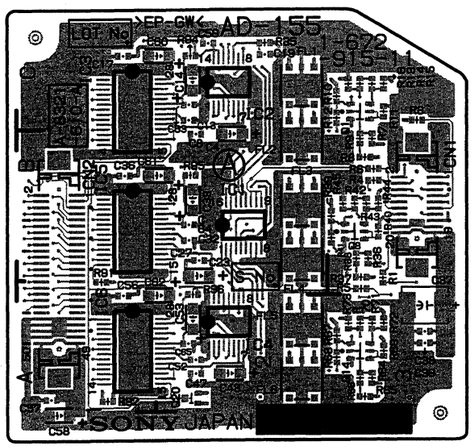

AD-155 -A SIDE-
SUFFIX:-11

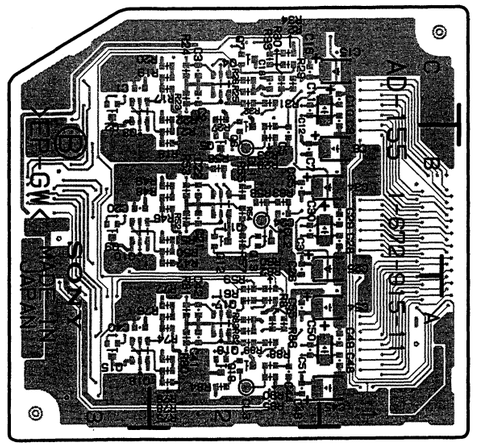

AD-155 -B SIDE-
SUFFIX:-11

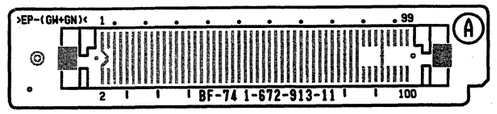

BF-74 -A SIDE-
SUFFIX:-11

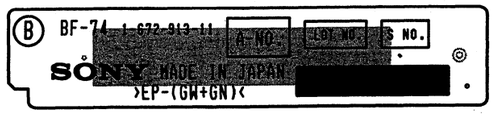

BF-74 -B SIDE-
SUFFIX:-11

5-12

RC-69, RC-75

RC-69 (1-672-904-11)

*:B SIDE

C1	*F5	IC6	F2
C2	A1	IC7	G2
C3	*G2	IC8	F3
C4	*F5	IC9	G3
C5	*F5	IC10	G4
C6	*F4	IC11	C2
C7	*F5	IC12	D2
C8	B1	IC13	E2
C9	*F5	IC14	D3
C10	*G5	IC15	A3
C11	*G5	IC16	*D3
C12	*F2	IC17	*A3
C13	*F3	IC18	D4
C14	*G4	IC19	B4
C15	D2	IC20	E3
C16	*E2	IC21	C3
C17	*C3	IC22	*E3
C18	*A4	IC23	*C3
C19	B5	IC24	E4
C20	*D4	IC25	C4
C21	D4		
C22	*B3	R1	*F5
C23	*A5	R2	*F5
		R3	*F5
CN1	E1	R4	*F4
CN2	C5	R5	*F4
CN3	*E1	R6	*G5
CN4	*C5	R7	*G5
		R8	*F4
IC1	F5	R9	*G5
IC2	F4	R10	*G5
IC3	G5	R11	*F5
IC4	B2	R12	*F3
IC5	A2		

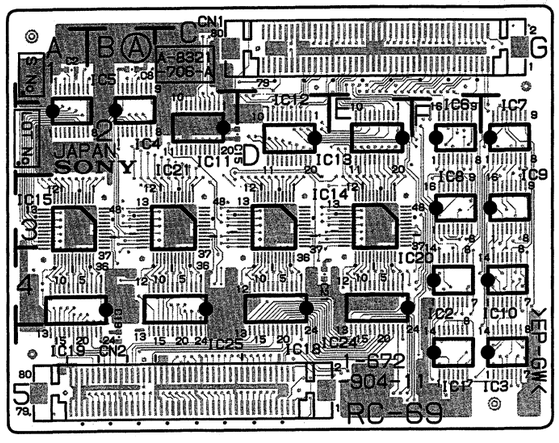

RC-69 -A SIDE-
SUFFIX:-11

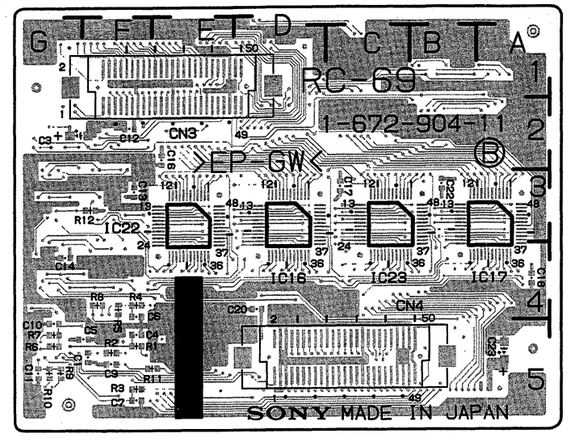

RC-69 -B SIDE-
SUFFIX:-11

RC-75 (1-672-914-11)

*:B SIDE

C1	E1	IC1	*C1
C2	*B1	IC2	*D1
C3	*D2	IC3	*D1
C4	E1	IC4	*E1
C5	B2	IC5	B1
C6	C2	IC6	A1
C7	D2	IC7	B2
C8	E2	IC8	C2
C9	D3	IC9	D2
C10	E3	IC10	E2
C11	B3	IC11	*B2
C12	C3	IC12	*C2
C13	*A2	IC13	*D2
C14	B3	IC14	*E2
C15	*A1	IC15	*B3
		IC16	*C3
CN3	D1	IC17	*D3
CN4	B3	IC18	*E3
		IC19	A2
		IC20	*A2
		IC21	*A3

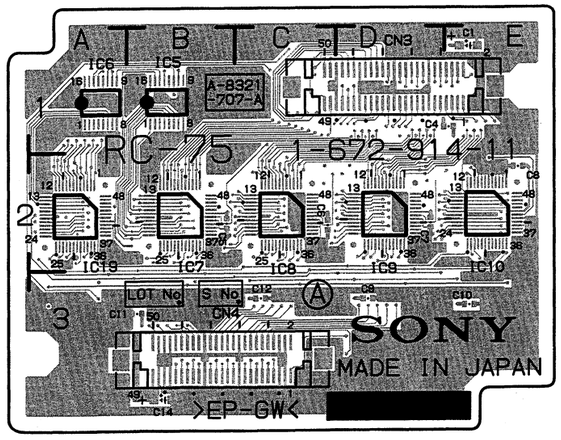

RC-75 -A SIDE-
SUFFIX:-11

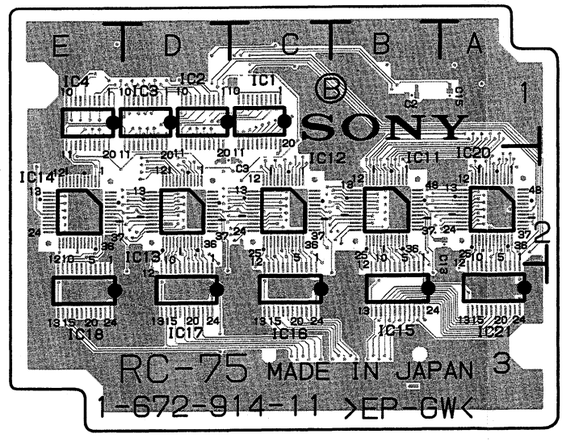

RC-75 -B SIDE-
SUFFIX:-11

5-13

ES-23 (1-672-917-11)
---

*:B SIDE

C1	*E4	C92	*D3	C183	*E2	IC28	F1	Q63	F3	R66	*B3	R157	*A5
C2	*E4	C93	*D4	C184	F2	IC29	E2	Q64	*E3	R67	*B4	R158	*B5
C3	G4	C94	D4	C185	*E2	IC30	E2	Q65	*E4	R68	*B4	R159	*A5
C4	G4	C95	D3	C186	*F2	IC31	E2	Q66	*E4	R69	*B4	R160	*A4
C5	*G4	C96	D3	C187	F2	IC32	E2	Q67	*E3	R70	A4	R161	*A4
C6	*F5	C97	*B3	C188	*E2	IC33	F2	Q68	*D3	R71	*B3	R162	*B4
C7	*F4	C98	B3	C189	*E2	IC34	F2	Q69	D3	R72	*A4	R163	*B4
C8	*E5	C99	B3	C190	*F2	IC35	*G2	Q70	*D3	R73	*B4	R164	*A4
C9	*E5	C100	C4	C191	F2	IC36	*F2	Q71	*D3	R74	*B4	R165	*B4
C10	*E4	C101	*C3	C192	*G1	IC37	E1	Q72	D3	R75	*B4	R166	*A4
C11	*D4	C102	*C3	C193	*G1	IC38	*E1	Q73	*B3	R76	*A4	R167	*A3
C12	*D4	C103	*C3	C194	*G2	IC39	E1	Q74	B2	R77	*A4	R168	*A4
C13	*D4	C104	C3	C195	*E1	IC40	*B4	Q75	A3	R78	*A4	R169	A3
C14	*C4	C105	*C3	C196	B4	IC41	*B3	Q76	*A1	R79	B3	R170	*A3
C15	*D4	C106	B3	C197	*B4	IC42	E3	Q77	B1	R80	*B3	R171	A4
C16	*D5	C107	*B3	C198	*D1	IC43	*F1	Q78	B1	R81	*A3	R172	*A4
C17	*C4	C108	*B2	C199	*E2	IC44	*F1	Q79	B1	R82	*A3	R173	*A3
C18	*C5	C109	*B3	C200	*F4	IC45	*F1	Q80	B1	R83	A3	R174	*A3
C19	*D5	C110	*B3	C201	*E2			Q81	B2	R84	A3	R175	*A4
C20	C4	C111	*G4	C202	F5	L1	B3	Q82	*D1	R85	*A3	R176	*A4
C21	C4	C112	*E3	C203	G4	L2	B2	Q83	D2	R86	*A3	R177	A3
C22	*B4	C113	*G3			L3	*A2	Q84	D2	R87	A3	R178	*A4
C23	*B4	C114	*G3	CL1	*D3	L4	B3	Q85	*D2	R88	*A3	R179	*A4
C24	*B4	C115	E3	CL2	*D3	L5	B3	Q86	B2	R89	*D4	R180	A4
C25	*B4	C116	*G4			L6	*D2	Q87	*E2	R90	*E4	R181	*B3
C26	*B4	C117	F3	CN1	*C3	L7	D2			R91	*E4	R182	*F3
C27	B2	C118	F2	CN2	*F3	L8	F2	R1	F4	R92	*C3	R183	C3
C28	*B3	C119	*E3			L9	B1	R2	F4	R93	*C3	R184	C3
C29	*B4	C120	*E3	CP2	G2			R3	G4	R94	F5	R185	C4
C30	B4	C121	E4			Q1	G4	R4	G4	R95	F3	R186	C3
C31	B4	C122	D3	D1	*B3	Q2	G4	R5	*G4	R96	F3	R187	F4
C32	A2	C123	*D3	D2	E4	Q3	F4	R6	F4	R97	F3	R190	*F3
C33	*B3	C124	*D3	D3	A3	Q4	F4	R7	G4	R98	F4	R191	*F3
C34	*A3	C125	D3	D4	*A3	Q5	*F4	R8	*G4	R99	F4	R192	*G3
C35	B2	C126	D2	D5	*B1	Q6	F5	R9	*F4	R100	*F4	R193	*G3
C36	F4	C127	D2	D6	*B1	Q7	*E4	R10	*F4	R101	*F4	R194	*G4
C37	*G4	C128	*C3	D7	*A2	Q8	*E4	R11	*F4	R102	*F4	R195	*G3
C38	*F4	C129	C3	D8	B2	Q9	E4	R12	*F4	R103	*F4	R196	G3
C39	*F4	C130	B3	D9	*B2	Q10	D4	R13	*F4	R104	*F4	R197	*G3
C40	*F4	C131	*B3			Q11	*D5	R14	*F4	R105	*E4	R198	G3
C41	*E4	C132	*C3	DL1	C4	Q12	*C4	R15	F4	R106	*F4	R199	*G3
C42	*E4	C133	*B3	DL2	D4	Q13	*C4	R16	F5	R107	*F4	R200	*F3
C43	F3	C134	A3			Q14	*C4	R17	F5	R108	*E4	R201	G3
C44	*E4	C135	B3	E1	C2	Q15	*B4	R18	*F5	R109	*F4	R202	G3
C45	*D5	C136	A3			Q16	*B4	R19	*F5	R110	*E4	R203	G3
C46	*D5	C137	*B3	FL1	E5	Q17	*B4	R20	*F4	R111	*E4	R204	G3
C47	*B4	C138	*A1	FL2	E5	Q18	*B4	R21	*F4	R112	*E4	R205	F3
C48	*D4	C139	A1	FL3	B4	Q19	*A4	R22	*E4	R113	*F3	R206	F3
C49	*C4	C140	*A1	FL4	B4	Q20	*A3	R23	*E4	R114	*D4	R207	F3
C50	*C4	C141	*A1	FL5	F4	Q21	*A3	R24	*E4	R115	*E4	R208	F3
C51	*D4	C142	*B1	FL6	E4	Q22	D4	R25	*E5	R116	*D5	R209	F3
C52	*D4	C143	*A1	FL7	B5	Q23	F5	R26	*E5	R117	*D4	R210	F3
C53	*C4	C144	*B1	FL8	A4	Q24	G5	R27	*E5	R118	E5	R211	*F3
C54	B3	C145	*B2	FL9	F3	Q25	F4	R28	E4	R119	E5	R212	*F3
C55	*C4	C146	*B1	FL10	E3	Q26	*E4	R29	*E4	R120	*E5	R213	*F3
C56	*C4	C147	*B1	FL11	D4	Q27	*E3	R30	*D4	R121	D5	R214	*E3
C57	A5	C148	*B1	FL12	B3	Q28	E5	R31	*D4	R122	D5	R215	*F3
C58	*B4	C149	*B1	FL13	B3	Q29	D5	R32	*D4	R123	*C4	R216	*F3
C59	*B4	C150	*B2	FL14	E3	Q30	*D4	R33	E4	R124	*D4	R217	*E3
C60	*B5	C151	*B2	FL15	E3	Q31	*C5	R34	*E4	R125	*D4	R218	*E3
C61	B5	C152	*A2	FL16	D3	Q32	*C5	R35	D4	R126	D4	R219	*F3
C62	B4	C153	*B2	FL17	B3	Q33	*C5	R36	D4	R127	*C4	R220	*F3
C63	*B5	C154	B2	FL18	A1	Q34	*B4	R37	E4	R128	*C4	R221	*E4
C64	A4	C155	B2			Q35	*B5	R38	*D4	R129	*C4	R222	*E4
C65	*B5	C156	*B2	IC1	E4	Q36	*A5	R39	*D5	R130	*C4	R223	E4
C66	*A5	C157	A2	IC2	*D4	Q37	*B4	R40	*C4	R131	*C4	R224	E4
C67	*A4	C158	*B2	IC3	*B3	Q38	A3	R41	*D5	R132	*C5	R225	*E3
C68	*A4	C159	A1	IC4	G5	Q39	A4	R42	*D5	R133	*C5	R226	E4
C69	*B4	C160	*B2	IC5	*F4	Q40	*F4	R43	*C5	R134	*C4	R227	*E4
C70	B4	C161	*C1	IC6	E3	Q41	G4	R44	*D5	R135	*C4	R228	*E4
C71	*B4	C162	C1	IC7	*A5	Q42	G4	R45	*D4	R136	*C4	R229	*E3
C72	*A4	C163	D2	IC8	*A4	Q43	F3	R46	*C4	R137	*C5	R230	*E3
C73	A3	C164	*C1	IC9	B3	Q44	G3	R47	*C4	R138	*B5	R231	*E3
C74	A3	C165	D1	IC10	F3	Q45	F3	R48	*C4	R139	*C5	R232	*E3
C75	*A3	C166	D2	IC11	E3	Q46	*F3	R49	*C4	R140	*C4	R233	E3
C76	*A4	C167	*C1	IC12	E3	Q47	*E4	R50	*C4	R141	*C4	R234	E3
C77	*B3	C168	*C1	IC13	C3	Q48	E4	R51	*C4	R142	*C5	R235	*D3
C78	G4	C169	*D1	IC14	E3	Q49	*E3	R52	*C4	R143	*B4	R236	*D3
C79	G4	C170	*D1	IC15	E3	Q50	*D4	R53	*C4	R144	*B4	R237	*D3
C80	*G3	C171	D1	IC16	*B3	Q51	D3	R54	*C4	R145	*B4	R238	*D3
C81	*G3	C172	*D1	IC17	B1	Q52	*D4	R55	*B4	R146	*B5	R239	*D3
C82	*G3	C173	*D1	IC18	B2	Q53	*D4	R56	*B4	R147	*B5	R240	*D4
C83	*G3	C174	*D1	IC19	C2	Q54	D3	R57	*B4	R148	*B5	R241	*D3
C84	F3	C175	D2	IC20	D1	Q55	*C3	R58	*B4	R149	*B5	R242	*D4
C85	F3	C176	*D2	IC21	C1	Q56	*C3	R59	B4	R150	*B4	R243	*D3
C86	*F3	C177	*C2	IC22	D2	Q57	C3	R60	*B4	R151	*B5	R244	*D4
C87	*F3	C178	*C2	IC23	C2	Q58	*C3	R61	*B4	R152	*C2	R245	*D4
C88	*E3	C179	E2	IC24	C2	Q59	*B3	R62	*B4	R153	*B5	R246	*D3
C89	*D3	C180	*E2	IC25	B2	Q60	*B3	R63	*B4	R154	B4	R247	*D4
C90	E4	C181	E2	IC26	*A2	Q61	G3	R64	*B4	R155	*B5	R248	*C3
C91	D3	C182	E2	IC27	A2	Q62	G3	R65	*B4	R156	*A5	R249	*D3

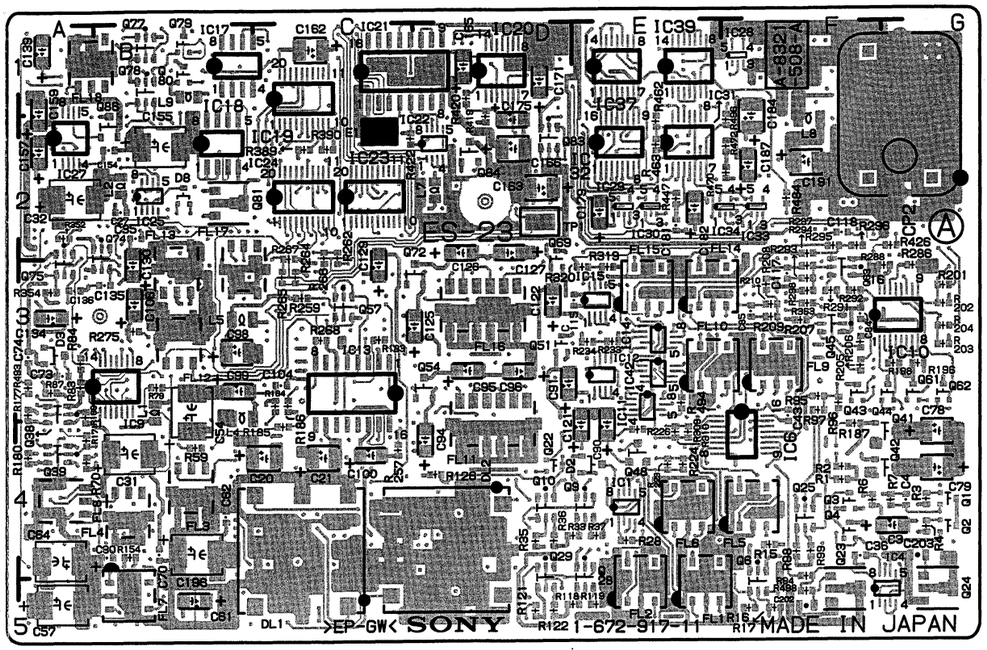

ES-23/23P -A SIDE-
SUFFIX:-11

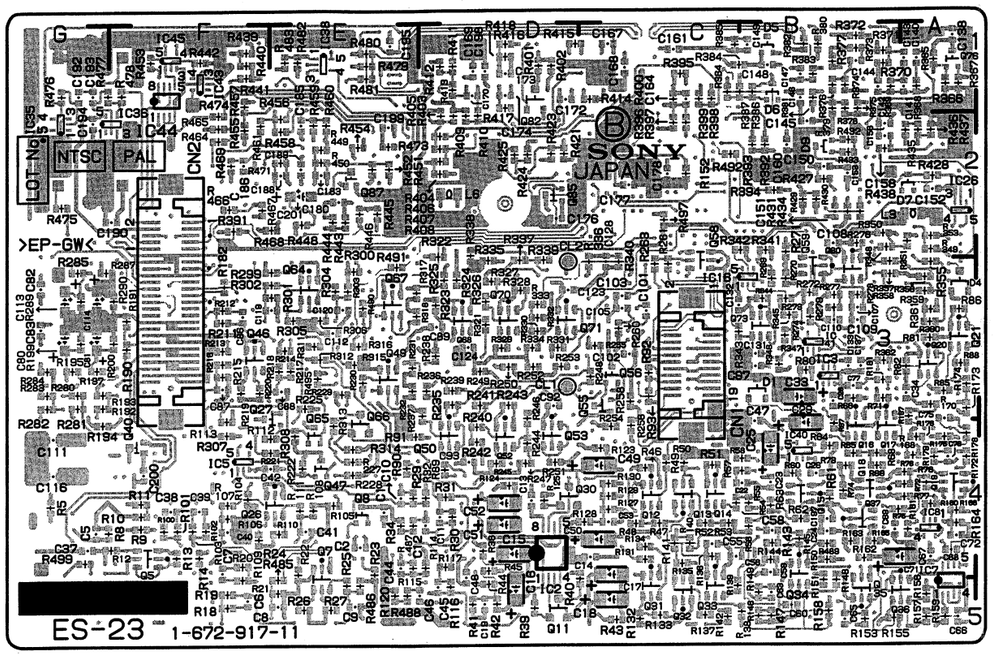

ES-23/23P -A SIDE-

SUFFIX:-11

R250	*D3	R341	*B2	R433	*B2
R251	*D4	R342	*B2	R434	*B2
R252	*D3	R343	*C3	R435	*A2
R253	*D3	R344	*B3	R436	*A2
R254	*C4	R345	*B3	R437	*A2
R255	*C3	R346	*B3	R438	*B2
R256	*C4	R347	*B3	R439	*F1
R257	C4	R348	*B2	R440	*F1
R258	*C3	R349	*A2	R441	*F1
R259	C3	R350	*B2	R442	*F1
R260	*C3	R351	*A2	R443	*E2
R261	*C3	R352	A2	R444	*E2
R262	C3	R353	*A2	R445	*E2
R263	*C3	R354	A3	R446	*E2
R264	C3	R355	*A3	R447	E2
R265	C3	R356	*A3	R448	*E2
R266	C3	R357	*B3	R449	*E2
R267	C3	R358	*B3	R450	*E2
R268	C3	R359	*A3	R451	*E2
R269	*B3	R360	*A3	R452	*E2
R270	*B3	R361	*A3	R453	*F1
R271	*B2	R362	*B3	R454	*E2
R272	*B3	R363	F3	R455	*F2
R273	*B3	R364	*C1	R456	*E2
R274	*B3	R365	*A1	R457	*F1
R275	B3	R366	*A1	R458	*E2
R276	*B2	R367	*A1	R459	*E2
R277	*B3	R368	*A1	R460	*E2
R278	*B3	R369	*B1	R461	*F2
R279	*B3	R370	*B1	R462	E2
R280	*G3	R371	*B1	R463	E2
R281	*G3	R372	*B1	R464	*F2
R282	*G3	R373	*B1	R465	*F2
R283	*G3	R374	*B1	R466	*F2
R284	*G3	R375	*B1	R467	*F2
R285	*G3	R376	*B1	R468	*E2
R286	G3	R377	*B1	R469	*F2
R287	*G3	R378	*B1	R470	F2
R288	G3	R379	*B1	R471	*E2
R289	*G3	R380	*B1	R472	F2
R290	*F3	R381	*B1	R473	*E2
R291	F3	R382	*B1	R474	*F2
R292	F3	R383	*B1	R475	*G2
R293	F3	R384	*C1	R476	*G1
R294	F3	R385	*C1	R477	*G1
R295	F2	R386	*B1	R478	*F1
R296	F2	R387	*B1	R479	*E1
R297	F2	R389	C2	R480	*E1
R298	F3	R390	C2	R481	*E1
R299	*E3	R391	*F2	R482	*E1
R300	*E3	R392	*B2	R483	*E1
R301	*E3	R393	*B2	R484	F2
R302	*E3	R394	*B2	R485	*E5
R303	*E3	R395	*C1	R486	*E5
R304	*E3	R396	*C2	R487	*E4
R305	*E3	R397	*C2	R488	*E5
R306	*E3	R398	*C1	R489	*B4
R307	*F4	R399	*C1	R490	*E3
R308	*E4	R400	*C1	R491	*E3
R309	E4	R401	*D1	R492	*C2
R310	E4	R402	*D1	R493	A3
R311	*E3	R403	*D2	R494	E3
R312	*E3	R404	*D2	R495	*E3
R313	*E4	R405	*D2	R496	F2
R314	*E4	R406	*D2	R497	*C2
R315	*E3	R407	*D2	R498	F5
R316	*E3	R408	*D2	R499	*G4
R317	*E3	R409	*D2		
R318	*E3	R410	*D2	TP1	D2
R319	E3	R411	*D1		
R320	E3	R412	*D1		
R321	*D3	R413	*D1		
R322	*D2	R414	*C1		
R323	*D3	R415	*D1		
R324	*D3	R416	*D1		
R325	*D3	R417	*D1		
R326	*D3	R418	*D1		
R327	*D3	R419	D2		
R328	*D3	R420	D1		
R329	*D3	R421	*D2		
R330	*D3	R422	C2		
R331	*D3	R423	*D2		
R332	*D3	R424	*D2		
R333	*D3	R425	*D2		
R334	*D3	R426	G2		
R335	*D3	R427	*B2		
R336	*C3	R428	*A2		
R337	*D3	R429	*B2		
R338	*D2	R430	*B2		
R339	*D3	R431	*B2		
R340	*C3	R432	*B2		

CI-20, CI-21, CN-1573

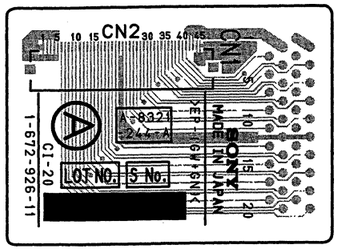

CI-20 -A SIDE-
SUFFIX:-11

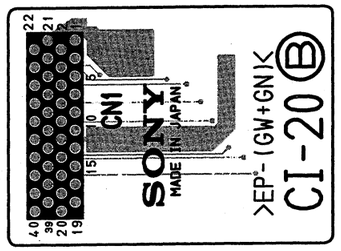

CI-20 -B SIDE-
SUFFIX:-11

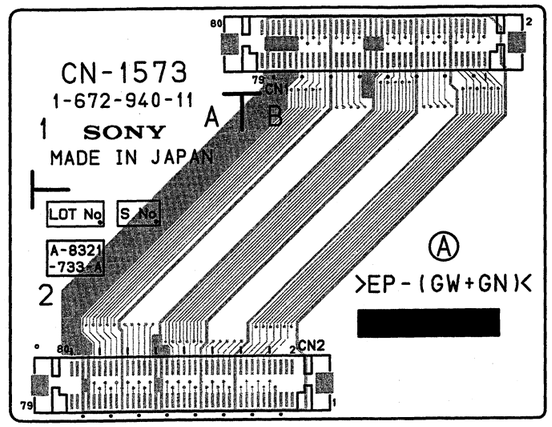

CN-1573 -A SIDE-
SUFFIX:-11

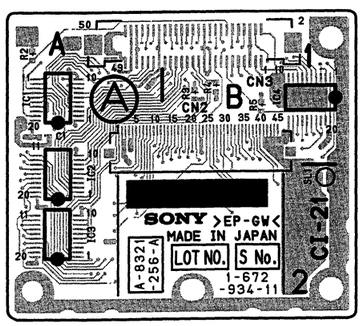

CI-21 -A SIDE-
SUFFIX:-11

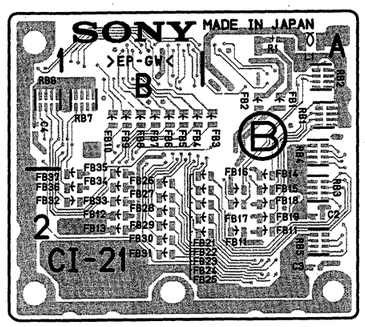

CI-21 -B SIDE-
SUFFIX:-11

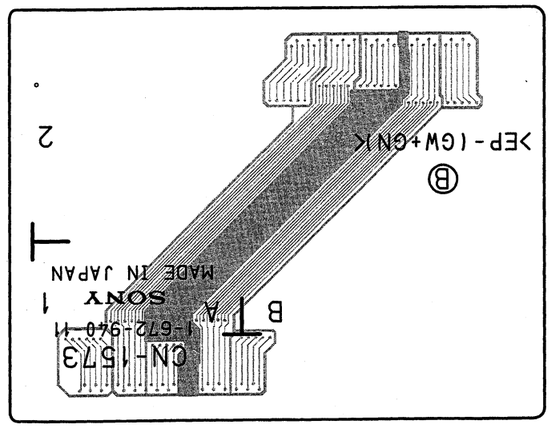

CN-1573 -B SIDE-
SUFFIX:-11

```
--------------------
CI-21 (1-672-934-11)
--------------------

*:B SIDE

C1       A1      FB17   *A2      IC3      A2
C2      *A2      FB18   *A2      IC4      B1
C3      *A2      FB19   *A2
C4      *B1      FB20   *A2      L1      *A1
                 FB21   *A2
CN2      B1      FB22   *A2      R1      *A1
CN3      B1      FB23   *A2      R2       A1
                 FB24   *A2      R3       B1
FB1     *A1      FB25   *A2      R4       B1
FB2     *A1      FB26   *B2      R5       B1
FB3     *A1      FB27   *B2
FB4     *B1      FB28   *B2      RB1     *A1
FB5     *B1      FB29   *B2      RB2     *A1
FB6     *B1      FB30   *B2      RB3     *A2
FB7     *B1      FB31   *B2      RB4     *A1
FB8     *B1      FB32   *B2      RB5     *A2
FB9     *B1      FB33   *B2      RB6     *B1
FB10    *B1      FB34   *B2      RB7     *B1
FB11    *A2      FB35   *B2
FB12    *B2      FB36   *B2      SL1      B2
FB13    *B2      FB37   *B2
FB14    *A2
FB15    *A2      IC1      A1
FB16    *A2      IC2      A2
```


5-16

DVP-17 (1-672-924-12)
---

*:B SIDE

C1	*F9	C224	C8	C314	*F7	C428	*D6	C602	*D4	IC47	G3	L21	*J5	R40	G4	R209	D9	R299	G4
C2	*G8	C225	H7	C315	*H7	C429	*A6	C603	*D4	IC48	G3	L22	K4	R41	J4	R210	*E9	R300	F4
C3	*G8	C226	*C8	C316	F7	C430	*A6	C604	F4	IC49	*E1	L23	*J2	R42	H3	R211	F8	R301	*G5
C4	*G9	C227	F7	C317	*G7	C431	*A6	C605	E3	IC50	F2	L150	J7	R43	G4	R212	D8	R302	*F7
C5	*G8	C228	*F5	C318	*E7	C432	B6	C606	F4	IC51	*H1	L200	G8	R44	J4	R213	E8	R303	*H5
C6	*G8	C229	*G5	C319	G7	C433	B6	C607	F4	IC52	F3	L201	E8	R45	H4	R214	F8	R304	*H5
C7	*H8	C230	*H7	C320	E7	C434	B6	C608	*D3	IC53	*B9	L202	C8	R46	*K5	R215	D8	R305	*H5
C8	*H8	C231	*F7	C321	G7	C435	*B6	C609	*D2	IC150	J7	L203	A8	R47	H3	R216	E8	R306	*H5
C9	*D8	C232	*A5	C322	E7	C436	C6	C610	*D2	IC151	J6	L204	*H8	R48	G4	R217	*F4	R307	*H5
C10	*D8	C233	*H7	C323	*G7	C437	A6	C611	*D3	IC152	*J5	L205	*F8	R49	*C9	R218	*F4	R308	J5
C11	*K2	C234	*H7	C324	*E7	C438	D6	C612	F3	IC153	*J7	L206	*D8	R50	G3	R219	*F4	R309	H5
C20	*K3	C235	*H7	C325	*E7	C439	A6	C613	E2	IC154	*J7	L207	*B8	R51	J4	R220	*F4	R310	H5
C21	G1	C236	*F7	C326	*G7	C440	C6	C614	F2	IC155	J8	L208	*E8	R52	J4	R221	C8	R311	H5
C22	*K3	C237	*H7	C327	*F6	C441	A6	C615	F3	IC200	*F9	L209	*E5	R53	J3	R222	*C8	R312	*H5
C23	*K3	C238	*F7	C328	E6	C442	D6			IC201	*F9	L210	*D5	R54	*C9	R223	H7	R313	H7
C24	J5	C239	*H7	C329	*E5	C443	A6	CN1	K6	IC202	*E5	L211	*F8	R55	J4	R224	C8	R314	G7
C25	*J5	C240	*H7	C330	G6	C444	C6	CN2	*F5	IC203	*D9	L212	*E8	R56	*K5	R225	*C8	R315	G7
C26	J5	C241	*F7	C331	E6	C445	B6	CN3	B9	IC204	E8	L213	H6	R57	J2	R226	F7	R316	F7
C27	G1	C242	*F7	C332	H6	C446	A5	CN4	G9	IC205	*D8	L214	E6	R58	*K4	R227	*H7	R317	E7
C28	H2	C243	*G7	C333	E6	C447	A5	CN5	E1	IC206	*E8	L360	D6	R59	*K4	R228	*H7	R318	*E8
C29	F2	C244	*E7	C334	G6	C448	A6	CN6	H1	IC207	*F8	L361	A6	R60	*J3	R229	*F7	R319	*G8
C30	F2	C245	*H7	C335	E6	C449	A5	CN7	*J8	IC208	H5	L500	*B4	R61	*J3	R230	*F7	R320	E6
C31	H3	C246	*F7	C360	D5	C450	A6	CN8	*G4	IC209	*G6	L501	C2	R62	*J3	R231	*H7	R321	E5
C32	J3	C247	*G7	C361	*B5	C451	*A5	CN9	C1	IC210	*A5	L503	B8	R63	*J2	R232	*F7	R322	E5
C33	H3	C248	*E7	C362	*C8	C455	*C7	CN10	*K5	IC211	*F5	L504	B8	R64	*G3	R233	H7	R323	E5
C34	J3	C249	H7	C363	D7	C456	*C7	CN22	*C5	IC212	E5			R65	*K1	R234	F7	R324	*H6
C35	K4	C250	F7	C364	C8	C457	*C7			IC213	*F6	Q20	J2	R66	J3	R235	*H7	R325	*E8
C36	*K4	C251	*G8	C365	B7	C458	*C7	CP500	*D2	IC214	*E7	Q200	*E9	R67	*K3	R236	*H7	R326	E5
C37	K4	C252	*E8	C366	*B5	C459	*C7	CP501	*D1	IC215	*H6	Q201	*E9	R68	*J2	R237	*H7	R327	E5
C38	K4	C253	H7	C367	*B5	C460	*A7			IC216	*E6	Q202	H7	R69	*K2	R238	*H7	R328	E5
C39	*J2	C254	H5	C368	*D7	C461	*A7	D20	G1	IC217	G8	Q203	F7	R70	*J2	R239	*H7	R329	*E7
C40	*J2	C255	H5	C369	*B7	C462	*A7	D21	J3	IC219	F5	Q204	E8	R71	*G1	R240	E7	R330	E7
C41	*K1	C256	H6	C370	*D7	C463	*A7	D22	*J2	IC220	H5	Q205	*H7	R72	F1	R241	G8	R331	E6
C42	*K2	C257	H5	C371	*B7	C464	*A7	D23	G1	IC221	*H5	Q206	G8	R74	*K2	R242	E8	R332	E5
C43	K2	C258	*G8	C372	*D7	C465	*A7	D24	*K2	IC222	H5	Q207	*A8	R75	*K2	R243	E8	R333	E7
C44	*J1	C259	*G7	C373	*B7	C466	A7	D200	H6	IC223	*H5	Q208	*A7	R76	*K2	R244	G8	R334	*G6
C45	H1	C260	*H6	C374	*D7	C467	*D6	D201	E6	IC224	*H5	Q209	G7	R77	*K2	R245	*G7	R335	*G6
C46	*K4	C261	*E6	C375	*B7	C468	*D6	D350	D6	IC225	H5	Q210	E8	R78	*K2	R246	*E7	R336	*G6
C47	H4	C262	G6	C376	*D7	C469	B5	D351	A6	IC226	*H5	Q211	*F7	R79	*K2	R247	*H7	R337	*E6
C48	K3	C263	*E8	C377	*D7	C470	*C5	D500	D1	IC227	*H5	Q215	E7	R80	*K2	R248	*G8	R338	*G6
C49	J4	C264	*G8	C378	*B7	C471	*A6			IC228	*A5	Q355	*D7	R81	*K2	R249	*E8	R339	*G6
C50	G4	C265	*G7	C379	*B7	C472	*D6	DL200	G7	IC229	*G5	Q359	C7	R82	*J2	R250	*G8	R340	*G6
C51	H4	C266	*G7	C380	*C7	C477	*C8	DL202	E7	IC230	*G7	Q360	D7	R83	*J1	R251	*G7	R341	*G6
C52	G2	C267	*E7	C381	*A7	C478	*D6	DL350	C7	IC231	*G5	Q361	*B7	R84	*J1	R252	*E7	R342	*G6
C53	F2	C268	*E7	C382	*D7	C479	*C7	DL352	A7	IC358	D5	Q362	A8	R85	*J1	R253	*G7	R343	H6
C54	G2	C269	*G7	C383	*B7	C500	*D4			IC360	*D5	Q363	C8	R86	*J1	R254	*E7	R344	H6
C55	F2	C270	*E7	C384	*D7	C501	*E2	E150	*K7	IC361	*E9	Q364	B7	R87	J1	R255	*G7	R345	G6
C56	*B9	C271	*G7	C385	*D7	C502	*C2	E500	*A3	IC362	A5	Q365	A7	R88	J1	R256	*E7	R346	G6
C150	*G9	C272	*G7	C386	D7	C503	*C2			IC363	*B5	Q500	*A8	R89	*J2	R257	*G7	R347	*E6
C151	*F9	C273	*E7	C387	B7	C504	*B3	FL200	H7	IC364	*C5	Q501	*A8	R90	*J2	R258	*E7	R348	G6
C152	*H9	C274	*E7	C388	*C8	C505	*C3	FL201	F7	IC365	*C7			R91	*J1	R259	*G8	R349	G6
C153	*H9	C275	*G7	C389	*A8	C506	*C3	FL350	D7	IC366	*A7	R1	G8	R92	J1	R260	*E8	R350	*F6
C154	*J8	C276	*F7	C390	D7	C507	*C4	FL351	B7	IC367	*D6	R2	G8	R93	G3	R261	*G8	R351	G6
C155	*J8	C277	*F7	C391	B7	C508	C4			IC368	*A6	R3	G8	R94	G3	R262	*E8	R352	F5
C156	*K6	C278	*E7	C392	*C7	C509	D4	IC1	*K2	IC369	*C6	R4	G8	R95	*K2	R263	A8	R353	G6
C157	K6	C279	*G8	C393	*A7	C510	*E3	IC2	E3	IC370	*B6	R5	G8	R96	*J3	R264	G6	R354	H6
C158	J7	C280	*E8	C394	C7	C511	*D2	IC3	E3	IC371	B5	R6	E3	R97	H4	R265	H5	R355	H6
C159	J7	C281	*G7	C395	A7	C512	*D2	IC4	*H1	IC372	*B5	R7	E3	R98	G2	R266	G5	R356	*H5
C160	J5	C282	*E7	C396	C7	C513	C2	IC5	*J9	IC500	B3	R8	E3	R99	K2	R267	H5	R357	*H5
C161	J5	C283	G7	C397	A7	C514	*B4	IC6	*A3	IC501	B3	R9	E3	R100	H2	R268	*A7	R358	*E6
C162	J6	C284	E7	C398	*C7	C515	*B4	IC7	H2	IC502	*C3	R10	*H1	R101	H2	R269	*H6	R359	*E6
C163	J6	C285	G6	C399	*A7	C516	*D1	IC8	*K1	IC503	E2	R11	*J1	R102	*F9	R270	H5	R360	D5
C164	J5	C286	*G6	C400	*A8	C517	*B4	IC9	*K8	IC504	*C2	R12	*J9	R103	*F9	R271	H5	R361	D5
C165	J5	C287	G6	C401	*C8	C518	*C1	IC20	H1	IC505	*C2	R13	*J9	R150	*H9	R272	H5	R362	D5
C166	J7	C288	F6	C402	*C7	C519	*C1	IC21	G1	IC506	D4	R14	*A3	R151	*G9	R273	*G7	R363	D5
C167	*K7	C289	*H6	C403	*C7	C520	*A3	IC22	G1	IC507	C3	R15	*A3	R152	*H9	R274	G7	R364	D5
C200	*F9	C290	*H6	C404	D5	C521	A4	IC23	*G2	IC508	B3	R16	H3	R153	*F9	R275	H6	R365	*C4
C201	E5	C291	*H6	C405	D5	C522	*C3	IC24	J4	IC509	*D1	R17	H3	R154	K6	R276	H5	R366	*C4
C202	*F9	C292	*E6	C406	D6	C523	*A4	IC25	*H4	IC510	B3	R18	H2	R155	*K6	R277	G7	R367	*C4
C203	E8	C293	*E6	C407	D5	C524	A4	IC26	H4	IC511	A3	R19	H2	R156	J7	R278	*A7	R368	*C4
C204	D8	C294	*E6	C408	*A6	C525	*A3	IC27	G4	IC512	G1	R20	H2	R157	K5	R279	*A7	R369	*C8
C205	D8	C295	*G6	C409	C6	C526	*B9	IC28	*J4	IC513	F1	R21	H2	R158	J5	R280	G6	R370	C8
C206	E8	C296	E5	C410	C6	C527	*G1	IC29	H4	IC514	F1	R22	H2	R159	J5	R281	H6	R371	D7
C207	F8	C297	E5	C411	*C6	C528	*B8	IC30	*K4	IC515	A8	R23	*C9	R160	J5	R282	H6	R372	*C8
C208	F8	C298	E6	C412	C6	C529	*B8	IC31	K3	IC516	A8	R24	*C9	R161	J5	R283	*H6	R373	C8
C209	H8	C299	E5	C413	*A7	C530	*B3	IC32	K4	IC517	F1	R25	G1	R162	J5	R284	*H6	R374	B7
C210	F8	C300	G6	C414	*C7	C531	F1	IC33	*K4	IC518	*D1	R26	*K7	R163	J6	R285	E6	R375	*D7
C211	D8	C301	*H5	C415	*A7	C532	G1	IC34	J2	IC519	*E1	R27	*K6	R164	J7	R286	E6	R376	*D7
C212	B8	C302	F6	C416	*C8	C533	*B9	IC35	*K1	IC520	*E2	R28	*K6	R165	*J8	R287	E6	R377	*B7
C213	H8	C303	F6	C417	*A8	C534	*B8	IC36	*K2	IC521	*A8	R29	*K6	R166	*J8	R288	*E6	R378	*B7
C214	F8	C304	F6	C418	*C7	C535	*A8	IC37	J1	IC600	*D4	R30	*C9	R167	F9	R289	*E6	R379	*D7
C215	D8	C305	H6	C419	*A7	C536	*D1	IC38	J4	IC601	*E4	R31	*C9	R200	E5	R290	*H6	R380	D7
C216	B8	C306	E6	C420	C7	C537	*D1	IC39	K2	IC602	*D3	R32	G1	R201	E5	R291	*F7	R381	B7
C217	E8	C307	G6	C421	*E9	C538	*E1	IC40	H1	IC603	*E3	R33	G2	R202	E5	R292	*F7	R382	*B7
C218	*E5	C308	F6	C422	*C6	C539	*D1	IC41	G2			R34	G2	R203	E5	R293	*F7	R383	C7
C219	*D5	C309	*H6	C423	C6	C540	*A8	IC42	G2	L1	F8	R35	G1	R204	F8	R294	*F7	R384	B7
C220	*F8	C310	*E6	C424	*D5	C541	*A8	IC43	G2	L2	G8	R36	J3	R205	*E9	R295	*F7	R385	*D7
C221	E8	C311	F5	C425	B6	C542	*A8	IC44	H2	L3	H8	R37	*B9	R206	E5	R296	*H6	R386	*D7
C222	*A5	C312	*G5	C426	*B7	C600	D4	IC45	G2	L4	D8	R38	F1	R207	D9	R297	*G5	R387	*D7
C223	*G5	C313	*H5	C427	*B7	C601	*D3	IC46	K2	L20	K3	R39	H4	R208	D9	R298	*E5	R388	*D7

R389	*D7	R479	*A7	R715	E6	TP152	*H5		
R390	A8	R480	A7	R716	E6	TP200	*H7		
R391	C8	R481	A6	R717	*E5	TP201	*G7		
R392	*C7	R482	A5	R718	*E5	TP202	*H6		
R393	*A7	R483	A7	R719	H7	TP203	*H5		
R394	*A8	R484	D6	R720	F7	TP300	*F7		
R395	*C8	R485	*D5	R721	*G6	TP301	*E7		
R396	*A8	R486	*D5	R722	*F6	TP302	*E6		
R397	*D7	R487	D6	R723	D8	TP303	*E5		
R398	*C7	R488	D6	R724	G8	TP400	*D7		
R399	*A7	R489	*A6	R725	*K1	TP401	*C7		
R400	*C7	R490	*B6	R726	*K1	TP402	*D6		
R401	*A7	R491	*A5	R727	*K1	TP403	*D5		
R402	*C7	R492	*A6	R728	*K1	TP500	*B7		
R403	*A7	R493	*A6	R729	*K8	TP501	*A7		
R404	*C7	R494	B6	R730	*K8	TP502	*A6		
R405	*A7	R495	B6	R731	*K8	TP503	*A5		
R406	*C8	R496	B6	R732	*K8				
R407	*A8	R497	*B6	R800	*B6	X20	*F2		
R408	*C8	R498	*B6	R801	*B6	X21	K1		
R409	*A8	R499	*B6	R802	*B6				
R410	*D6	R500	*B3	R803	B6				
R411	*C8	R501	*B9	R804	B6				
R412	*D6	R502	*B3	R805	B6				
R413	*A8	R503	E1	R806	B6				
R414	C6	R504	E1	R807	A6				
R415	D5	R505	*B3	R808	A6				
R416	C5	R506	*E1	R809	A6				
R417	D5	R507	*D2	R810	A6				
R418	C6	R508	*D2	R811	*A5				
R419	D6	R509	*C3	R812	*A5				
R420	D5	R510	*B2	R813	D7				
R421	D5	R511	*B2	R814	B7				
R422	D5	R512	*D2	R815	*C6				
R423	*C7	R513	*D2	R816	*B6				
R424	C7	R514	*D2						
R425	D6	R515	*D2	RB20	H2				
R426	D5	R516	*D2	RB21	H1				
R427	C7	R517	*D2	RB22	G1				
R428	D6	R518	*A2	RB23	*G1				
R429	*A6	R519	D1	RB24	*H1				
R430	*A6	R520	*B4	RB25	*G1				
R431	A6	R521	*A4	RB26	*G1				
R432	A6	R522	*B4	RB27	F2				
R433	A6	R523	*A4	RB28	G3				
R434	*D6	R524	*F1	RB29	*H1				
R435	*D6	R525	*F1	RB30	F3				
R436	C6	R526	*G1	RB31	*J2				
R437	*D6	R527	*A8	RB32	J3				
R438	*B6	R528	*A8	RB33	J3				
R439	*C6	R529	A9	RB34	K4				
R440	C6	R530	A4	RB35	K4				
R441	*B7	R531	A4	RB36	K4				
R442	*B7	R532	G4	RB37	K4				
R443	*B7	R533	*C3	RB38	*K4				
R444	*B7	R534	*D1	RB39	K2				
R445	*B7	R535	D1	RB40	K2				
R446	C4	R536	*E2	RB41	*J2				
R447	C4	R537	*E2	RB42	K3				
R448	*C5	R538	*B3	RB43	K3				
R449	B5	R539	D1	RB44	*K3				
R450	D7	R540	*D1	RB45	*K3				
R451	*D5	R541	*D2	RB46	H2				
R452	*B7	R542	*E1	RB47	*F1				
R453	*C6	R543	*A8	RB150	*J7				
R454	C7	R544	A8	RB151	J6				
R455	*C6	R545	*A8	RB152	J7				
R456	C8	R546	D1	RB200	*F2				
R457	*C8	R547	D1	RB201	*E1				
R458	A7	R548	D1	RB300	*B2				
R459	A7	R549	D1	RB500	E1				
R460	*C6	R600	*E4	RB501	E1				
R461	A8	R601	*F4	RB502	*C4				
R462	*D6	R602	*E3	RB503	*C4				
R463	*C6	R603	*F2	RB504	B4				
R464	*C6	R700	*F6	RB505	B4				
R465	*C6	R701	*F6	RB506	*B4				
R466	*C6	R702	F6	RB507	*B4				
R467	C6	R703	F6	RB600	*E4				
R468	C6	R704	F6	RB601	*F3				
R469	C6	R705	*F6	RB602	*E3				
R470	A6	R706	*F6	RB603	*F3				
R471	A5	R707	*F6						
R472	A5	R708	*F6	S20	K1				
R473	A5	R709	F6						
R474	C6	R710	F6	TP20	*J3				
R475	D6	R711	F6	TP21	*G3				
R476	A5	R712	F6	TP22	*K3				
R477	A5	R713	E6	TP150	*J7				
R478	A5	R714	E6	TP151	*K7				

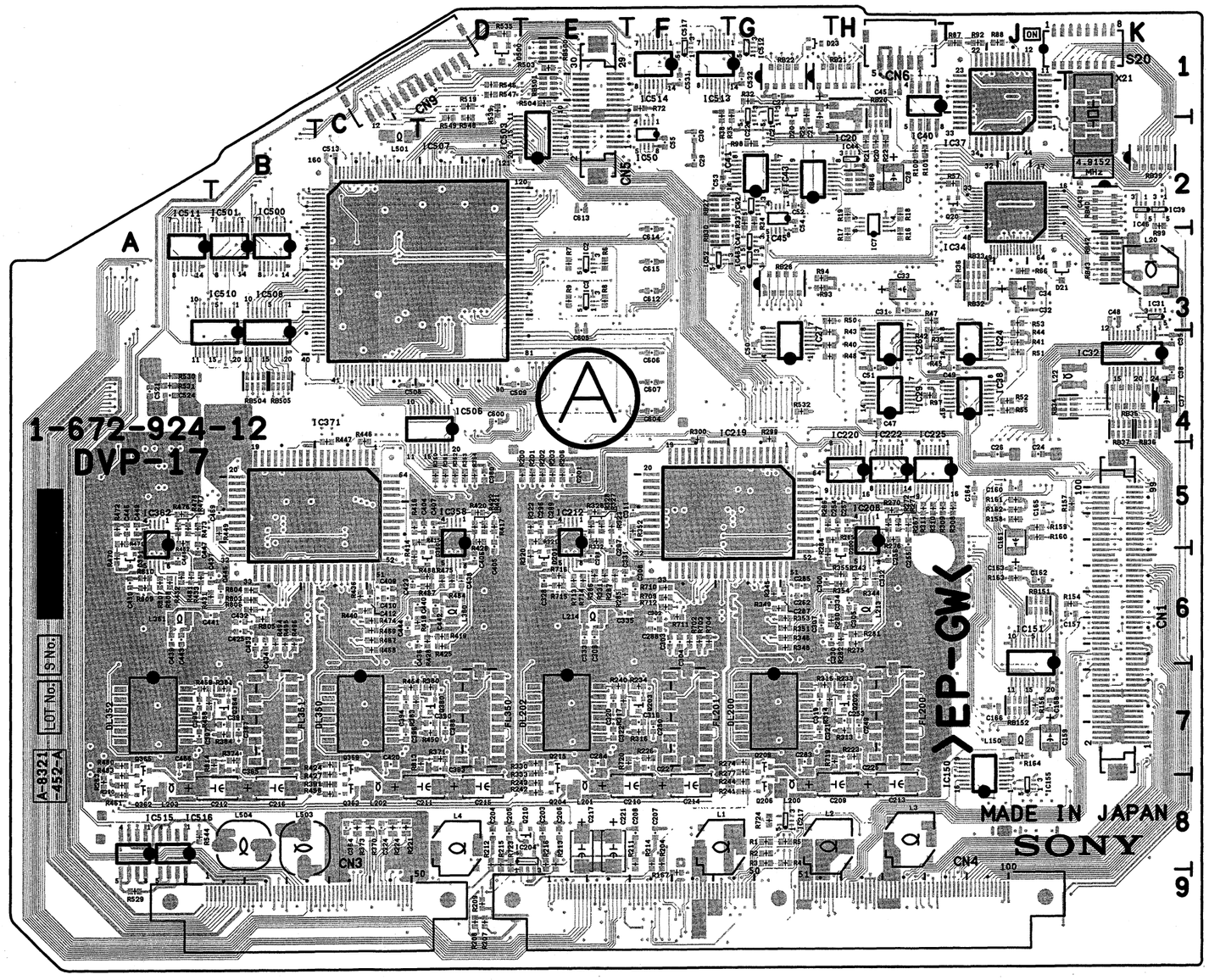

Components locations list ; previous page

DVP-17 -A SIDE-
SUFFIX:-12

DVP-17 (1-672-924-11)

*:B SIDE

C1	*F9	C225	H7	C315	*H7	C429	*A6	C603	*D4	IC151	J6	L204	*H8	R63	*J2	R232	*F7	R322	E5
C2	*G8	C226	*C8	C316	F7	C430	*A6	C604	F4	IC152	*J5	L205	*F8	R64	*G3	R233	H7	R323	E5
C3	*G8	C227	F7	C317	*G7	C431	*A6	C605	E3	IC153	*J7	L206	*D8	R65	*K1	R234	F7	R324	*H6
C4	*G9	C228	*F5	C318	*E7	C432	B6	C606	F4	IC154	*J7	L207	*B8	R66	J3	R235	*H7	R325	*E8
C5	*G8	C229	*G5	C319	G7	C433	B6	C607	F4	IC155	J8	L208	*E8	R67	*K3	R236	*H7	R326	E5
C6	*G8	C230	*H7	C320	E7	C434	B6	C608	*D3	IC200	*F9	L209	*E5	R68	*J2	R237	*H7	R327	E5
C7	*H8	C231	*F7	C321	G7	C435	*B6	C609	*D2	IC201	*F9	L210	*D5	R69	*K2	R238	*H7	R328	E5
C8	*H8	C232	*A5	C322	E7	C436	C6	C610	*D2	IC202	*E5	L211	*F8	R70	*J2	R239	*H7	R329	*E7
C9	*D8	C233	*H7	C323	*G7	C437	A6	C611	*D3	IC203	*D9	L212	*E8	R71	*G1	R240	E7	R330	E7
C10	*D8	C234	*H7	C324	*E7	C438	D6	C612	F3	IC204	E8	L213	H6	R72	F1	R241	G8	R331	E6
C11	*K2	C235	*H7	C325	*E7	C439	A6	C613	E2	IC205	*D8	L214	E6	R74	*K2	R242	E8	R332	E5
C20	*K3	C236	*F7	C326	*G7	C440	C6	C614	F2	IC206	*E8	L360	D6	R75	*K2	R243	E8	R333	E7
C21	G1	C237	*H7	C327	*F6	C441	A6	C615	F3	IC207	*F8	L361	A6	R76	*K2	R244	G8	R334	*G6
C22	*K3	C238	*F7	C328	E6	C442	D6			IC208	H5	L500	*B4	R77	*K2	R245	*G7	R335	*G6
C23	*K3	C239	*H7	C329	*E5	C443	A6	CL600	*C4	IC209	*G6	L501	C2	R78	*K2	R246	*E7	R336	*G6
C24	J5	C240	*H7	C330	G6	C444	C6			IC210	*A5	L503	B8	R79	*K2	R247	*H7	R337	*E6
C25	*J5	C241	*F7	C331	E6	C445	B6	CN1	K6	IC211	*F5	L504	B8	R80	*K2	R248	*G8	R338	*G6
C26	J5	C242	*F7	C332	H6	C446	A5	CN2	*F5	IC212	E5			R81	*K2	R249	*E8	R339	*G6
C27	G1	C243	*G7	C333	E6	C447	A5	CN3	B9	IC213	*F6	Q20	J2	R82	*J2	R250	*G8	R340	*G6
C28	H2	C244	*E7	C334	G6	C448	A6	CN4	G9	IC214	*E7	Q200	*E9	R83	*J1	R251	*G7	R341	*G6
C29	F2	C245	*H7	C335	E6	C449	A5	CN5	E1	IC215	*H6	Q201	*E9	R84	*J1	R252	*E7	R342	*G6
C30	F2	C246	*F7	C360	D5	C450	A6	CN6	H1	IC216	*E6	Q202	H7	R85	*J1	R253	*G7	R343	H6
C31	H3	C247	*G7	C361	*B5	C451	*A5	CN7	*J8	IC217	G8	Q203	F7	R86	*J1	R254	*E7	R344	H6
C32	J3	C248	*E7	C362	*C8	C455	*C7	CN8	*G4	IC219	F5	Q204	E8	R87	J1	R255	*G7	R345	G6
C33	H3	C249	H7	C363	D7	C456	*C7	CN9	C1	IC220	H5	Q205	*H7	R88	J1	R256	*E7	R346	G6
C34	J3	C250	F7	C364	C8	C457	*C7	CN10	*K5	IC221	*H5	Q206	G8	R89	*J2	R257	*G7	R347	*E6
C35	K4	C251	*G8	C365	B7	C458	*C7	CN22	*C5	IC222	H5	Q207	*A8	R90	*J2	R258	*E7	R348	G6
C36	*K4	C252	*E8	C366	*B5	C459	*C7			IC223	*H5	Q208	*A7	R91	*J1	R259	*G8	R349	G6
C37	K4	C253	H7	C367	*B5	C460	*A7	CP500	*D2	IC224	*H5	Q209	G7	R92	J1	R260	*E8	R350	*F6
C38	K4	C254	H5	C368	*D7	C461	*A7	CP501	*D1	IC225	H5	Q210	E8	R93	G3	R261	*G8	R351	G6
C39	*J2	C255	H5	C369	*B7	C462	*A7			IC226	*H5	Q211	*F7	R94	G3	R262	*E8	R352	F5
C40	*J2	C256	H6	C370	*D7	C463	*A7	D20	G1	IC227	*H5	Q215	E7	R95	*K2	R263	A8	R353	G6
C41	*K1	C257	H5	C371	*B7	C464	*A7	D21	J3	IC228	*A5	Q355	*D7	R96	*J3	R264	G6	R354	H6
C42	*K2	C258	*G8	C372	*D7	C465	*A7	D22	*J2	IC229	*G5	Q359	C7	R97	H4	R265	H5	R355	H6
C43	K2	C259	*G7	C373	*B7	C466	A7	D23	G1	IC230	*G7	Q360	D7	R98	G2	R266	G5	R356	*H5
C44	*J1	C260	*H6	C374	*D7	C467	*D6	D24	*K2	IC231	*G5	Q361	*B7	R99	K2	R267	H5	R357	*H5
C45	H1	C261	*E6	C375	*B7	C468	*D6	D200	H6	IC358	D5	Q362	A8	R100	H2	R268	*A7	R358	*E6
C46	*K4	C262	G6	C376	*D7	C469	B5	D201	E6	IC360	*D5	Q363	C8	R101	H2	R269	*H6	R359	*E6
C47	H4	C263	*E8	C377	*D7	C470	*C5	D350	D6	IC361	*E9	Q364	B7	R102	*F9	R270	H5	R360	D5
C48	K3	C264	*G8	C378	*B7	C471	*A6	D351	A6	IC362	A5	Q365	A7	R103	*F9	R271	H5	R361	D5
C49	J4	C265	*G7	C379	*B7	C472	*D6	D500	D1	IC363	*B5	Q500	*A8	R150	*H9	R272	H5	R362	D5
C50	G4	C266	*G7	C380	*C7	C477	*C8			IC364	*C5	Q501	*A8	R151	*G9	R273	*G7	R363	D5
C51	H4	C267	*E7	C381	*A7	C478	*D6	DL200	G7	IC365	*C7			R152	*H9	R274	G7	R364	D5
C52	G2	C268	*E7	C382	*D7	C479	*C7	DL202	E7	IC366	*A7	R1	G8	R153	*F9	R275	H6	R365	*C4
C53	F2	C269	*G7	C383	*B7	C500	*D4	DL350	C7	IC367	*D6	R2	G8	R154	K6	R276	H5	R366	*C4
C54	G2	C270	*E7	C384	*D7	C501	*E2	DL352	A7	IC368	*A6	R3	G8	R155	*K6	R277	G7	R367	*C4
C55	F2	C271	*G7	C385	*D7	C502	*C2			IC369	*C6	R4	G8	R156	J7	R278	*A7	R368	*C4
C150	*G9	C272	*G7	C386	D7	C503	*C2	E150	*K7	IC370	*B6	R5	G8	R157	K5	R279	*A7	R369	*C8
C151	*F9	C273	*E7	C387	B7	C504	*B3	E500	*A3	IC371	B5	R20	H2	R158	J5	R280	G6	R370	C8
C152	*H9	C274	*E7	C388	*C8	C505	*C3			IC372	*B5	R21	H2	R159	J5	R281	H6	R371	D7
C153	*H9	C275	*G7	C389	*A8	C506	*C3	FL200	H7	IC500	B3	R22	H2	R160	J5	R282	H6	R372	*C8
C154	*J8	C276	*F7	C390	D7	C507	*C4	FL201	F7	IC501	B3	R23	*C9	R161	J5	R283	*H6	R373	C8
C155	*J8	C277	*F7	C391	B7	C508	C4	FL350	D7	IC502	*C3	R24	*C9	R162	J5	R284	*H6	R374	B7
C156	*K6	C278	*E7	C392	*C7	C509	D4	FL351	B7	IC503	E2	R25	G1	R163	J6	R285	E6	R375	*D7
C157	K6	C279	*G8	C393	*A7	C510	*E3			IC504	*C2	R26	*K7	R164	J7	R286	E6	R376	*D7
C158	J7	C280	*E8	C394	C7	C511	*D2	IC1	*K2	IC505	*C2	R27	*K6	R165	*J8	R287	E6	R377	*B7
C159	J7	C281	*G7	C395	A7	C512	*D2	IC20	H1	IC506	D4	R28	*K6	R166	*J8	R288	*E6	R378	*B7
C160	J5	C282	*E7	C396	C7	C513	C2	IC21	G1	IC507	C3	R29	*K6	R167	F9	R289	*E6	R379	*D7
C161	J5	C283	G7	C397	A7	C514	*B4	IC22	G1	IC508	B3	R30	*C9	R200	E5	R290	*H6	R380	D7
C162	J6	C284	E7	C398	*C7	C515	*B4	IC23	*G2	IC509	*D1	R31	*B9	R201	E5	R291	*F7	R381	B7
C163	J6	C285	G6	C399	*A7	C516	*D1	IC24	J4	IC510	B3	R32	G1	R202	E5	R292	*F7	R382	*B7
C164	J5	C286	*G6	C400	*A8	C517	*B4	IC25	*H4	IC511	A3	R33	G2	R203	E5	R293	*F7	R383	C7
C165	J5	C287	G6	C401	*C8	C518	*C1	IC26	H4	IC512	G1	R34	G2	R204	F8	R294	*F7	R384	B7
C166	J7	C288	F6	C402	*C7	C519	*C1	IC27	G4	IC513	F1	R35	G1	R205	*E9	R295	*F7	R385	*D7
C167	*K7	C289	*H6	C403	*C7	C520	*A3	IC28	*J4	IC514	F1	R36	J3	R206	E5	R296	*H6	R386	*D7
C200	*F9	C290	*H6	C404	D5	C521	A4	IC29	H4	IC515	A8	R38	F1	R207	D9	R297	*G5	R387	*D7
C201	E5	C291	*H6	C405	D5	C522	*C3	IC30	*K4	IC516	A8	R39	H4	R208	D9	R298	*E5	R388	*D7
C202	*F9	C292	*E6	C406	D6	C523	*A4	IC31	K3	IC517	F1	R40	G4	R209	D9	R299	G4	R389	*D7
C203	E8	C293	*E6	C407	D5	C524	A4	IC32	K4	IC518	*D1	R41	J4	R210	*E9	R300	F4	R390	A8
C204	D8	C294	*E6	C408	*A6	C525	*A3	IC33	*K4	IC519	*E1	R42	H3	R211	F8	R301	*G5	R391	C8
C205	D8	C295	*G6	C409	C6	C526	*B9	IC34	J2	IC520	*E2	R43	G4	R212	D8	R302	*F7	R392	*C7
C206	E8	C296	E5	C410	C6	C527	*G1	IC35	*K1	IC521	*A8	R44	J4	R213	E8	R303	*H5	R393	*A7
C207	F8	C297	E5	C411	*C6	C528	*B8	IC36	*K2	IC600	*D4	R45	H4	R214	F8	R304	*H5	R394	*A8
C208	F8	C298	E6	C412	C6	C529	*B8	IC37	J1	IC601	*E4	R46	*K5	R215	D8	R305	*H5	R395	*C8
C209	H8	C299	E5	C413	*A7	C530	*B3	IC38	J4	IC602	*D3	R47	H3	R216	E8	R306	*H5	R396	*A8
C210	F8	C300	G6	C414	*C7	C531	F1	IC39	K2	IC603	*E3	R48	G4	R217	*F4	R307	*H5	R397	*D7
C211	D8	C301	*H5	C415	*A7	C532	G1	IC40	H1			R49	*C9	R218	*F4	R308	J5	R398	*C7
C212	B8	C302	F6	C416	*C8	C533	*B9	IC41	G2	L1	F8	R50	G3	R219	*F4	R309	H5	R399	*A7
C213	H8	C303	F6	C417	*A8	C534	*B8	IC42	G2	L2	G8	R51	J4	R220	*F4	R310	H5	R400	*C7
C214	F8	C304	F6	C418	*C7	C535	*A8	IC43	G2	L3	H8	R52	J4	R221	C8	R311	H5	R401	*A7
C215	D8	C305	H6	C419	*A7	C536	*D1	IC44	H2	L4	D8	R53	J3	R222	*C8	R312	*H5	R402	*C7
C216	B8	C306	E6	C420	C7	C537	*D1	IC45	G2	L20	K3	R54	*C9	R223	H7	R313	H7	R403	*A7
C217	E8	C307	G6	C421	*E9	C538	*E1	IC46	K2	L21	*J5	R55	J4	R224	C8	R314	G7	R404	*C7
C218	*E5	C308	F6	C422	*C6	C539	*D1	IC47	G3	L22	K4	R56	*K5	R225	*C8	R315	G7	R405	*A7
C219	*D5	C309	*H6	C423	C6	C540	*A8	IC48	G3	L23	*J2	R57	J2	R226	F7	R316	F7	R406	*C8
C220	*F8	C310	*E6	C424	*D5	C541	*A8	IC49	*E1	L150	J7	R58	*K4	R227	*H7	R317	E7	R407	*A8
C221	E8	C311	F5	C425	B6	C542	*A8	IC50	F2	L200	G8	R59	*K4	R228	*H7	R318	*E8	R408	*C8
C222	*A5	C312	*G5	C426	*B7	C600	D4	IC51	*H1	L201	E8	R60	*J3	R229	*F7	R319	*G8	R409	*A8
C223	*G5	C313	*H5	C427	*B7	C601	*D3	IC52	F3	L202	C8	R61	*J3	R230	*F7	R320	E6	R410	*D6
C224	C8	C314	*F7	C428	*D6	C602	*D4	IC150	J7	L203	A8	R62	*J3	R231	*H7	R321	E5	R411	*C8

R412	*D6	R502	*B3	R813	D7				
R413	*A8	R503	E1	R814	B7				
R414	C6	R504	E1	R815	*C6				
R415	D5	R505	*B3	R816	*B6				
R416	C5	R506	*E1						
R417	D5	R507	*D2	RB20	H2				
R418	C6	R508	*D2	RB21	H1				
R419	D6	R509	*C3	RB22	G1				
R420	D5	R510	*B2	RB23	*G1				
R421	D5	R511	*B2	RB24	*H1				
R422	D5	R512	*D2	RB25	*G1				
R423	*C7	R513	*D2	RB26	*G1				
R424	C7	R514	*D2	RB27	F2				
R425	D6	R515	*D2	RB28	G3				
R426	D5	R516	*D2	RB29	*H1				
R427	C7	R517	*D2	RB30	F3				
R428	D6	R518	*A2	RB31	*J2				
R429	*A6	R519	D1	RB32	J3				
R430	*A6	R520	*B4	RB33	J3				
R431	A6	R521	*A4	RB34	K4				
R432	A6	R522	*B4	RB35	K4				
R433	A6	R523	*A4	RB36	K4				
R434	*D6	R524	*F1	RB37	K4				
R435	*D6	R525	*F1	RB38	*K4				
R436	C6	R526	*G1	RB39	K2				
R437	*D6	R527	*A8	RB40	K2				
R438	*B6	R528	*A8	RB41	*J2				
R439	*C6	R529	A9	RB42	K3				
R440	C6	R530	A4	RB43	K3				
R441	*B7	R531	A4	RB44	*K3				
R442	*B7	R532	G4	RB45	*K3				
R443	*B7	R533	*C3	RB46	H2				
R444	*B7	R534	*D1	RB47	*F1				
R445	*B7	R535	D1	RB150	*J7				
R446	C4	R536	*E2	RB151	J6				
R447	C4	R537	*E2	RB152	J7				
R448	*C5	R538	*B3	RB200	*F2				
R449	B5	R539	D1	RB201	*E1				
R450	D7	R540	*D1	RB300	*B2				
R451	*D5	R541	*D2	RB500	E1				
R452	*B7	R542	*E1	RB501	E1				
R453	*C6	R543	*A8	RB502	*C4				
R454	C7	R544	A8	RB503	*C4				
R455	*C6	R545	*A8	RB504	B4				
R456	C8	R546	D1	RB505	B4				
R457	*C8	R547	D1	RB506	*B4				
R458	A7	R548	D1	RB507	*B4				
R459	A7	R549	D1	RB600	*E4				
R460	*C6	R600	*E4	RB601	*F3				
R461	A8	R601	*F4	RB602	*E3				
R462	*D6	R602	*E3	RB603	*F3				
R463	*C6	R603	*F2						
R464	*C6	R700	*F6	S20	K1				
R465	*C6	R701	*F6						
R466	*C6	R702	F6	TP20	*J3				
R467	C6	R703	F6	TP21	*G3				
R468	C6	R704	F6	TP22	*K3				
R469	C6	R705	*F6	TP150	*J7				
R470	A6	R706	*F6	TP151	*K7				
R471	A5	R707	*F6	TP152	*H5				
R472	A5	R708	*F6	TP200	*H7				
R473	A5	R709	F6	TP201	*G7				
R474	C6	R710	F6	TP202	*H6				
R475	D6	R711	F6	TP203	*H5				
R476	A5	R712	F6	TP300	*F7				
R477	A5	R713	E6	TP301	*E7				
R478	A5	R714	E6	TP302	*E6				
R479	*A7	R715	E6	TP303	*E5				
R480	A7	R716	E6	TP400	*D7				
R481	A6	R717	*E5	TP401	*C7				
R482	A5	R718	*E5	TP402	*D6				
R483	A7	R719	H7	TP403	*D5				
R484	D6	R720	F7	TP500	*B7				
R485	*D5	R721	*G6	TP501	*A7				
R486	*D5	R722	*F6	TP502	*A6				
R487	D6	R723	D8	TP503	*A5				
R488	D6	R724	G8						
R489	*A6	R800	*B6	X20	*F2				
R490	*B6	R801	*B6	X21	K1				
R491	*A5	R802	*B6						
R492	*A6	R803	B6						
R493	*A6	R804	B6						
R494	B6	R805	B6						
R495	B6	R806	B6						
R496	B6	R807	A6						
R497	*B6	R808	A6						
R498	*B6	R809	A6						
R499	*B6	R810	A6						
R500	*B3	R811	*A5						
R501	*B9	R812	*A5						

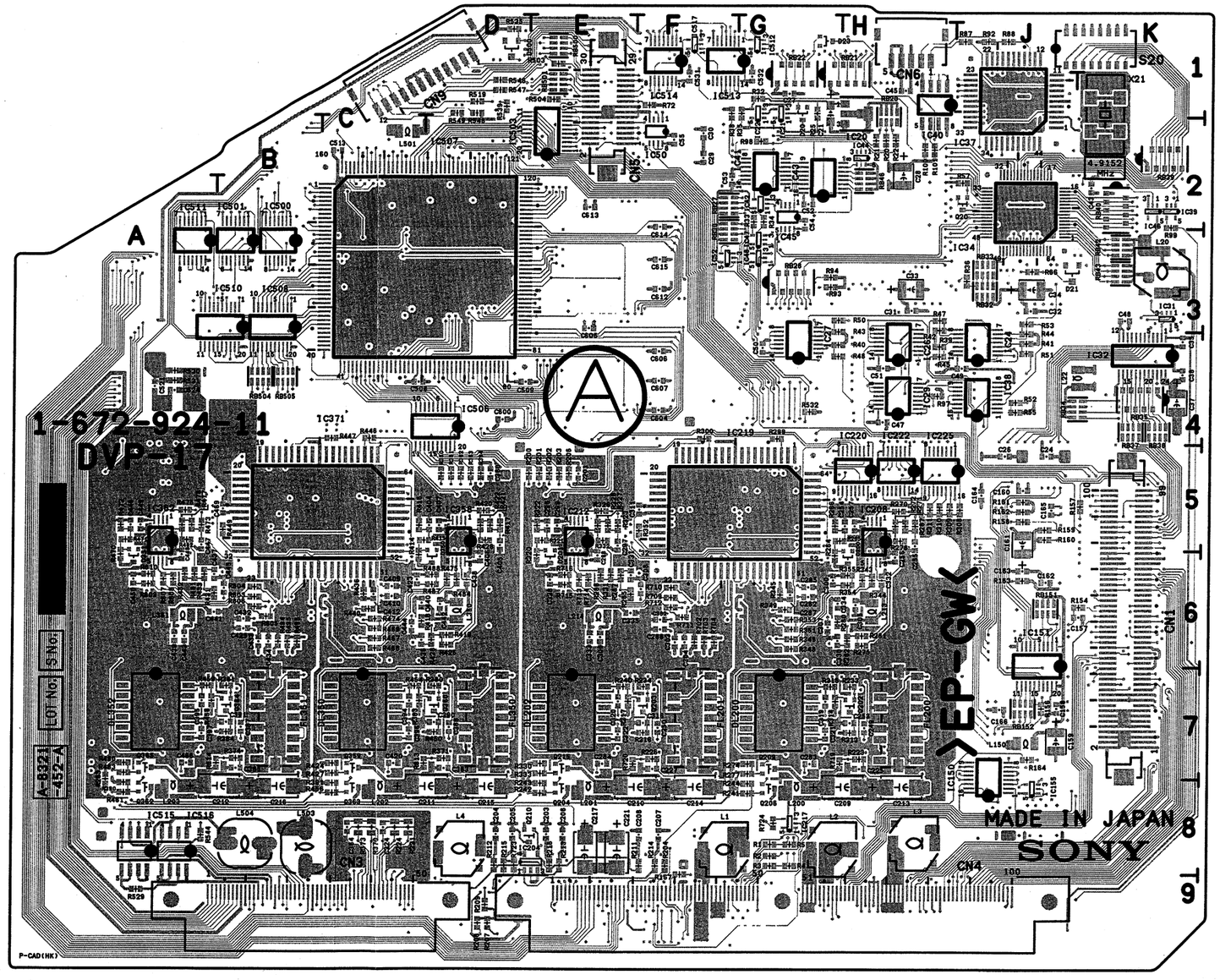

Components locations list ; previous page

DVP-17 -A SIDE-
SUFFIX:-11

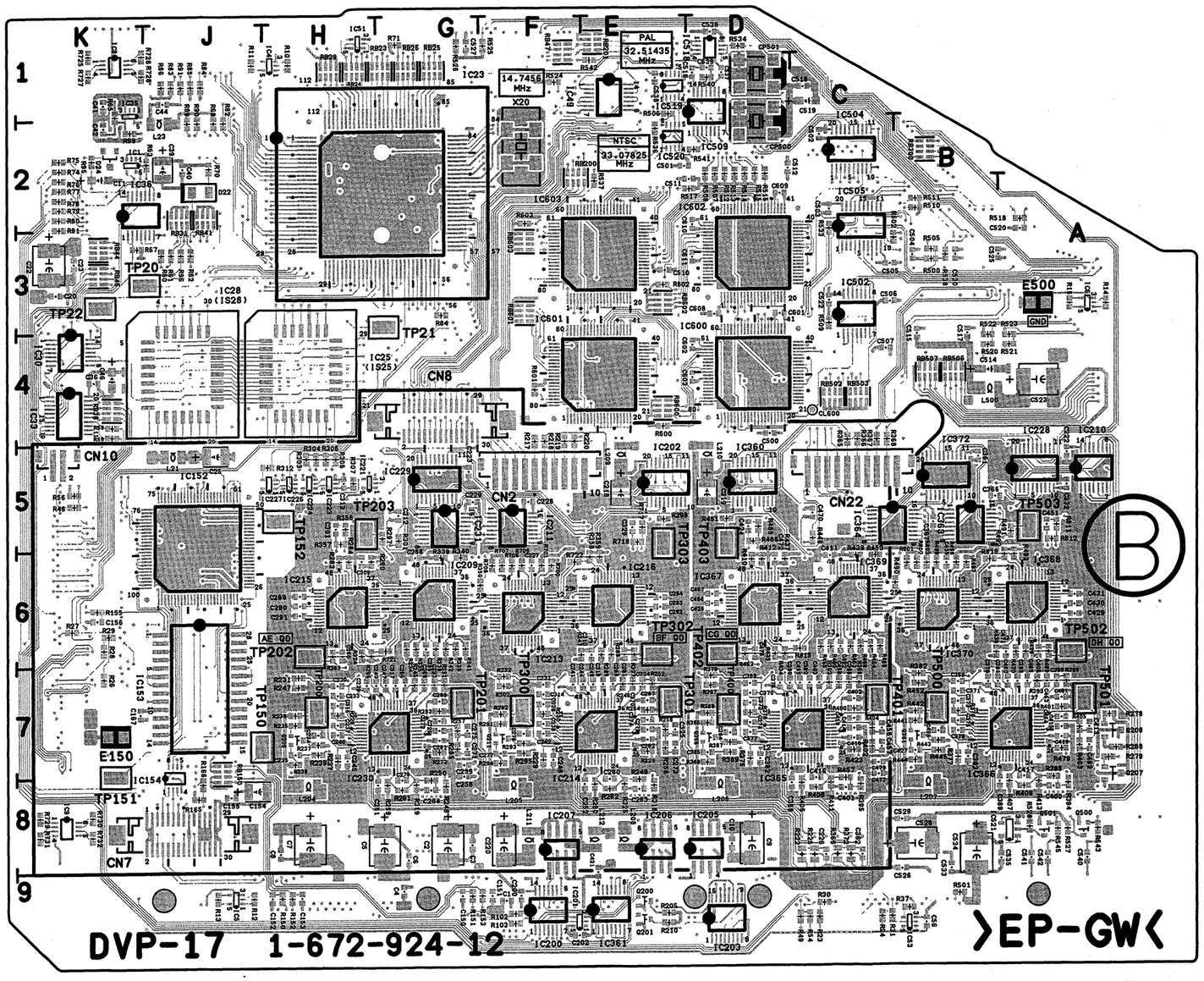

DVP-17 -B SIDE-
SUFFIX:-12

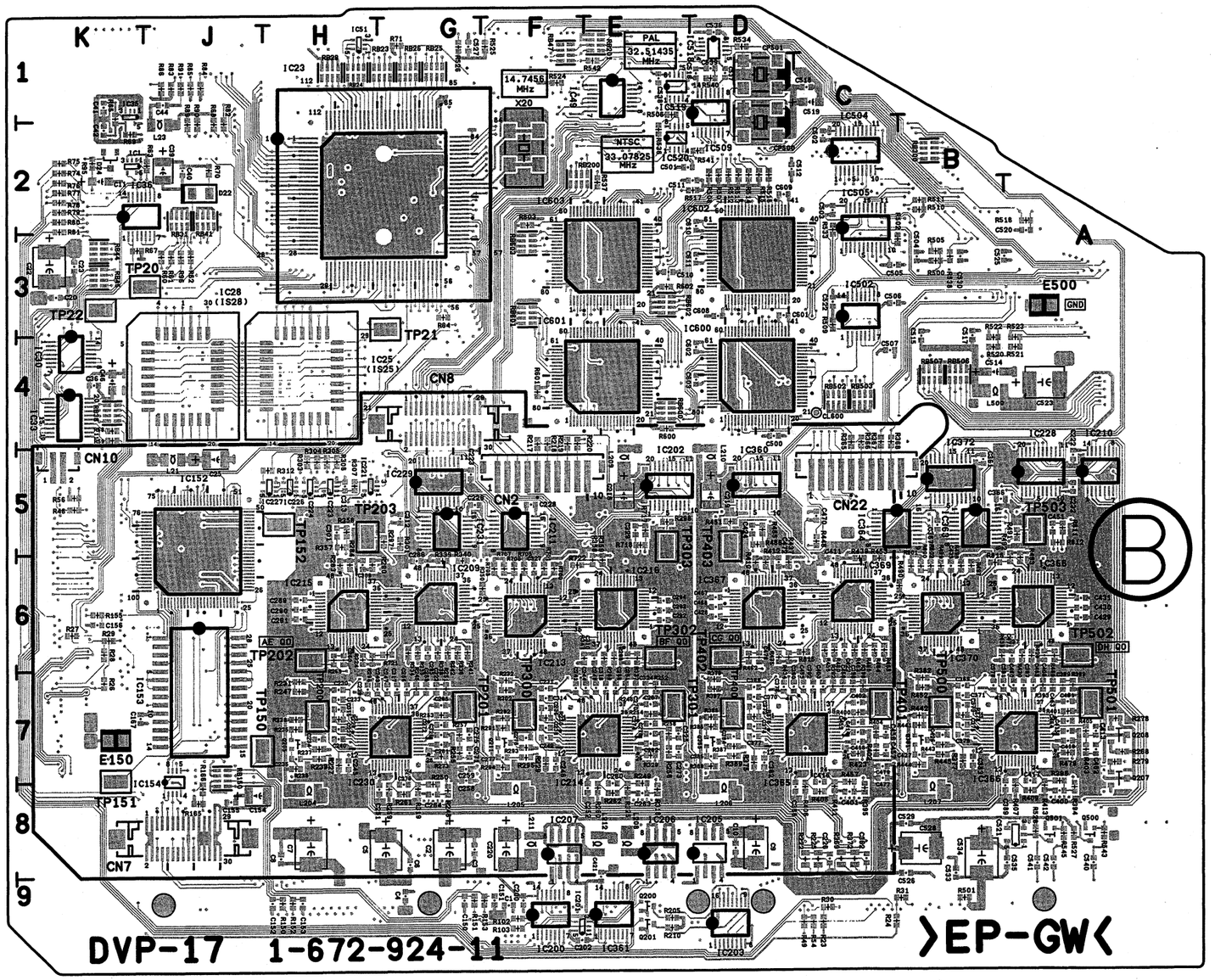

DVP-17 -B SIDE-
SUFFIX:-11

DVP-14 (1-672-925-11)
---

*:B SIDE

C100	*K8	C326	H1	C719	*E5	FL200	*L4
C101	J8	C327	*F1	C720	*D5	FL201	*L4
C102	*J8	C328	*F2	C721	*C5	FL202	L8
C103	K9	C329	*F2	C722	*C4	FL203	L9
C104	K9	C400	*F1	C723	*C3		
C105	K8	C401	*G2	C724	*B2	IC100	L8
C106	K9	C402	*J2	C725	*B5	IC101	J8
C107	K9	C403	*J1	C726	*B3	IC102	J8
C108	K9	C404	K1	C727	*B6	IC103	K8
C109	K8	C405	*J2	C728	*B6	IC104	K8
C110	*H8	C406	*K3	C729	*B5	IC105	H7
C111	J9	C407	*J3	C730	*A5	IC106	K7
C112	*K8	C408	*G3	C731	*A6	IC107	K8
C113	J9	C409	F3	C732	*A6	IC108	K7
C114	*K8	C410	L3	C733	*A7	IC200	K5
C115	J9	C411	*K3	C734	*B7	IC201	L5
C116	J9	C412	*J3	C735	*B8	IC202	K5
C117	*H8	C413	*G3	C736	*B7	IC203	K6
C118	*H8	C500	*E6	C737	*B9	IC204	K5
C119	*H8	C501	*E6	C738	*B8	IC205	J5
C120	*J8	C502	*E6			IC206	K4
C121	*J7	C503	*E7	CL101	J6	IC207	K5
C122	*J7	C504	*E7	CL102	G8	IC208	J6
C123	*H7	C505	*G6	CL103	G7	IC209	L9
C124	*H7	C506	*F5	CL104	G7	IC210	H6
C125	*H7	C507	*F7	CL105	G7	IC211	K6
C126	*J7	C508	*F7	CL106	G7	IC212	H6
C127	*J7	C509	*E8	CL107	G7	IC300	L4
C128	*K7	C510	*E8	CL108	G7	IC301	L4
C129	*K7	C511	*E7	CL109	G7	IC302	K4
C130	*K7	C512	*E7	CL110	G7	IC303	L2
C131	*K7	C513	*E6	CL111	G7	IC304	K3
C132	L7	C514	*E5	CL200	L6	IC305	J4
C133	L8	C515	*G7	CL201	L6	IC306	H4
C134	*L8	C516	*G7	CL202	L5	IC307	J3
C135	L7	C517	*G6	CL203	L6	IC308	K4
C136	L7	C518	*G5	CL204	L5	IC309	K3
C137	*L8	C519	*F5	CL205	L5	IC310	J1
C138	L8	C520	*F5	CL206	L5	IC311	J2
C200	*K5	C521	*E5	CL207	L5	IC312	H2
C201	*L5	C522	*E5	CL208	L6	IC313	F2
C202	*L5	C523	*F4	CL209	L6	IC314	F1
C203	*K4	C524	*F4	CL210	L6	IC400	*G1
C204	L4	C525	*E7	CL211	L6	IC401	*H1
C205	*K5	C526	*E7	CL300	K2	IC402	*K1
C206	L5	C527	*D8	CL301	L3	IC403	*J3
C207	L5	C528	*C7	CL302	L2	IC404	*F3
C208	*J5	C529	*D7	CL303	J2	IC405	*L3
C209	*K6	C530	*C6	CL304	J2	IC406	*H3
C210	*K4	C531	*D6	CL305	J2	IC500	F6
C211	*J4	C532	*C5	CL306	K2	IC501	F5
C212	K9	C600	*F9	CL307	J2	IC503	C8
C213	L9	C601	*G8	CL308	H5	IC504	C6
C214	*H6	C602	*F8	CL309	H5	IC505	C5
C215	*K6	C603	*F9	CL310	H5	IC600	G9
C216	*H6	C604	*D9	CL311	J5	IC601	D9
C217	*J6	C605	*E8	CL312	J5	IC602	E9
C218	L9	C606	*D8	CL313	K2	IC603	C9
C219	L9	C607	*D9	CL314	F1	IC604	H9
C220	*H6	C608	*E9	CL315	F1	IC700	E1
C221	*L9	C609	*F8	CL500	E5	IC701	E1
C222	*L9	C610	*E8	CL501	F5	IC702	E1
C223	*J6	C611	*E9	CL502	F8	IC703	D3
C224	*K5	C612	*C9	CL503	E5	IC704	B3
C300	L3	C613	*C8	CL700	D2	IC705	B4
C301	*L3	C614	*C8	CL701	D1	IC707	*B3
C302	K3	C615	*C9	CL702	D2	IC708	*B4
C303	K1	C616	*G9	CL703	D1	IC709	A6
C304	K2	C617	*H8	CL704	C2	IC710	B8
C305	L2	C618	*G8	CL705	C2	IC711	B9
C306	L1	C619	*G9	CL706	C7		
C307	K3	C700	D1	CL707	C7	L101	J8
C308	H5	C701	*E1	CL708	C2	L102	J7
C309	*H4	C702	D1	CL709	B2	L103	J7
C310	*K4	C703	*A3	CL710	F2	L104	J6
C311	J1	C704	*A4			L105	L8
C312	J2	C705	*A4	CN1	*L6	L200	J5
C313	J3	C706	*A5	CN2	*C1	L201	H6
C314	*J4	C707	*E2	CN5	*F1	L202	J6
C315	*F1	C708	*D2			L300	F2
C316	G1	C709	*C2	CP101	*K8	L700	E1
C317	H1	C710	*C2			L701	D1
C318	H1	C711	B2	E101	H8		
C319	H1	C712	*C3	E300	K1	Q200	*L9
C320	*F2	C713	*C4	E500	G5	Q201	*L9
C321	G2	C714	*C4	E700	B2		
C322	G3	C715	*E2			R100	L7
C323	H3	C716	*E3	FB101	J9	R101	*J8
C324	*J3	C717	*E3			R102	K8
C325	H1	C718	*E4			R103	K9

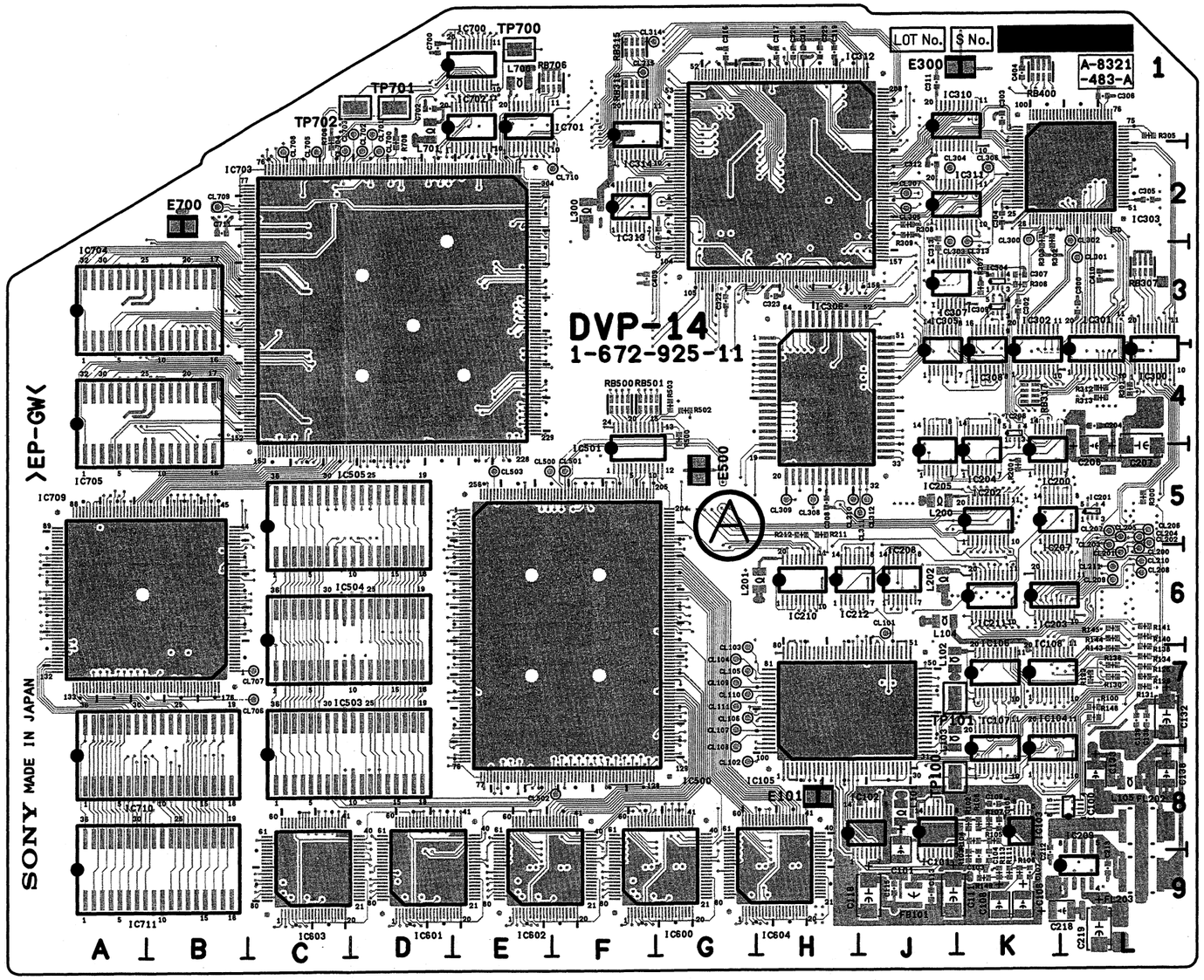

DVP-14 -A SIDE-
SUFFIX:-11

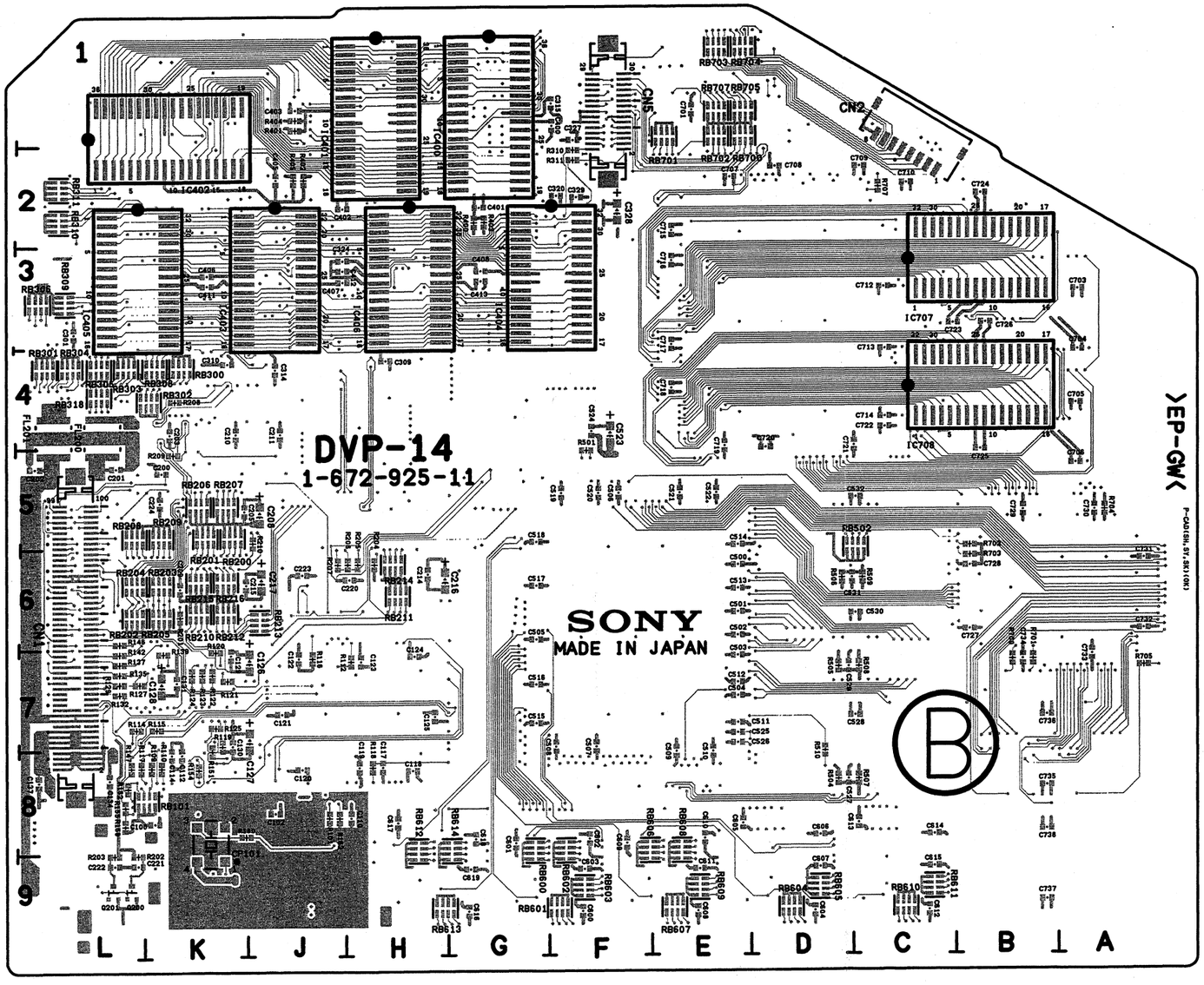

DVP-14 -B SIDE-
SUFFIX:-11

R104	K8	R505	*D7
R105	K8	R506	*D6
R106	K8	R507	*C8
R107	K8	R508	*C7
R108	K9	R509	*C6
R109	*K8	R510	*D8
R110	*K8	R700	*B7
R111	K9	R701	*B7
R112	*H7	R702	*B6
R113	K9	R703	*B6
R114	*L7	R704	*A5
R115	*K7	R705	*A7
R116	*J7	R706	C1
R117	*L8	R707	*C2
R118	*H8	R708	D1
R119	*K7		
R120	*K7	RB101	*K8
R121	*K7	RB200	*K5
R122	*K7	RB201	*K5
R123	*K7	RB202	*L6
R124	*K7	RB203	*K6
R125	*K7	RB204	*L6
R126	L7	RB205	*K6
R127	*L7	RB206	*K5
R128	L7	RB207	*K5
R129	*L7	RB208	*L5
R130	L7	RB209	*K5
R131	L7	RB210	*K6
R132	*L7	RB211	*H6
R133	L7	RB212	*K6
R134	L7	RB213	*J6
R135	*L7	RB214	*H6
R136	L7	RB215	*K6
R137	*L7	RB216	*K6
R138	L7	RB300	*K4
R139	*K7	RB301	*L4
R140	L6	RB302	*K4
R141	L6	RB303	*L4
R142	*L7	RB304	*L4
R143	L7	RB305	*L4
R144	L6	RB306	*L3
R145	L6	RB307	L3
R146	*L6	RB308	*K4
R147	*L8	RB309	*L3
R148	L7	RB310	*L2
R149	K9	RB311	*L2
R150	*K8	RB315	F1
R151	*K8	RB316	F1
R152	*L8	RB317	K4
R153	*J8	RB318	*L4
R154	*K8	RB400	K1
R155	*L8	RB500	F4
R156	*L8	RB501	F4
R200	K5	RB502	*C6
R201	*K6	RB600	*G8
R202	*L9	RB601	*F9
R203	*L9	RB602	*F8
R204	*H6	RB603	*F9
R205	*H6	RB604	*D9
R206	*H6	RB605	*D9
R207	*J6	RB606	*F8
R208	*K4	RB607	*E9
R209	*K5	RB608	*E8
R210	*J5	RB609	*E9
R211	H5	RB610	*C9
R212	H5	RB611	*C9
R300	L5	RB612	*H8
R301	L4	RB613	*H9
R302	K2	RB614	*G8
R303	K2	RB700	*E1
R305	L1	RB701	*E1
R306	K3	RB702	*E1
R307	K3	RB703	*E1
R308	J2	RB704	*E1
R309	J2	RB705	*E1
R310	*F2	RB706	E1
R311	*F2	RB707	*E1
R312	L4		
R313	L4	TP100	J8
R400	*G2	TP101	J7
R401	*J1	TP700	E1
R402	*J2	TP701	D1
R403	*G2	TP702	D1
R404	*J1		
R405	*J2		
R500	G4		
R501	*F5		
R502	G4		
R503	G4		
R504	*D8		

SV-210 (1-672-939-11)
---

*:B SIDE

C1	J3	C93	*A2	R29	*B2	R108	D4
C2	K5	C95	D2	R30	A3	R109	*G4
C3	L3			R31	A4	R110	*H4
C4	*B3	CL1	D2	R32	*B1	R111	*E5
C5	*A3	CL2	D2	R33	*B1	R112	*E5
C6	B3			R34	*C1	R113	*D5
C7	A3	CN1	F5	R35	*C1	R114	E2
C8	*C3	CN2	C1	R36	E3	R115	*F1
C9	*C3			R37	D1	R116	H1
C10	*C3	D1	*B3	R38	*L4	R120	D2
C11	*C3	D2	*A3	R39	*L4	R121	*B2
C12	*B3	D3	*M1	R40	*L4	R122	*B2
C13	*B3	D4	*M4	R41	*L4	R123	*B1
C14	*B3	D5	D3	R42	*J2	R125	*F4
C15	*B3	D6	*J1	R43	*J2		
C16	C4			R44	*L4	RB1	*C5
C17	B4	IC1	*D3	R45	*L4	RB2	*C5
C18	*C3	IC2	*G3	R46	*J2	RB3	*B5
C19	*B3	IC3	*B4	R47	*L4	RB4	*C5
C20	*C3	IC4	B3	R48	*J2	RB5	*C5
C21	*B3	IC5	C3	R49	*J2	RB6	*C5
C22	B2	IC6	C2	R50	*L4	RB7	*B5
C23	B2	IC7	B1	R51	*L2	RB8	*C5
C24	*G5	IC8	*B1	R52	*B2	RB9	*G5
C25	*G4	IC9	*L4	R53	*B2	RB10	*H5
C26	B2	IC10	*K2	R54	*L2	RB11	G4
C27	A4	IC11	B2	R55	*L1	RB12	*D5
C28	B4	IC12	K2	R56	*K1	RB13	*D5
C29	*A1	IC13	*L5	R57	*K1	RB14	*D5
C30	B4	IC14	J1	R58	*K1	RB15	*D5
C31	*B1	IC15	*G5	R59	*L2	RB16	*E5
C32	*B1	IC16	G1	R60	*K1	RB17	E1
C33	D1	IC20	E2	R61	*K1	RB18	*E4
C34	*L4	IC21	E3	R62	*J5	RB19	D1
C35	*L4	IC22	C3	R63	*J5	RB20	*E5
C36	*K4			R64	*J5	RB21	*F5
C37	*K3	L1	L1	R65	*K4	RB22	*G4
C38	*J2	L2	L4	R66	*K4	RB23	F4
C39	C3	L3	L5	R67	*K4	RB24	F4
C40	*B2			R68	*K4		
C41	E3	Q1	*L2	R69	*K4	SL3	A4
C42	E2	Q2	*L2	R70	*K3	SL4	E2
C43	*M2	Q3	*L3	R71	*K5		
C44	*A2	Q4	*K2	R72	*K4		
C45	B2	Q5	*L1	R73	*K4		
C46	*L1	Q6	*M3	R74	*K5		
C47	K1	Q7	*M3	R75	*K4		
C48	E2	Q8	*J1	R76	*K5		
C49	*L1	Q9	*J1	R77	*M3		
C50	*K3	Q10	*K1	R78	*M3		
C51	*L5			R79	G2		
C52	*K5	R1	B3	R80	*L4		
C53	*K4	R2	A3	R81	*L5		
C54	*K3	R3	C3	R82	*L4		
C55	F3	R4	C3	R83	*M5		
C56	G2	R5	B3	R84	*M4		
C57	*M3	R6	B3	R85	*K3		
C58	H3	R7	*G5	R86	*K3		
C59	H2	R8	*B3	R87	G1		
C60	*L3	R9	*A3	R88	*H1		
C61	K4	R10	*B3	R89	*H1		
C62	*K3	R11	*A3	R90	*J1		
C63	H2	R12	*C3	R91	*H1		
C64	G1	R13	*B3	R92	*J1		
C65	*G1	R14	*C3	R93	*J1		
C66	J1	R15	*B3	R94	*J1		
C67	*J1	R16	*B3	R95	*K1		
C68	J2	R17	*A3	R96	*K1		
C69	F2	R18	*C4	R97	*J1		
C70	*D4	R19	*B4	R98	F2		
C71	B1	R20	B3	R99	*H1		
C72	*M2	R21	A2	R100	*H1		
C73	*M2	R22	*G4	R101	*J1		
C74	*M4	R23	*G4	R102	*H1		
C75	*M3	R24	*B2	R103	*H4		
C80	*B4	R25	*C2	R104	G3		
C90	D3	R26	*B2	R105	G3		
C91	*B2	R27	*C2	R106	*D4		
C92	*B2	R28	*C2	R107	*D4		

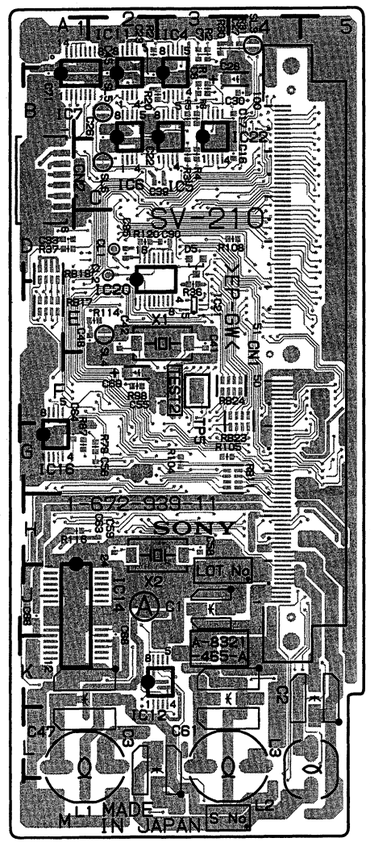

SV-210 -A SIDE-
SUFFIX:-11

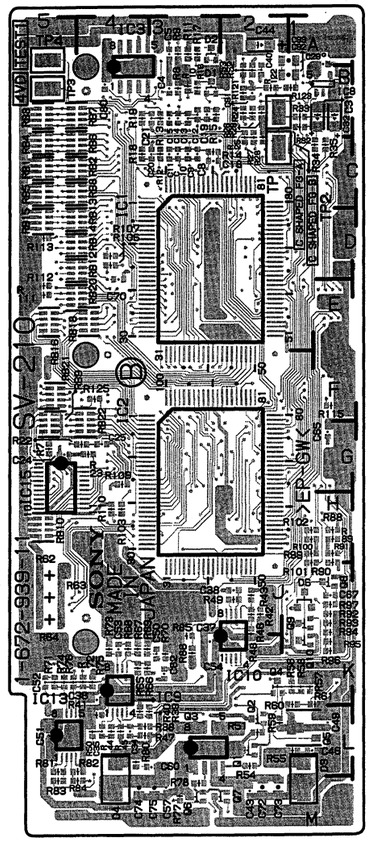

SV-210 -B SIDE-
SUFFIX:-11

CTL-10 (1-652-765-11)
---

*:B SIDE

CN1	D3
CN2	*B2
CN3	D1
CN4	*A3
C1	*D2
C2	*D3
C3	B3
C4	B3
C5	*B3
C6	*C3
C7	*C3
C8	C3
C9	C2
C10	D3
C11	*D3
E1	C2
E2	B2
IC1	*C2
IC2	C3
IC3	D3
Q1	*D2
Q2	*D2
R1	*C2
R2	*D2
R3	*C2
R4	*D2
R5	B2
R6	B2
R7	B3
R8	B3
R9	B3
R10	*C3
R11	C3
R12	C3
R13	D2
R14	D2
R15	D2
R16	D2
R17	*B3
R18	*B3
R19	*D3
R20	C2
TP1	C1
TP2	C1
TP3	B1

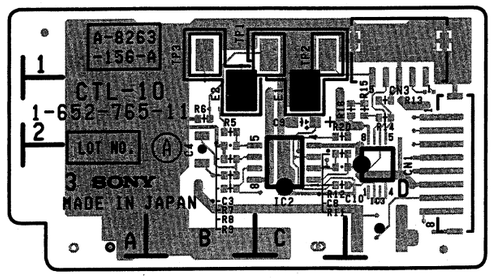

CTL-10 -A SIDE-
SUFFIX:-11

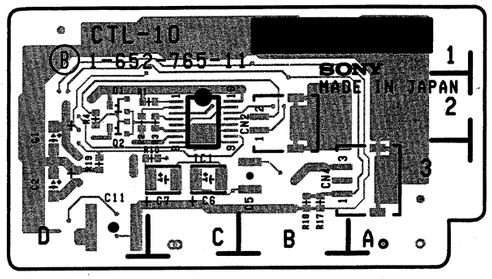

CTL-10 -B SIDE-
SUFFIX:-11

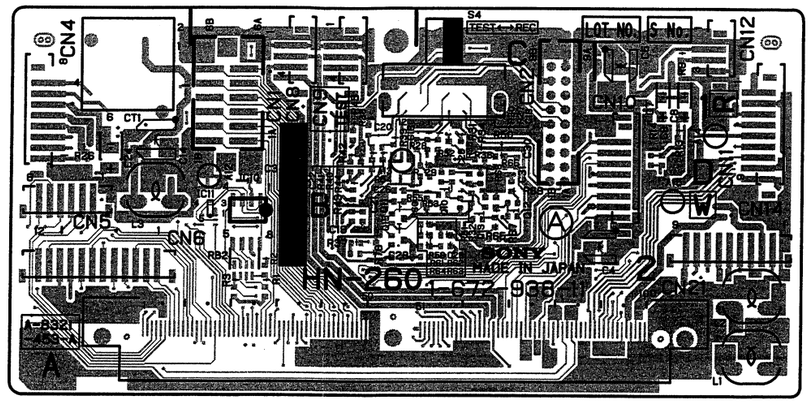

HN-260 -A SIDE-
SUFFIX:-11

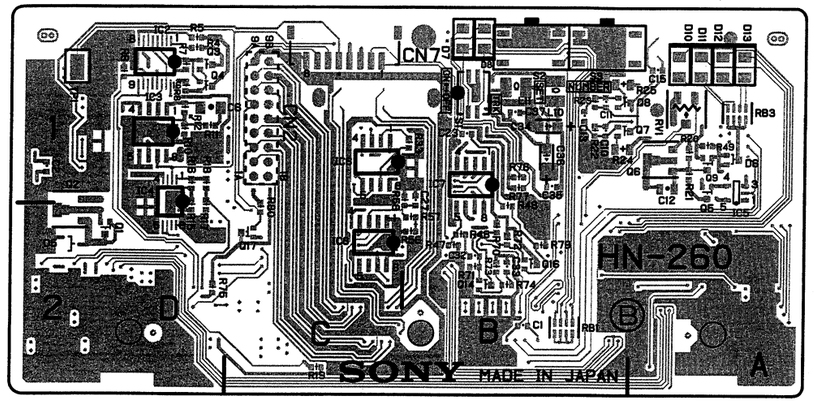

HN-260 -B SIDE-
SUFFIX:-11

HN-260 (1-672-938-11)
---

*:B SIDE

A12	B1	C35	*B1	L1	D2	R16	*D1	R55	C1
A13	B1	C36	*B1	L2	D2	R17	*D2	R56	*B2
A14	D1	C37	*B1	L3	A1	R18	*D1	R57	*B2
A15	D2			L10	*B1	R19	*C2	R58	*B1
		CN1	B1	L11	*B1	R20	*A1	R59	C2
C1	*B2	CN2	C1			R21	*A1	R60	C2
C2	*D1	CN4	A1	Q1	*D2	R22	*B1	R61	C2
C3	B1	CN5	A1	Q2	*D2	R23	*B1	R62	C2
C4	D2	CN6	A2	Q3	*D1	R24	*B1	R63	C2
C5	D1	CN7	*C1	Q4	*D1	R25	*B1	R64	C2
C6	*D1	CN8	B1	Q5	*A1	R26	A1	R65	C2
C7	D1	CN9	B1	Q6	*A1	R27	C1	R66	C1
C8	D1	CN10	D1	Q7	*B1	R28	C1	R67	C2
C9	D1	CN11	D1	Q8	*B1	R29	C1	R68	C1
C10	*B1	CN12	D1	Q9	*A1	R30	C1	R69	C1
C11	*B1	CN14	D2	Q10	C1	R31	C1	R70	*B2
C12	*A1	CN21	B2	Q11	B2	R32	C1	R71	*B2
C13	*B1			Q12	C2	R33	*B1	R72	*B2
C14	A1	CT1	A1	Q13	C2	R34	C1	R73	*B2
C15	*A1			Q14	*B2	R35	C1	R74	*B2
C16	C1	D5	*D2	Q15	B2	R36	C1	R75	*D2
C17	C1	D6	*A1	Q16	*B2	R37	B2	R76	*B1
C18	C1	D7	*B1	Q17	*C2	R38	B1	R77	*B1
C19	B2	D8	*B1			R39	B1	R78	B2
C20	B1	D10	*A1	R1	B2	R40	B1	R79	*B2
C21	B2	D11	*A1	R2	B2	R41	B1	R80	*C2
C22	B1	D12	*A1	R3	B2	R42	B1		
C23	*B1	D13	*A1	R4	*D1	R43	B2	RB1	*B2
C24	A1			R5	*D1	R44	B1	RB2	B2
C25	C1	IC2	*D1	R6	*D1	R45	B1	RB3	*A1
C26	B1	IC3	*D1	R7	*D1	R46	*B2		
C27	*B1	IC4	*D1	R8	*D1	R47	*B2	RV1	*A1
C28	B2	IC5	*A1	R9	D1	R48	*B2		
C29	C2	IC6	*C1	R10	*D1	R49	*A1	S1	*B1
C30	C1	IC7	*B1	R11	*D1	R50	C1	S2	*B1
C31	C1	IC8	*C2	R12	*D1	R51	C1	S3	*B1
C32	*B2	IC10	B1	R13	D1	R52	C1	S4	C1
C33	*B2	IC11	B2	R14	D1	R53	C1		
C34	*B1			R15	*D2	R54	B1	TP1	*D1

Lot No. : 810 through 907

TC-101 (1-672-902-11)

---

*:B SIDE

BT801	*B2	C165	*D3	C613	*D2	C820	*D5	D407	C3	IC612	C2	Q120	D4	R114	E3	R208	*E5	R300	*E3
		C166	*D3	C614	*D2	C821	C5	D408	C3	IC613	C2	Q121	E4	R115	E3	R209	E4	R301	*E3
		C167	*D3	C615	D2	C822	*E1	D601	*C1	IC614	C2	Q122	E5	R116	E3	R210	E4	R302	*E3
C1	*C4	C168	*D3	C616	D2	C823	*E1	D602	*B2	IC615	B2	Q123	*E4	R117	*E5	R211	E5	R303	E5
C2	A2	C169	*D3	C617	*D2	C824	*E1	D800	C5	IC616	C1	Q124	*E4	R118	*E5	R212	*D5	R304	*E3
C3	E5	C170	*D3	C618	*C2	C825	B3	D801	C5	IC617	B2	Q125	*E4	R119	*D3	R213	*D5	R305	*E3
C4	E5	C171	E5	C619	*D2	C826	B3	D802	A2	IC618	C1	Q126	*E4	R120	*E5	R214	*E5	R306	*E3
C5	*A2	C172	*D3	C620	*C2	C827	*D5	D803	A2	IC619	B2	Q127	*E4	R121	*E5	R215	*E5	R307	*E3
C6	*C4	C173	*D3	C621	D3	C828	*D5	D804	A2	IC620	*B2	Q128	*E4	R122	E3	R216	E4	R308	*E3
C7	*C4	C174	E5	C622	D3	C829	*B4	D805	A2	IC621	*C1	Q129	*E3	R123	E3	R217	E4	R309	*D4
C8	*E5	C175	E5	C623	D2	C830	*D5	D806	*D5	IC622	*B2	Q130	*E3	R124	E5	R218	E4	R310	*E4
C9	*E5	C176	*D3	C624	D2	C831	*D5	D807	*D5	IC630	*D2	Q131	*E3	R125	E5	R219	*E3	R311	*D4
C10	E5	C177	E5	C625	*D2	C832	*E1	D808	*B3	IC800	D5	Q132	*E3	R126	E2	R220	E5	R312	*D4
C11	E5	C178	*E5	C626	*D2	C833	B3	D809	*D5	IC802	A2	Q133	*E3	R127	E5	R221	E4	R313	*E4
C12	*E5	C179	E3	C627	*C2	C834	E1	D810	*D5	IC803	A2	Q134	*E3	R128	E5	R222	*E3	R314	*E4
C13	*E5	C180	D5	C628	*D3	C835	*E2	D811	B2	IC804	C4	Q135	D4	R129	E3	R223	*E4	R315	D4
C14	E5	C181	E5	C629	*D3	C836	*E1	D812	*E1	IC805	D5	Q136	D4	R130	E2	R224	*E4	R316	D4
C15	E5	C182	E3	C630	*D2	C837	*B3	D813	B2	IC806	B3	Q137	E4	R131	E3	R225	*E4	R317	D4
C16	*D1	C183	E5	C631	*D2	C838	*B3	D814	C5	IC807	D5	Q401	D5	R132	E3	R226	*E4	R318	E4
C17	C5	C184	*E5	C632	*D2	C839	C3	D815	C5	IC808	E1	Q402	D5	R133	E3	R227	*E4	R319	*D4
C18	*C5	C185	E5	C633	C2	C840	C3	D816	C5	IC809	B5	Q403	D5	R134	*E3	R228	*E4	R320	D4
C19	C5	C186	E5	C634	*C2	C841	C3	D817	B3	IC810	B5	Q404	D5	R135	E3	R229	E5	R321	D4
C20	*B4	C210	*D4	C635	*C2	C842	C3	D818	*D5	IC811	B5	Q405	D4	R136	*E3	R230	*E5	R322	D4
C21	*B4	C211	E4	C636	*D3	C843	*B3	D819	*E1	IC812	*D5	Q406	D4	R137	E3	R231	D4	R323	E4
C22	*B4	C401	*D5	C637	*D3	C844	*B3	D820	*E2	IC813	C5	Q407	D5	R138	*E3	R232	E5	R324	E4
C23	*B4	C402	D4	C638	*D2	C845	C5	D821	B5	IC814	*D1	Q408	D5	R139	E3	R233	D4	R325	D4
C24	*B4	C403	D4	C639	*D2	C846	*E2	D822	*E2	IC815	C5	Q409	*C4	R140	*E3	R234	*E4	R326	E4
C25	*B4	C404	*C4	C640	C2	C847	*E2	D823	D1	IC816	*E1	Q410	*D4	R141	E5	R235	E4	R327	E4
C26	*B4	C405	*D4	C641	*D2	C848	*E2	D824	*E1	IC817	*E1	Q411	*D4	R142	E3	R236	D4	R328	D4
C101	D5	C406	C4	C642	*D2	C849	*B3	D825	*E1	IC818	*E1	Q412	*C4	R143	*E3	R237	D4	R329	*D3
C102	*D5	C407	D4	C643	*D2	C850	C3	D830	D5	IC819	*D1	Q413	*D4	R144	E3	R238	E5	R330	E4
C103	E5	C408	*D4	C644	*C2	C851	*E1	D831	D5	IC820	C5	Q414	*C4	R145	*E3	R239	E4	R331	E4
C104	*E5	C409	*C4	C645	*C2	C852	*D1			IC821	D5	Q415	*D4	R146	*E3	R240	D4	R332	D4
C105	*E5	C410	D4	C646	D1	C853	*E1	E101	*D5	IC822	B4	Q416	*C4	R147	E3	R241	E4	R333	*D3
C106	*E5	C411	C4	C647	C2	C854	*D1	E102	*E5	IC823	*D5	Q417	*C5	R148	*E3	R242	D4	R334	E4
C107	*E5	C412	D4	C648	D1	C855	*E1	E601	*D1	IC824	C5	Q418	*D5	R149	E3	R243	E4	R335	E4
C108	*E5	C413	C4	C649	C2	C856	B5	E602	*C2	IC825	E2	Q419	*C5	R150	E3	R244	*D4	R336	*D3
C109	*D3	C414	D4	C650	*C2	C857	B5	E801	*D5	IC826	C4	Q420	*C5	R151	E3	R245	D5	R337	D3
C110	E3	C415	C4	C651	*D1	C858	B5			IC827	B3	Q421	*C3	R152	E3	R246	E5	R338	*E4
C111	*E3	C416	D4	C652	*C2	C859	B5	IC1	C4	IC828	*E2	Q422	*D4	R153	E5	R247	D5	R339	*E4
C112	E3	C417	C4	C653	*C2	C860	B5	IC2	E5	IC829	*E2	Q423	*C4	R154	E5	R248	E5	R340	D4
C113	*E3	C418	C4	C654	*C1	C861	*E1	IC3	E5	IC830	*C3	Q424	*C3	R155	*E3	R249	D4	R341	E4
C114	E5	C419	C4	C655	*C2	C862	B5	IC4	*D1	IC831	*D1	Q425	*C3	R156	*E4	R250	E4	R342	D4
C115	*E4	C420	*C4	C656	B2	C863	B5	IC5	*B4	IC832	*D1	Q426	*C3	R157	*E5	R251	*E4	R343	E4
C116	*E4	C421	D4	C657	C1	C864	*E2	IC10	*D5	IC833	*E1	Q601	*C1	R158	*E4	R252	D4	R344	D3
C117	*D5	C422	C4	C658	*B2	C865	B5	IC100	*E4	IC834	B5	Q602	*C2	R159	E4	R253	E4	R345	D3
C118	*E5	C423	*C4	C659	*C1	C866	D5	IC101	D5	IC835	*E1	Q603	B2	R160	*E4	R254	*D4	R346	D3
C119	E4	C424	*C4	C660	*B2	C867	*E2	IC102	E5	IC836	*D1	Q604	*C1	R161	*E5	R255	*E5	R347	D3
C120	E4	C425	D4	C661	*C1	C868	C5	IC103	E5	IC837	*E2	Q605	*B2	R162	E4	R256	*E5	R348	D3
C121	E5	C426	C4	C662	*C2	C869	*E2	IC104	*E3	IC838	C3	Q606	*C1	R163	*E4	R257	*E5	R349	*D3
C122	E4	C427	C4	C663	B2			IC105	*E3	IC839	*E2	Q607	*B2	R164	E4	R258	*E5	R350	*D3
C123	E4	C428	C4	C664	B2	CL801	*E2	IC106	E5	IC840	*E2	Q608	*C1	R165	E4	R259	D4	R351	*D3
C124	*E5	C429	D4	C665	*C1	CL802	*E2	IC107	E5	IC900	B5	Q609	*B2	R166	E4	R260	E4	R352	*D3
C125	*E5	C430	C4	C666	*B2	CL803	*E2	IC108	E5			Q610	*C1	R167	E4	R261	D4	R353	D3
C126	E5	C431	*D4	C667	B2			IC109	*E4	IS801	*B3	Q611	*B2	R168	*E4	R262	D4	R354	D3
C127	E4	C432	*C4	C668	B2	CN5	*A2	IC110	*E4			Q800	C5	R169	*E4	R263	*E5	R355	D3
C128	*E4	C433	D3	C669	C1	CN6	*B2	IC111	*E5	L1	*E5	Q801	C5	R170	D5	R264	E4	R357	*D4
C129	*E4	C434	D3	C670	*B2	CN7	B1	IC112	E5	L2	E5	Q802	*D5	R171	D5	R265	D4	R358	*D4
C130	*D4	C435	C3	C671	*B2	CN8	*A2	IC113	*D4	L3	*E5	Q803	*E1	R172	E5	R266	D4	R359	*E4
C131	*E3	C436	C3	C672	*C1	CN10	*E2	IC114	E5	L4	E5			R173	E5	R267	E5	R360	*E4
C132	*E3	C437	C3	C673	B2	CN121	*B5	IC115	E4	L101	*D3	R1	*C4	R176	D5	R268	E5	R401	*D5
C133	E5	C438	*C3	C674	B2	CN122	*B5	IC116	E4	L601	B2	R2	*C4	R177	D5	R269	E5	R402	*D5
C134	*E3	C439	*C3	C675	B2	CN123	*C5	IC117	E5	L801	B5	R3	*C4	R178	D5	R270	D4	R403	*D5
C135	*E3	C440	C3	C676	*B2	CN150	*D1	IC118	*D4			R4	E5	R179	E5	R271	E4	R404	*D5
C136	E3	C441	*C3	C677	B2	CN503	*D5	IC119	*E4	LCD801	D2	R5	*E5	R180	E5	R272	E4	R405	*D5
C137	E3	C442	C3	C678	C1			IC120	D3			R6	*E5	R181	E5	R273	E5	R406	*D5
C138	E3	C443	C3	C679	*B2	D1	E5	IC122	*D3	PH101	D3	R7	*E5	R182	E5	R274	*E5	R407	*D5
C139	E3	C444	C3	C680	*D1	D2	E5	IC123	D3			R8	*E5	R183	E5	R275	*E5	R408	*D5
C140	E3	C445	*C3	C681	C1	D3	*C5	IC401	*D5	Q1	C4	R9	*E5	R184	D5	R276	E4	R409	D4
C141	E4	C446	*C3	C682	*B2	D4	*C5	IC402	C4	Q2	*E5	R10	*D1	R185	D5	R277	E4	R410	D4
C142	D4	C447	*C3	C683	C1	D5	*C5	IC403	C4	Q3	*E5	R11	*D1	R186	D5	R278	E5	R411	D5
C143	E4	C448	*C3	C684	*B2	D6	*C5	IC404	C4	Q4	*C5	R12	*D1	R187	E5	R279	E4	R412	D5
C144	*D4	C449	*C3	C800	C5	D7	*C5	IC405	D4	Q5	*C5	R13	*C5	R188	E5	R280	E4	R413	D4
C145	*E4	C450	*C3	C801	C5	D9	*B4	IC406	D4	Q101	E3	R14	*C5	R189	E5	R281	E5	R414	D4
C146	D4	C451	*C3	C802	E5	D10	*B4	IC407	C4	Q102	E3	R15	*C5	R190	E5	R282	E4	R415	D4
C147	*D4	C452	*C3	C803	*A2	D11	*B4	IC408	D4	Q103	E4	R16	*D1	R191	E5	R283	*E4	R416	D4
C148	E4	C453	*C3	C804	*E5	D101	*E4	IC409	C4	Q104	E4	R17	*D1	R192	*E5	R284	E4	R417	D5
C149	*D3	C454	*C3	C805	*A2	D102	*E4	IC410	C3	Q105	*E4	R18	*C5	R193	*D5	R285	*E4	R418	D5
C150	*E4	C455	D5	C806	D5	D103	D5	IC411	*C3	Q106	*E4	R19	*B4	R194	*E5	R286	E4	R419	C5
C151	E4	C456	C5	C807	D5	D104	D5	IC412	*C3	Q107	D5	R101	*D5	R195	*E5	R287	E4	R420	C5
C152	*D3	C601	*D2	C808	D5	D105	E5	IC413	C3	Q108	D5	R102	*D5	R196	E5	R288	*E5	R421	C4
C153	*E4	C602	D2	C809	*C4	D106	E5	IC601	*D3	Q109	D5	R103	*E5	R197	*E5	R289	E4	R422	C4
C154	D3	C603	D2	C810	*C4	D107	E3	IC602	D2	Q110	E5	R104	*E5	R198	E4	R290	*E4	R423	C5
C155	D3	C604	D2	C811	D5	D108	E3	IC603	*D2	Q111	E5	R105	*D5	R199	*E4	R291	*E4	R424	C4
C156	E4	C605	*D2	C812	*D5	D109	D3	IC604	*D2	Q112	E5	R106	*E5	R200	*E4	R292	E4	R425	C4
C157	E4	C606	*D2	C813	*A2	D110	D3	IC605	*D1	Q113	E5	R107	D5	R201	*E3	R293	*E4	R426	C4
C158	D3	C607	*D2	C814	B3	D401	D5	IC606	*D1	Q114	E5	R108	E5	R202	*E4	R294	*E4	R427	*D4
C159	*D3	C608	*D2	C815	*C4	D402	D5	IC607	D2	Q115	E4	R109	*E5	R203	E4	R295	*E4	R428	*C4
C160	D3	C609	D2	C816	B3	D403	D5	IC608	C2	Q116	E4	R110	*E5	R204	E4	R296	*E4	R429	*D4
C161	D3	C610	*D2	C817	*D5	D404	D5	IC609	*D3	Q117	E5	R111	*E5	R205	E4	R297	E5	R430	*C4
C162	D3	C611	D2	C818	*C4	D405	*D4	IC610	D1	Q118	D4	R112	*E5	R206	E4	R298	E5	R431	C4
C163	D3	C612	*D2	C819	B3	D406	*C4	IC611	C2	Q119	E4	R113	E3	R207	*D5	R299	*E3	R432	C4

R433	*C4	R525	C3	R691	B1	R783	*C1	R883	B5	RB817	B4								
R434	*D4	R526	*D3	R692	B2	R784	B2	R884	*B3	RB818	*B3								
R435	D4	R527	*C3	R693	*C2	R785	*B2	R885	*B3	RB819	*B3								
R436	D4	R528	C3	R694	*C2	R786	C1	R886	*E1	RB820	*C4								
R437	*D4	R529	D3	R695	*C2	R787	B2	R887	C3	RB821	*C4								
R438	*C4	R530	C3	R696	*C2	R788	B5	R888	C3	RB822	*C3								
R439	*D4	R531	C3	R697	*C2	R789	C5	R889	*B4	RB823	B3								
R440	*C4	R532	C3	R698	*C2	R790	C1	R890	*B3	RB824	*E1								
R441	*D4	R533	*C3	R699	*C2	R791	*B2	R891	C3	RB825	*E1								
R442	*C4	R534	*C3	R700	*C2	R800	C5	R892	C3										
R443	*D4	R535	*C3	R701	B1	R801	D5	R893	C3	RV101	E3								
R444	*D4	R536	*C3	R702	B2	R802	D5	R894	C3	RV102	E3								
R445	*C4	R537	*C3	R703	*C2	R803	*D5	R895	C3	RV103	*E5								
R446	*C4	R538	*C3	R704	*C2	R804	*D5	R896	C3	RV104	*E5								
R447	*D4	R539	*C3	R705	B2	R805	*E1	R897	*E1	RV601	*D1								
R448	*C4	R540	*C3	R706	B2	R806	*D5	R898	*E1	RV602	*C2								
R449	*D4	R541	*C3	R707	B2	R807	*D5	R899	*E1										
R450	*C4	R542	*C3	R708	B2	R808	*D5	R900	*D1	S101	*E3								
R451	*D4	R601	D2	R709	*C2	R809	*D5	R901	*E1	S102	E4								
R452	*C4	R602	D3	R710	*C2	R810	*D5	R902	*E1	S103	E4								
R453	D4	R603	*D2	R711	*C1	R811	C5	R903	*E1	S104	E3								
R454	C4	R604	*D2	R712	*C1	R812	B5	R904	*E1	S105	E3								
R455	*D4	R605	*D2	R713	*C2	R813	B5	R905	B5	S106	*E5								
R456	*C4	R606	*D2	R714	*C1	R814	B5	R906	*E1	S107	*D5								
R457	*D4	R608	*D2	R715	*C2	R815	E1	R907	*E1	S108	E5								
R458	*C4	R609	*D2	R716	*C1	R816	E1	R908	B5	S601	*C2								
R459	*D4	R610	*D2	R717	*C2	R817	B5	R909	*E1	S602	*C1								
R460	*C4	R611	*D2	R718	*C1	R818	*D5	R910	*E1	S603	*B1								
R461	*C5	R612	*D2	R719	*B2	R819	*D5	R911	*E1	S801	E2								
R462	*D5	R613	*D2	R720	*C1	R820	E1	R912	*E1	S802	*B3								
R463	*C4	R614	D2	R721	*B2	R821	E1	R913	*E1	S803	D3								
R464	*D4	R615	D2	R722	B2	R822	B3	R914	*D3	S804	D4								
R465	C5	R616	D2	R723	B2	R823	C5	R915	*D3	S805	D3								
R466	*C4	R617	*D2	R724	*C1	R824	B5	R916	*D4	S806	E1								
R467	*D5	R618	D2	R725	*C2	R825	B5	R917	*D4	S807	D1								
R468	*D4	R619	*D2	R726	B2	R826	B5	R918	*D3	S808	D2								
R469	*C4	R620	*D1	R727	B2	R827	B5	R919	*D3	S809	D4								
R470	*D4	R621	*D2	R728	B2	R828	*E1	R920	B5	S810	D3								
R471	*C4	R622	*D1	R729	B2	R829	*D5	R921	B5	S811	D3								
R472	*D4	R623	*D2	R730	B2	R830	C3	R922	B5	S812	D4								
R473	C5	R625	*D1	R731	C1	R831	D5	R923	*E1										
R474	D5	R636	*D1	R732	*B2	R832	*E1	R924	B5	SL1	*A2								
R475	*C5	R637	D3	R733	B2	R833	C5	R925	*E1	SL101	*B5								
R476	*D5	R638	D3	R734	*C1	R834	C5	R926	B5	SL601	*D1								
R477	*C5	R639	*D2	R735	*B2	R835	C5	R927	B5	SL602	*C2								
R478	*D5	R644	*D2	R736	*C1	R836	D5	R928	B5	SL603	*D1								
R479	*C4	R645	*C2	R737	*B2	R837	B5	R929	B5	SL604	*C2								
R480	*D4	R646	*D3	R738	*C1	R838	C5	R930	B5	SL605	*B2								
R481	*C4	R647	*D2	R739	*B2	R839	C5	R931	D3	SL608	*C1								
R482	*D4	R648	*D2	R740	*C1	R840	C5	R932	D3	SL609	*B2								
R483	C5	R649	*C2	R741	*B2	R841	C5	R933	*D4	SL801	*C4								
R484	D5	R650	*D3	R742	*C1	R842	*E1	R934	*D4	SL802	*C4								
R485	*C4	R651	*D3	R743	*B2	R843	D5	R935	*D1	SL803	*B4								
R486	*C4	R652	*D2	R744	*C1	R844	*B4	R936	D2	SL804	*D2								
R487	*C4	R653	*C2	R745	*B2	R845	B5	R937	B5	SL805	*E1								
R488	*C4	R654	*D2	R746	B2	R846	B3	R938	*E1	SL806	*E1								
R489	*C4	R655	*C2	R747	*C1	R847	B3	R939	B5	SL807	*E1								
R490	*C4	R656	*D2	R748	*B2	R848	*D5	R940	B5	SL808	*E1								
R491	*C4	R657	*D2	R749	*C1	R849	*D5	R941	C5	SL809	*E1								
R492	*C4	R658	D1	R750	*B2	R850	*D5	R942	B5										
R493	*C4	R659	C2	R751	B2	R851	B4	R943	C5	TP101	*E5								
R494	*D4	R660	*D1	R752	B2	R852	B4	R944	C5	TP102	*D5								
R495	*C5	R661	C2	R753	*C1	R853	B4	R945	B5	TP401	*D4								
R496	*C5	R662	D1	R754	*B2	R854	*C4	R946	B5	TP402	*C4								
R497	D4	R663	C2	R755	C1	R855	*B3	R947	*E1	TP601	*C2								
R498	C4	R664	*D1	R756	*C1	R856	*B3	R948	C5	TP602	*C2								
R499	*D3	R665	*C2	R757	*B2	R857	C4	R949	*E1	TP603	*A2								
R500	*D3	R666	*D1	R758	B2	R858	B3	R950	*E1	TP800	*B4								
R501	*C4	R667	*C2	R759	*C1	R859	*B4	R951	*E1	TP801	*B4								
R502	*C4	R668	*D1	R760	*C1	R860	*E1	R952	*E1	TP802	*E1								
R503	*C4	R669	*C2	R761	*C1	R861	*C4	R953	C5	TP803	*B4								
R504	D4	R670	*C2	R762	*B2	R862	B3	R954	*C5	TP804	*B4								
R505	C4	R671	*D1	R763	*B2	R863	B3	R955	B5	TP805	*C3								
R506	*D4	R672	*D1	R764	*C1	R864	*B4	R956	*D5	TP806	*C4								
R507	*C4	R673	*C2	R765	*B2	R865	E1	R957	C5	TP807	*B4								
R508	*D4	R674	*D1	R766	*B2	R866	E1	R960	D5	TP808	*B4								
R509	*C4	R675	*D1	R767	*C1	R867	E1	R961	D5	TP809	*B4								
R510	*D4	R676	*C2	R768	*B2	R868	E1			TP810	*B4								
R511	*C4	R677	*D1	R769	*B2	R869	E1	RB101	D3	TP811	*E1								
R512	*D4	R678	*C2	R770	*D1	R870	E1	RB601	*D1										
R513	C4	R679	*C2	R771	B1	R871	E2	RB802	*E2	X801	B3								
R514	*C4	R680	*C2	R772	C1	R872	*C3	RB803	*D1	X802	*B3								
R515	C4	R681	*C2	R773	*D1	R873	*C3	RB805	*E1	X803	C3								
R516	D4	R682	*C2	R774	*C1	R874	C3	RB806	*D1	X804	B3								
R517	*D4	R683	*C2	R775	B2	R875	B5	RB808	*D2										
R518	C4	R684	*C2	R776	B1	R876	*C3	RB809	*D1										
R519	*C4	R685	*C2	R777	*B2	R877	*C3	RB811	*D2										
R520	*D3	R686	*C2	R778	*C1	R878	*C3	RB812	*E1										
R521	*D3	R687	*C2	R779	*C1	R879	*C3	RB813	B4										
R522	*C3	R688	*C2	R780	*B2	R880	*B4	RB814	B4										
R523	*C3	R689	*C2	R781	*B2	R881	*B3	RB815	B4										
R524	D3	R690	*C2	R782	C1	R882	*E1	RB816	*B3										

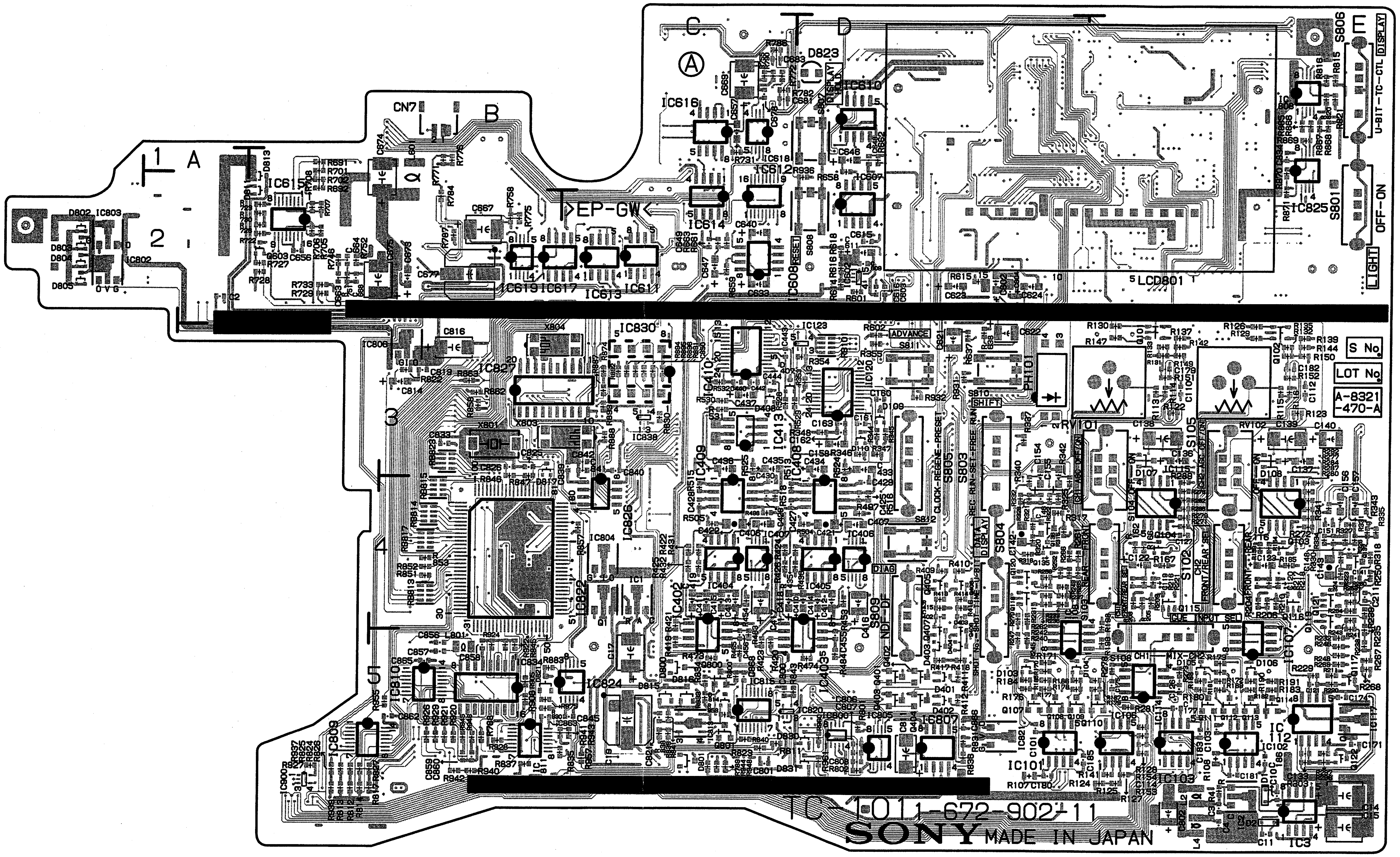

Components locations list ; previous page

TC-101 -A SIDE-

SUFFIX:-11

DVW-707 (J) : S/N 30001 through 30010	DVW-709WS (J) : S/N 30001 through 30005	DVW-790WS (J) : S/N 30001 through 30005
DVW-707 (SY) : S/N 10001 through 10055	DVW-709WS (SY) : S/N 10001 through 10105	DVW-790WS (SY) : S/N 10001 through 10090
DVW-707P : S/N 40001 through 40120	DVW-709WSP : S/N 40001 through 40190	DVW-790WSP : S/N 40001 through 40335

SONY-SP1386 / DRUCK 194

Lot No. : 907N and Higher

TC-101 (1-672-902-12)
---

*:B SIDE

BT801	*B2	C166	*D3	C614	*D2	C821	C5	D406	*C4	IC611	C2	Q118	D4	R104	*E5	R198	E4	R292	E4	R425	C4	R527	*C3
		C167	*D3	C615	D2	C822	*E1	D407	C3	IC612	C2	Q119	E4	R105	*D5	R199	*E4	R293	*E4	R426	C4	R528	C3
		C168	*D3	C616	D2	C823	*E1	D408	C3	IC613	C2	Q120	D4	R106	*E5	R200	*E4	R294	*E4	R427	*D4	R529	D3
C1	*C4	C169	*D3	C617	*D2	C824	*E1	D601	*C1	IC614	C2	Q121	E4	R107	D5	R201	*E3	R295	*E4	R428	*C4	R530	C3
C2	A2	C170	*D3	C618	*D2	C825	B3	D602	*B2	IC615	B2	Q122	E5	R108	E5	R202	*E4	R296	*E4	R429	*D4	R531	C3
C3	E5	C171	E5	C619	*D2	C826	B3	D801	C5	IC616	C1	Q123	*E4	R109	*E5	R203	E4	R297	E5	R430	*C4	R532	C3
C4	E5	C172	*D3	C620	*C2	C827	*D5	D802	A2	IC617	B2	Q124	*E4	R110	*E5	R204	E4	R298	E5	R431	*C4	R533	*C3
C5	*A2	C173	*D3	C621	D3	C828	*D5	D803	A2	IC618	C1	Q125	*E4	R111	*E5	R205	E4	R299	*E3	R432	*C4	R534	*C3
C6	*C4	C174	E5	C622	D3	C829	*B4	D804	A2	IC619	B2	Q126	*E4	R112	*E5	R206	E4	R300	*E3	R433	*C4	R535	*C3
C7	*C4	C175	E5	C623	D2	C830	*D5	D805	A2	IC620	*B2	Q127	*E4	R113	E3	R207	*D5	R301	*E3	R434	*D4	R536	*C3
C8	*E5	C176	*D3	C624	D2	C831	*D5	D806	*D5	IC621	*C1	Q128	*E4	R114	E3	R208	*E5	R302	*E3	R435	*D4	R537	*C3
C9	*E5	C177	E5	C625	*D2	C832	*E1	D807	*D5	IC622	*B2	Q129	*E3	R115	E3	R209	E4	R303	E5	R436	*D4	R538	*C3
C10	E5	C178	*E5	C626	*D2	C833	B3	D808	*B3	IC630	*D2	Q130	*E3	R116	E3	R210	E4	R304	*E3	R437	*D4	R539	*C3
C11	E5	C179	E3	C627	*C2	C834	E2	D809	*D5	IC800	D5	Q131	*E3	R117	*E5	R211	E5	R305	*E3	R438	*C4	R540	*C3
C12	*E5	C180	D5	C628	*D3	C835	*E2	D810	*D5	IC802	A2	Q132	*E3	R118	*E5	R212	*D5	R306	*E3	R439	*D4	R541	*C3
C13	*E5	C181	E5	C629	*D3	C836	*E2	D811	B2	IC803	A2	Q133	*E3	R119	*D3	R213	*D5	R307	*E3	R440	*C4	R542	*C3
C14	E5	C182	E3	C630	*D2	C837	*B3	D812	*E1	IC804	C4	Q134	*E3	R120	*E5	R214	*E5	R308	*E3	R441	*D4	R601	D2
C15	E5	C183	E5	C631	*D2	C838	*B3	D813	B2	IC805	D5	Q135	D4	R121	*E5	R215	*E5	R309	*D4	R442	*C4	R602	D3
C16	*D1	C184	*E5	C632	*D2	C839	C3	D814	C5	IC806	B3	Q136	D4	R122	E3	R216	E4	R310	*E4	R443	*D4	R603	*D2
C17	C5	C185	E5	C633	C2	C840	C3	D815	C5	IC807	D5	Q137	E4	R123	E3	R217	E4	R311	*D4	R444	*D4	R604	*D2
C18	*C5	C186	E5	C634	*C2	C841	C3	D816	C5	IC808	E1	Q140	E3	R124	E5	R218	E4	R312	*D4	R445	*C4	R605	*D2
C19	C5	C210	*D4	C635	*C2	C842	C3	D817	B3	IC809	B5	Q141	E3	R125	E5	R219	*E3	R313	*E4	R446	*C4	R606	*D2
C20	*B4	C211	E4	C636	*D3	C843	*B3	D818	*D5	IC810	B5	Q401	D5	R126	E3	R220	E5	R314	*E4	R447	*D4	R608	*D2
C21	*B4	C401	*D5	C637	*D3	C844	*B3	D819	*E1	IC811	B5	Q402	D5	R127	E5	R221	E4	R315	D4	R448	*C4	R609	*D2
C22	*B4	C402	D4	C638	*D2	C845	C5	D820	*E2	IC812	*D5	Q403	D5	R128	E5	R222	*E3	R316	D4	R449	*D4	R610	*D2
C23	*B4	C403	D4	C639	*D2	C846	*E2	D821	B5	IC813	C5	Q404	D5	R129	E2	R223	*E4	R317	D4	R450	*C4	R611	*D2
C24	*B4	C404	*C4	C640	C2	C847	*E2	D822	*E2	IC814	*D1	Q405	D4	R130	E3	R224	*E4	R318	E4	R451	*D4	R612	*D2
C25	*B4	C405	*D4	C641	*D2	C848	*E2	D823	D1	IC815	C5	Q406	D4	R131	E3	R225	*E4	R319	*D4	R452	*C4	R613	*D2
C26	*B4	C406	C4	C642	*D2	C849	*B3	D824	*E1	IC816	*E1	Q407	D5	R132	E3	R226	*E4	R320	D4	R453	D4	R614	D2
C101	D5	C407	D4	C643	*D2	C850	C3	D825	*E1	IC817	*E1	Q408	D5	R133	E3	R227	*E4	R321	D4	R454	C4	R615	D2
C102	*D5	C408	*D4	C644	*C2	C851	*E1	D830	D5	IC818	*E1	Q409	*C4	R134	*E3	R228	*E4	R322	D4	R455	*D4	R616	D2
C103	E5	C409	*C4	C645	*C2	C852	*D1	D831	D5	IC819	*D1	Q410	*D4	R135	E3	R229	E5	R323	E4	R456	*C4	R617	*D2
C104	*E5	C410	D4	C646	D1	C853	*E1	D832	E1	IC820	C5	Q411	*D4	R136	*E3	R230	*E5	R324	E4	R457	*D4	R618	D2
C105	*E5	C411	C4	C647	*C2	C854	*D1			IC821	D5	Q412	*C4	R137	E3	R231	D5	R325	D4	R458	*C4	R619	*D2
C106	*E5	C412	D4	C648	D1	C855	*E1	E101	*D5	IC822	B4	Q413	*D4	R138	*E3	R232	E5	R326	E4	R459	*D4	R620	*D1
C107	*E5	C413	C4	C649	*C2	C856	B5	E102	*E5	IC823	*D5	Q414	*C4	R139	E3	R233	D4	R327	E4	R460	*C4	R621	*D2
C109	*D3	C414	D4	C650	*C2	C857	B5	E601	*D2	IC824	C5	Q415	*D4	R140	*E3	R234	*E4	R328	D4	R461	*C5	R622	*D1
C110	E3	C415	C4	C651	*D1	C858	B5	E602	*C2	IC825	E2	Q416	*C4	R141	E5	R235	E4	R329	*D3	R462	*D5	R623	*D2
C111	*E3	C416	D4	C652	*C2	C859	B5	E801	*D5	IC826	C4	Q417	*C5	R142	E3	R236	D4	R330	E4	R463	*C5	R625	*D1
C112	E3	C417	C4	C653	*C2	C860	B5			IC827	B3	Q418	*D5	R143	*E3	R237	D4	R331	E4	R464	*D5	R636	*D1
C113	*E3	C418	C4	C654	*C1	C861	*E1	IC1	C4	IC828	*E2	Q419	*C5	R144	E3	R238	E4	R332	D4	R465	*C5	R637	D3
C114	E5	C419	C4	C655	*C2	C862	B5	IC2	E5	IC829	*E2	Q420	*C5	R145	*E3	R239	E4	R333	*D3	R466	*C5	R638	D3
C115	*E4	C420	*C4	C656	B2	C863	B5	IC3	E5	IC830	*C3	Q421	*C3	R146	*E3	R240	D4	R334	E4	R467	*D5	R639	*D2
C116	*E4	C421	D4	C657	C1	C864	*E2	IC4	*D1	IC831	*D1	Q422	*D4	R147	E2	R241	E4	R335	E4	R468	*D5	R644	*D2
C117	*D5	C422	C4	C658	*B2	C865	B5	IC5	*B4	IC832	*D1	Q423	*C4	R148	*E3	R242	D4	R336	*D3	R469	*C5	R645	*C2
C118	*E5	C423	*C4	C659	*C1	C866	D5	IC10	*D5	IC833	*E1	Q424	*C3	R149	E3	R243	E4	R337	D3	R470	*D5	R646	*D3
C119	E4	C424	*C4	C660	*B2	C867	*E2	IC100	*E4	IC834	B5	Q425	*C3	R150	E3	R244	*D4	R338	*E4	R471	*C4	R647	*D2
C120	E4	C425	D4	C661	*C1	C868	C5	IC101	D5	IC835	*E1	Q426	*C3	R151	E3	R245	D4	R339	*E4	R472	*D4	R648	*D2
C121	E5	C426	C4	C662	*C2	C869	*E2	IC102	E5	IC836	*D1	Q601	*C1	R152	E3	R246	E5	R340	D4	R473	C5	R649	*C2
C122	E4	C427	C4	C663	B2	C870	*E1	IC103	E5	IC837	*E2	Q602	*C2	R153	E5	R247	D5	R341	E4	R474	D5	R650	*D3
C123	E4	C428	C4	C664	B2	C871	E1	IC104	*E3	IC838	C3	Q603	B2	R154	E5	R248	E5	R342	D4	R475	*C5	R651	*D3
C124	*E5	C429	D4	C665	*C1			IC105	*E3	IC839	*E2	Q604	*C1	R155	*E3	R249	*E3	R343	E4	R476	*D5	R652	*D2
C125	*E5	C430	C4	C666	*B2	CL801	*E2	IC106	E5	IC840	*E2	Q605	*B2	R156	*E4	R250	*E3	R344	D3	R477	*C5	R653	*C2
C126	E5	C431	*D4	C667	B2	CL802	*E2	IC107	E5	IC900	B5	Q606	*C1	R157	*E5	R251	*E4	R345	D3	R478	*C5	R654	*D2
C127	E4	C432	*C4	C668	B2	CL803	*E2	IC108	E5	IC901	*E1	Q607	*B2	R158	*E4	R252	*E3	R346	D3	R483	C5	R655	*C2
C128	*E4	C433	D3	C669	C1			IC109	*E4			Q608	*C1	R159	E4	R253	*E3	R347	D3	R484	D5	R656	*D2
C129	*E4	C434	D3	C670	*B2	CN5	*A2	IC110	*E4	IS801	*B3	Q609	*B2	R160	*E4	R254	*D4	R348	D3	R487	*C5	R657	*D2
C130	*D4	C435	C3	C671	*B2	CN6	*B2	IC111	*E5			Q610	*C1	R161	*E5	R255	*E5	R349	*D3	R489	*D5	R660	*D1
C131	*E3	C436	C3	C672	*C1	CN7	B1	IC112	E5	L1	*E5	Q611	*B2	R162	E4	R256	*E5	R350	*D3	R491	*C5	R661	*C2
C132	*E3	C437	C3	C673	B2	CN8	*A2	IC113	*D4	L2	E5	Q612	*D1	R163	*E4	R257	*E5	R351	*D3	R493	*C5	R662	D1
C133	E5	C438	*C3	C674	B2	CN10	*E2	IC114	E5	L3	*E5	Q613	*D1	R164	E4	R258	*E5	R352	*D3	R495	*C5	R663	*C2
C134	*E3	C439	*C3	C675	B2	CN121	*B5	IC115	E4	L4	E5	Q614	C2	R165	E4	R259	*E2	R353	D3	R496	*C5	R664	D1
C135	*E3	C440	C3	C676	*B2	CN122	*B5	IC116	E4	L101	*D3	Q615	C2	R166	E4	R260	*E3	R354	D3	R497	D4	R665	*C2
C136	E3	C441	*C3	C677	B2	CN123	*C5	IC117	E5	L601	B2	Q800	C5	R167	E4	R261	D4	R355	D3	R498	C4	R666	D1
C137	E3	C442	C3	C678	C1	CN150	*D1	IC118	*D4	L801	B5	Q801	C5	R168	*E4	R262	*E3	R357	*D4	R499	*D3	R667	*C2
C138	E3	C443	C3	C679	*B2	CN503	*D5	IC119	*E4			Q802	*D5	R169	*E4	R263	*E5	R358	*D4	R500	*D3	R668	D1
C139	E3	C444	C3	C680	*D1			IC120	D3	ND801	D2	Q803	*E1	R170	D5	R264	*E3	R359	*E4	R501	*C4	R669	*C2
C140	E3	C445	*C3	C681	C1	D1	E5	IC122	*D3			Q804	*E1	R171	D5	R265	D4	R360	*E4	R502	*C4	R670	*C2
C141	E4	C446	*C3	C682	*B2	D2	E5	IC123	D3	PH101	D3			R172	E5	R267	*E5	R401	*D5	R503	*C4	R671	*D1
C142	D4	C447	*C3	C683	C1	D3	*C5	IC401	*D5			R1	*C4	R173	E5	R269	E5	R402	*D5	R504	D4	R672	*D1
C143	E4	C448	*C3	C684	*B2	D4	*C5	IC402	C4	Q1	C4	R2	*C4	R176	D5	R270	D4	R403	*D5	R505	C4	R673	*C2
C144	*D4	C449	*C3	C800	C5	D5	*C5	IC403	C4	Q2	*E5	R3	*C4	R177	D5	R271	E4	R404	*D5	R506	*D4	R674	*D1
C145	*E4	C450	*C3	C801	C5	D6	*C5	IC404	C4	Q3	*E5	R4	E5	R178	D5	R272	E4	R405	*D5	R507	*C4	R675	*D1
C146	D4	C451	*C3	C802	E5	D7	*C5	IC405	D4	Q4	*C5	R5	*E5	R179	E5	R273	E5	R406	*D5	R508	*D4	R676	*C2
C147	*D4	C452	*C3	C803	*A2	D9	*B4	IC406	D4	Q5	*C5	R6	*E5	R180	E5	R274	*E5	R407	*D5	R509	*C4	R677	*D1
C148	E4	C453	*C3	C804	*E5	D10	*B4	IC407	C4	Q101	E3	R7	*E5	R181	E5	R275	*E5	R408	*D5	R510	*D4	R678	*C2
C149	*D3	C454	*C3	C805	*A2	D11	*B4	IC408	D4	Q102	E3	R8	*E5	R182	E5	R276	E4	R409	D4	R511	*C4	R679	*C2
C150	*E4	C455	D5	C806	D5	D101	*E4	IC409	C4	Q103	E4	R9	*E5	R183	E5	R277	E4	R410	D4	R512	*D4	R680	*C2
C151	E4	C456	C5	C807	D5	D102	*E4	IC410	C3	Q104	E4	R10	*D1	R184	D5	R278	E5	R411	D5	R513	C4	R681	*C2
C152	*D3	C601	*D2	C808	D5	D103	D5	IC411	*C3	Q105	*E4	R11	*D1	R185	D5	R279	E4	R412	D5	R514	*C4	R682	*C2
C153	*E4	C602	D2	C809	*C4	D104	D5	IC412	*C3	Q106	*E4	R12	*D1	R186	D5	R280	E4	R413	D4	R515	C4	R683	*C2
C154	D3	C603	D2	C810	*C4	D105	E5	IC413	C3	Q107	D5	R13	*C5	R187	E5	R281	E5	R414	D4	R516	D4	R684	*C2
C155	D3	C604	D2	C811	D5	D106	E5	IC601	*D3	Q108	D5	R14	*C5	R188	E5	R282	E4	R415	D4	R517	*D4	R685	*C2
C156	E4	C605	*D2	C812	*D5	D107	E3	IC602	D2	Q109	D5	R15	*C5	R189	E5	R283	*E4	R416	D4	R518	C4	R686	*C2
C157	E4	C606	*D2	C813	*A2	D108	E3	IC603	*D2	Q110	E5	R16	*D1	R190	E5	R284	E4	R417	D5	R519	*C4	R687	*C2
C158	D3	C607	*D2	C814	B3	D109	D3	IC604	*D2	Q111	E5	R17	*D1	R191	E5	R285	*E4	R418	D5	R520	*D3	R688	*C2
C159	*D3	C608	*D2	C815	*C4	D110	D3	IC605	*D1	Q112	E5	R18	*C5	R192	*E5	R286	E4	R419	C5	R521	*D3	R689	*C2
C160	D3	C609	D2	C816	B3	D401	D5	IC606	*D1	Q113	E5	R19	*B4	R193	*D5	R287	E4	R420	C5	R522	*C3	R690	*C2
C161	D3	C610	*D2	C817	*D5	D402	D5	IC607	D2	Q114	E5	R100	*E5	R194	*E5	R288	*E5	R421	C4	R523	*C3	R691	B1
C162	D3	C611	D2	C818	*C4	D403	D5	IC608	C2	Q115	E4	R101	*D5	R195	*E5	R289	E4	R422	C4	R524	D3	R692	B2
C163	D3	C612	*D2	C819	B3	D404	D5	IC609	*D3	Q116	E4	R102	*D5	R196	E5	R290	*E4	R423	C5	R525	C3	R693	*C2
C164	*D3	C613	*D2	C820	*D5	D405	*D4	IC610	D1	Q117	E5	R103	*E5	R197	*E5	R291	*E4	R424	C4	R526	*D3	R694	*C2

R695	*C2	R793	*D1	R885	*B3	RB808	*D2																
R696	*C2	R794	D1	R886	*E1	RB809	*D1																
R697	*C2	R795	D1	R887	C3	RB811	*D2																
R698	*C2	R796	*C2	R888	C3	RB812	*E1																
R699	*C2	R797	*C2	R889	*B4	RB813	B4																
R700	*C2	R798	*C2	R890	*B3	RB814	B4																
R701	B1	R799	*C2	R891	C3	RB815	B4																
R702	B2	R800	C5	R892	C3	RB816	*B3																
R703	*C2	R801	D5	R893	C3	RB817	B4																
R704	*C2	R802	D5	R894	C3	RB818	*B3																
R705	B2	R803	*D5	R895	C3	RB819	*B3																
R706	B2	R804	*D5	R896	C3	RB820	*C4																
R707	B2	R805	*E1	R897	*E1	RB821	*C4																
R708	B2	R806	*D5	R898	*E1	RB822	*C3																
R709	*C2	R807	*D5	R899	*E1	RB823	B3																
R710	*C2	R808	*D5	R900	*D1	RB824	*E1																
R711	*C1	R809	*D5	R901	*E1	RB825	*E1																
R712	*C1	R810	*D5	R902	*E1																		
R713	*C2	R811	C5	R903	*E1	RV101	E3																
R714	*C1	R812	B5	R904	*E1	RV102	E3																
R715	*C2	R813	B5	R905	B5	RV103	*E5																
R716	*C1	R814	B5	R906	*E1	RV104	*E5																
R717	*C2	R815	E1	R907	*E1	RV601	*D1																
R718	*C1	R816	E1	R908	B5	RV602	*C2																
R719	*B2	R817	B5	R909	*E1																		
R720	*C1	R818	*D5	R910	*E1	S101	*E3																
R721	*B2	R819	*D5	R911	*E1	S102	E4																
R722	B2	R820	E1	R912	*E1	S103	E4																
R723	B2	R821	E1	R913	*E1	S104	E3																
R724	*C1	R822	B3	R914	*D3	S105	E3																
R725	*C2	R823	C5	R915	*D3	S106	*E5																
R726	B2	R824	B5	R916	*D4	S107	*D5																
R727	B2	R825	B5	R917	*D4	S108	E5																
R728	B2	R826	B5	R918	*D3	S601	*C2																
R729	B2	R827	B5	R919	*D3	S602	*C1																
R730	B2	R828	*E1	R920	B5	S603	*B1																
R731	C1	R829	*D5	R921	B5	S801	E2																
R732	*B2	R830	C3	R922	B5	S802	*B3																
R733	B2	R831	D5	R923	*E1	S803	D3																
R734	*C1	R832	*E1	R924	B5	S804	D4																
R735	*B2	R833	C5	R925	*E1	S805	D3																
R736	*C1	R834	C5	R926	B5	S806	E1																
R737	*B2	R835	C5	R927	B5	S807	D1																
R738	*C1	R836	D5	R928	B5	S808	D2																
R739	*B2	R837	B5	R929	B5	S809	D4																
R740	*C1	R838	C5	R930	B5	S810	D3																
R741	*B2	R839	C5	R931	D3	S811	D3																
R742	*C1	R840	C5	R932	D3	S812	D4																
R743	*B2	R841	C5	R933	*D4																		
R744	*C1	R842	*E1	R934	*D4	SL1	*A2																
R745	*B2	R843	D5	R935	*D1	SL101	*B5																
R746	B2	R844	*B4	R936	D2	SL605	*B2																
R747	*C1	R845	B5	R937	B5	SL801	*C4																
R748	*B2	R846	B3	R938	*E1	SL802	*C4																
R749	*C1	R847	B3	R939	B5	SL803	*B4																
R750	*B2	R848	*D5	R940	B5	SL804	*D2																
R751	B2	R849	*D5	R941	C5	SL805	*E1																
R752	B2	R850	*D5	R942	B5	SL806	*E1																
R753	*C1	R851	B4	R943	C5	SL807	*E1																
R754	*B2	R852	B4	R944	C5	SL808	*E1																
R755	*C1	R853	B4	R945	B5	SL809	*E1																
R756	C1	R854	*C4	R946	B5																		
R757	*B2	R855	*B3	R947	*E1	TP101	*E5																
R758	*B2	R856	*B3	R948	C5	TP102	*D5																
R759	*C1	R857	C4	R949	*E1	TP401	*D4																
R760	*C1	R858	B3	R950	*E1	TP402	*C4																
R761	*C1	R859	*B4	R951	*E1	TP601	*C2																
R762	*B2	R860	*E1	R952	*E1	TP602	*C2																
R763	*B2	R861	*C4	R953	C5	TP603	*A2																
R764	*C1	R862	B3	R954	*C5	TP800	*B4																
R765	*B2	R863	B3	R955	B5	TP801	*B4																
R766	*B2	R864	*B4	R956	*D5	TP802	*E2																
R769	*B2	R865	E1	R957	C5	TP803	*B4																
R770	*D1	R866	E1	R960	D5	TP804	*B4																
R771	B1	R867	E1	R961	D5	TP805	*C3																
R772	*C2	R868	E1	R962	E1	TP806	*C4																
R773	*D1	R869	E2	R963	E1	TP807	*B4																
R774	*C1	R870	E2	R964	*D1	TP808	*B4																
R775	*C2	R871	E2	R965	*D1	TP809	*B4																
R776	B1	R872	*C3	R966	*E1	TP810	*B4																
R777	*B2	R873	*C3	R967	E1	TP811	*E1																
R781	*B2	R874	C3	R968	*E1																		
R782	C1	R875	B5	R969	E1	X801	B3																
R783	D1	R876	*C3	R970	*C5	X802	*B3																
R784	B2	R877	*C3	R971	C5	X803	C3																
R785	*C1	R878	*C3			X804	B3																
R786	C1	R879	*C3	RB101	D3																		
R787	B2	R880	*B4	RB601	*D1																		
R788	B5	R881	*B3	RB802	*E2																		
R789	C5	R882	*E1	RB803	*D1																		
R790	*D1	R883	B5	RB805	*E1																		
R792	*D1	R884	*B3	RB806	*D1																		

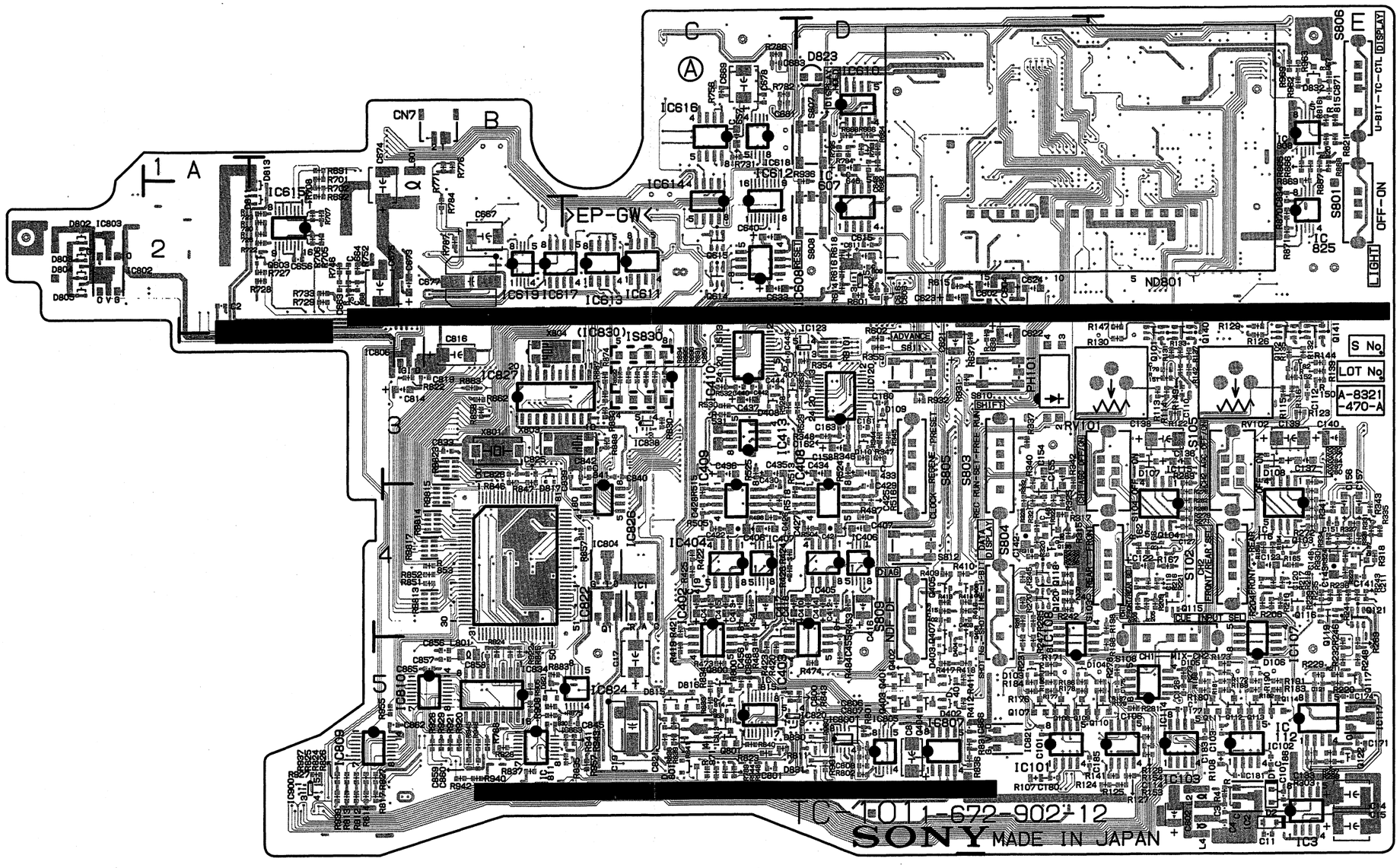

Components locations list ; previous page

TC-101 -A SIDE-
SUFFIX:-12

DVW-707 (J) : S/N 30011 and Higher	DVW-709WS (J) : S/N 30006 and Higher	DVW-790WS (J) : S/N 30006 and Higher
DVW-707 (SY) : S/N 10056 and Higher	DVW-709WS (SY) : S/N 10106 and Higher	DVW-790WS (SY) : S/N 10091 and Higher
DVW-707P : S/N 40121 and Higher	DVW-709WSP : S/N 40191 and Higher	DVW-790WSP : S/N 40336 and Higher

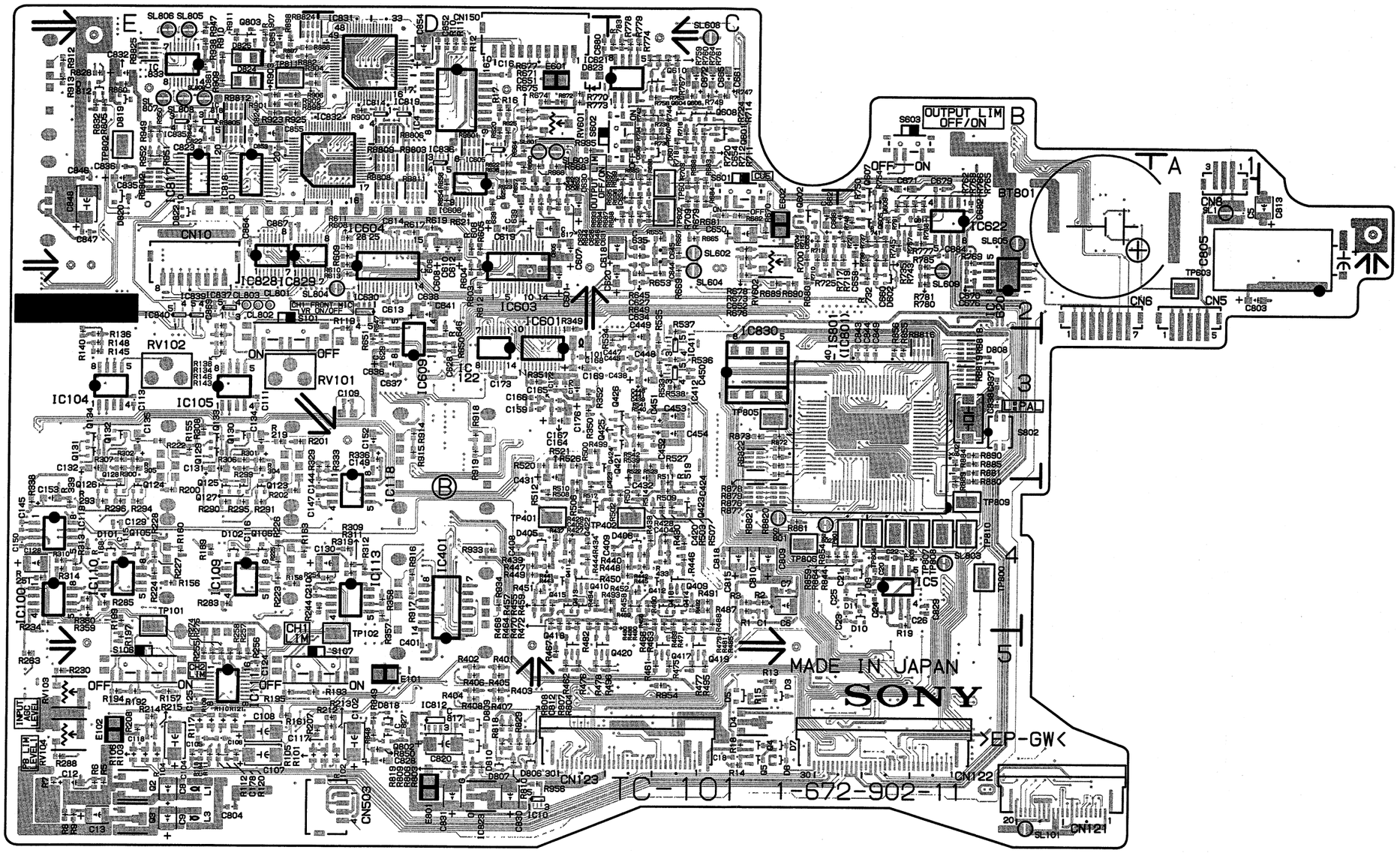

TC-101 -B SIDE-
SUFFIX:-11

AXM-21, CUE-2

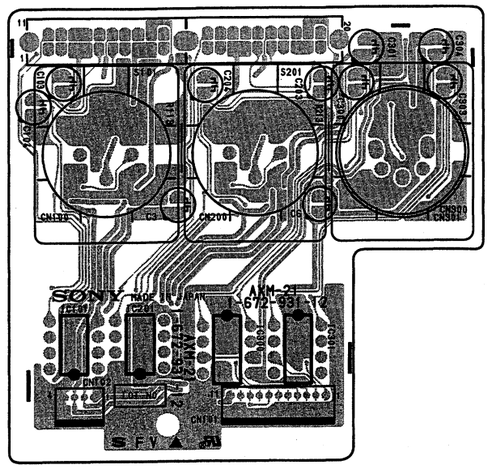

AXM-21 -A SIDE-
SUFFIX:-12

DVW-707 (J) : S/N 30006 and Higher
DVW-707 (SY) : S/N 10046 and Higher
DVW-707P : S/N 40101 and Higher

DVW-709WS (J) : S/N 30006 and Higher
DVW-709WS (SY) : S/N 10066 and Higher
DVW-709WSP : S/N 40141 and Higher

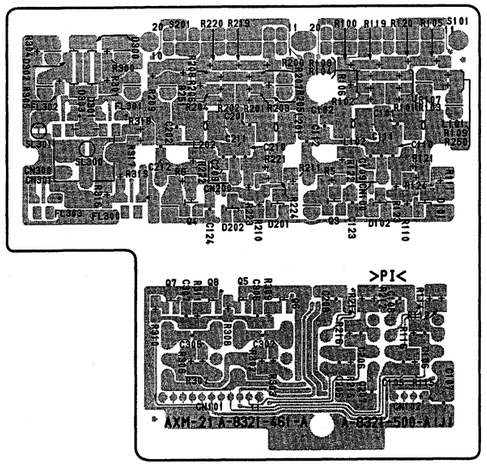

AXM-21 -B SIDE-
SUFFIX:-12

DVW-790WS (J) : S/N 30006 and Higher
DVW-790WS (SY) : S/N 10056 and Higher
DVW-790WSP : S/N 40156 and Higher

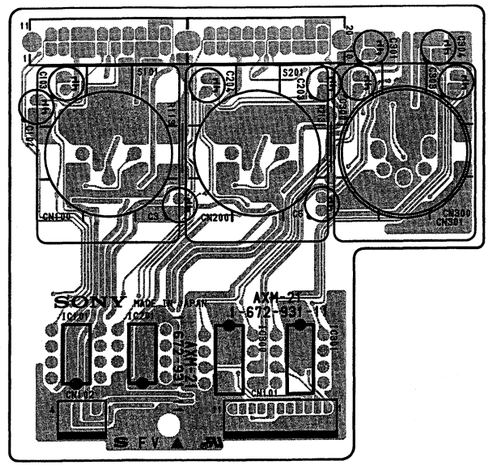

AXM-21 -A SIDE-
SUFFIX:-11

DVW-707 (J) : S/N 30001 through 30005
DVW-707 (SY) : S/N 10001 through 10045
DVW-707P : S/N 40001 through 40100

DVW-709WS (J) : S/N 30001 through 30005
DVW-709WS (SY) : S/N 10001 through 10065
DVW-709WSP : S/N 40001 through 40140

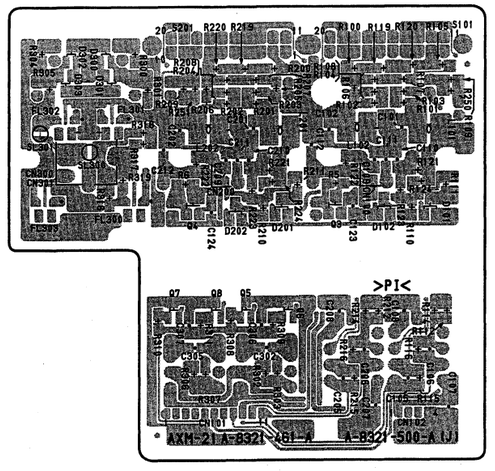

AXM-21 -B SIDE-
SUFFIX:-11

DVW-790WS (J) : S/N 30001 through 30005
DVW-790WS (SY) : S/N 10001 through 10055
DVW-790WSP : S/N 40001 through 40155

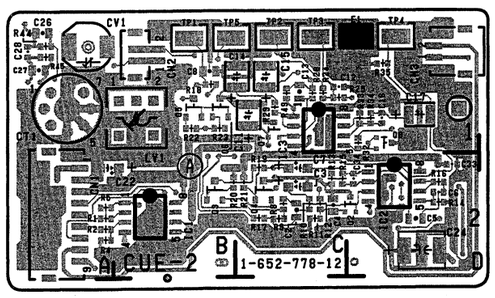

CUE-2 -A SIDE-
SUFFIX:-12

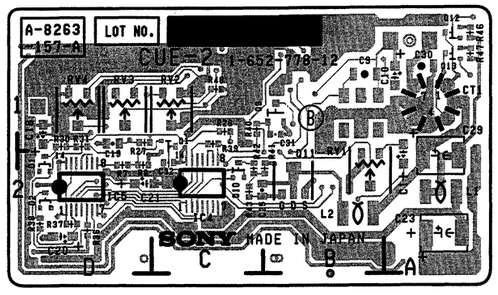

CUE-2 -B SIDE-
SUFFIX:-12

CUE-2 (1-652-778-12)
---

*:B SIDE

CN1	A2	C11	C1	C28	A1	IC5	*D2
CN2	B1	C12	C1	C29	*A2		
CN3	D1	C13	C1	C30	*A1	LV1	B1
		C14	C1	C31	*B1		
CT1	A1	C15	C1	C32	*C2	L1	*A2
		C16	D1	C33	D2	L2	*B2
CV1	A1	C17	D1	C34	D2		
		C18	*D1			Q1	*C1
C1	*A2	C19	*D1	D1	*D2	Q2	D2
C3	C2	C20	*D2	D2	*D2	Q3	B2
C4	C2	C21	*D2			Q4	C2
C5	D2	C22	A2	E1	D1	Q5	B1
C6	D2	C23	*A2			Q6	B1
C7	C2	C24	D2	IC1	B2	Q7	C1
C8	B1	C25	*C2	IC2	D2	Q8	D1
C9	*B1	C26	A1	IC3	C1	Q9	*B1
C10	*A1	C27	A1	IC4	*C2	Q10	*C2

Q11	*B2	R11	C2	R28	C1	R45	A1
Q12	*A1	R12	C2	R29	C1	R46	*A1
Q13	*A1	R13	C2	R30	*D1	R47	*A1
		R14	D2	R31	*D1		
RV1	*B2	R15	C2	R32	D1	TP1	B1
RV2	*C1	R16	D2	R33	D1	TP2	C1
RV3	*D1	R17	C2	R34	D1	TP3	C1
RV4	*D1	R18	B1	R35	D1	TP4	D1
		R19	C2	R36	*D2	TP5	B1
R1	A2	R20	B2	R37	*D2		
R2	A2	R21	C2	R38	*D2		
R4	A2	R22	B1	R39	*C1		
R5	A2	R23	B1	R40	*C1		
R6	*D2	R24	C1	R41	*B2		
R7	*D2	R25	C1	R42	*C2		
R9	C2	R26	*C1	R43	*C2		
R10	C2	R27	*D1	R44	A1		

5-28

SONY-SP1386 / DRUCK 198

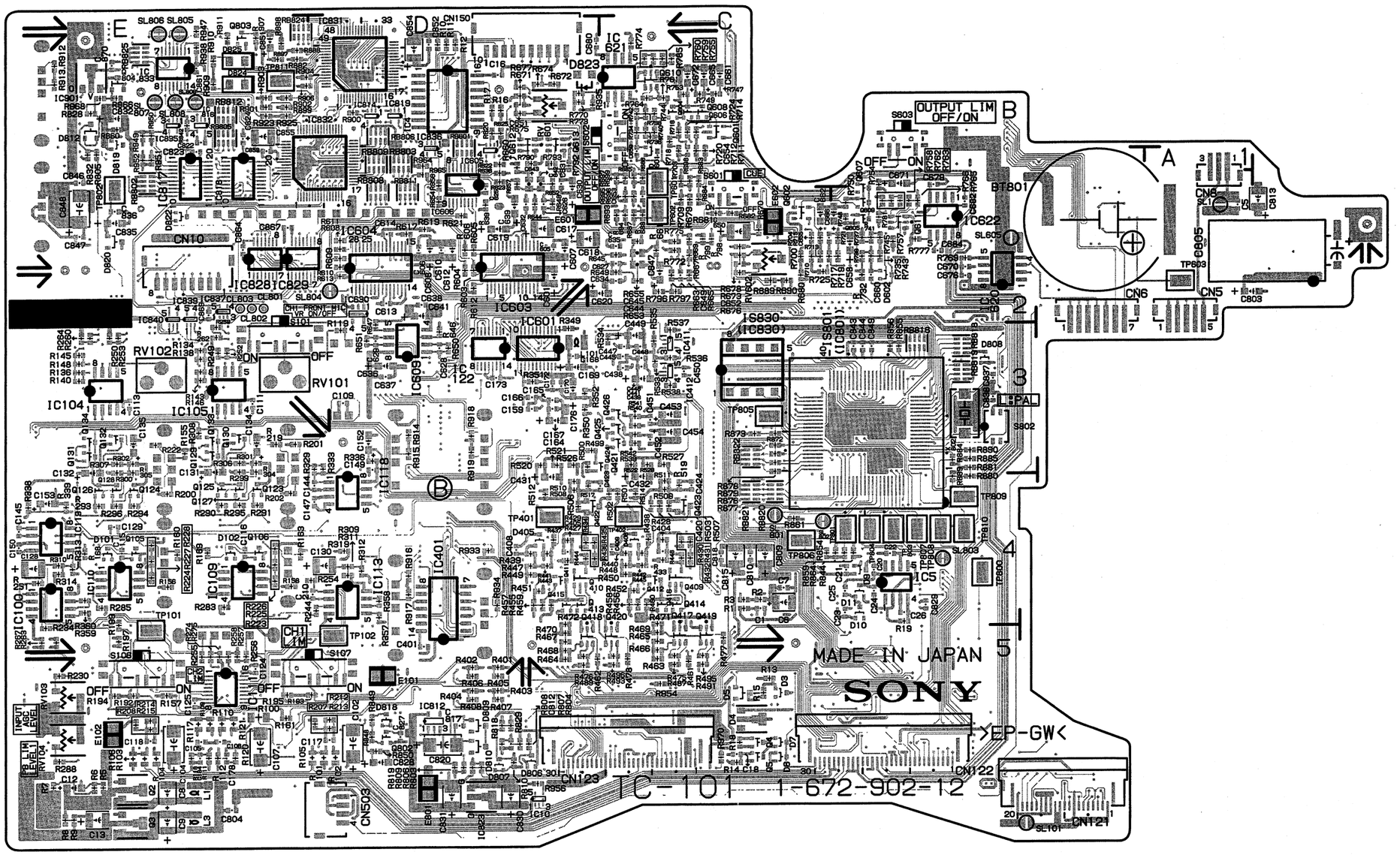

TC-101 -B SIDE-
SUFFIX:-12

IF-716, MA-94, VR-248

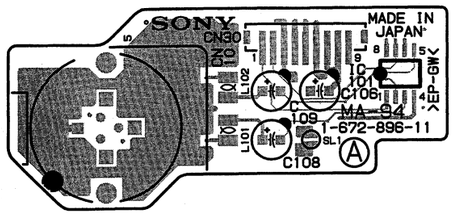

MA-94 -A SIDE-
SUFFIX:-11

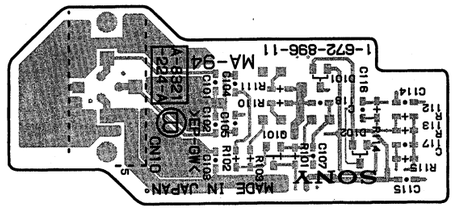

MA-94 -B SIDE-
SUFFIX:-11

VR-248 (1-672-901-11)
---

*:B SIDE

C1	*B2
C2	*B2
C3	*A2
C4	*A1
CN10	*A2
CN11	A2
CN15	A1
CN16	B1
R1	*C1
R2	*B2
R3	*B2
RV1	C1
RV2	*C1
RV3	C2
S1	B2

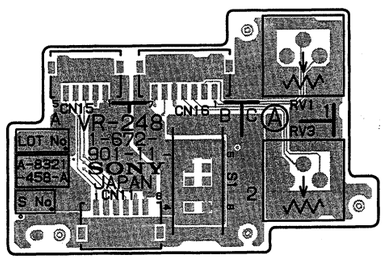

VR-248 -A SIDE-
SUFFIX:-11

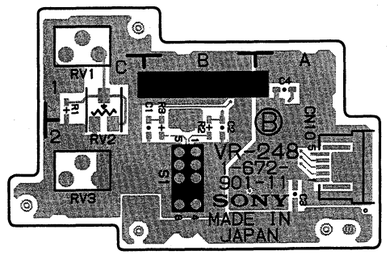

VR-248 -B SIDE-
SUFFIX:-11

IF-716 (1-672-895-11)
---

*:B SIDE

C1	*C2	R22	*C4
C2	*D3	R23	*B5
C3	*C3	R24	*B6
C4	*D3	R25	*C6
C5	*D3	R26	*C6
C6	*E3	R27	*C6
C7	*D2	R28	*C4
C8	*E3	R29	*E4
C9	E3	R30	*C4
C10	F3	R31	*E4
C11	*E5	R32	*B4
C12	*F4		
C13	*E3		
C14	E4		
C15	*E2		
C16	*E2		
C17	*E2		
C18	*F2		
C19	*D4		
C20	*E4		
CN100	B5		
CN200	D6		
CN300	B3		
CN400	D2		
CN500	E1		
CN600	F2		
D1	*E3		
D2	F4		
D101	*B4		
FB1	*B2		
FB2	*B2		
FB3	*B5		
FB4	*B5		
FB5	*B2		
FB6	*B2		
FB7	*B1		
FB8	*B1		
FB9	*B1		
FB10	*B5		
FB11	*B5		
IC1	C3		
IC2	D3		
IC3	E3		
IC4	F2		
IC101	B5		
IC102	D4		
IC103	C4		
L1	F1		
L2	E2		
Q1	*E2		
Q2	*F3		
Q101	*B4		
R1	*C3		
R2	*C3		
R3	*D3		
R4	*C3		
R5	*D2		
R6	*D2		
R7	*D3		
R8	*D2		
R9	*E4		
R10	*E4		
R11	*E4		
R12	*E3		
R13	*E3		
R14	*E2		
R15	*B4		
R16	*B4		
R17	*B4		
R18	*D4		
R19	*D4		
R20	*D4		
R21	*C4		

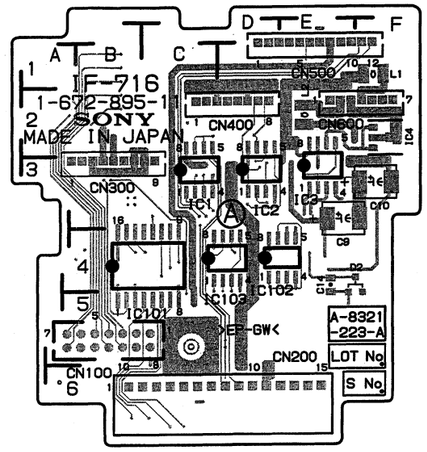

IF-716 -A SIDE-
SUFFIX:-11

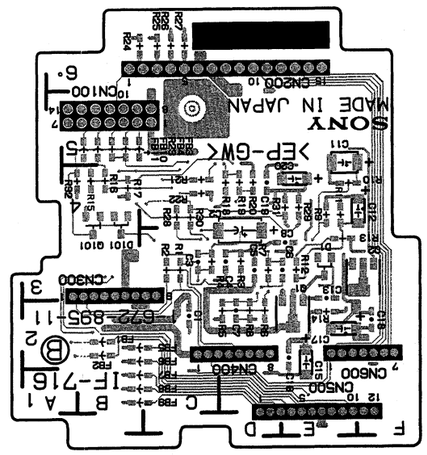

IF-716 -B SIDE-
SUFFIX:-11

5-29

CNB-11, DC-101, DC-106, PS-533

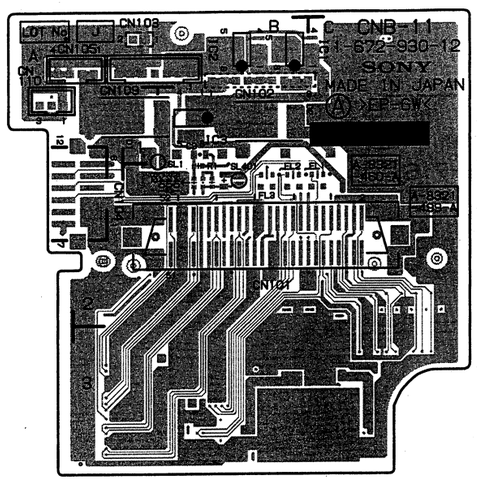

CNB-11 -A SIDE-
SUFFIX:-12

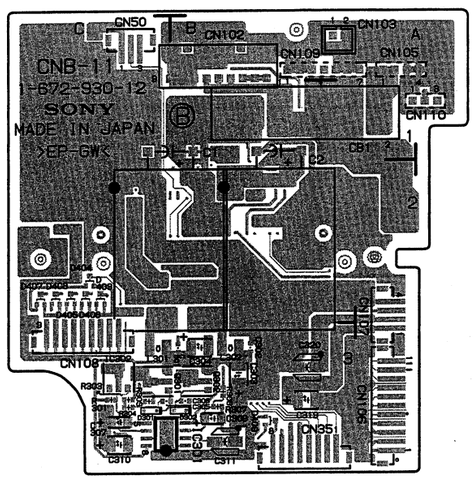

CNB-11 -B SIDE-
SUFFIX:-12

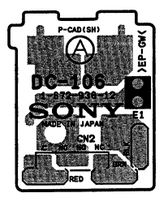

DC-106 -A SIDE-
SUFFIX:-12

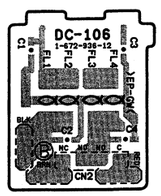

DC-106 -B SIDE-
SUFFIX:-12

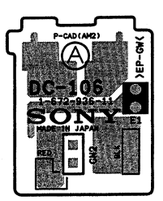

DC-106 -A SIDE-
SUFFIX:-11

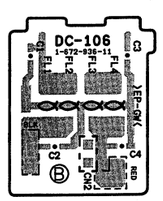

DC-106 -B SIDE-
SUFFIX:-11

CNB-11 (1-672-930-12)

*:B SIDE

C1	*B1	CN35	*B3	D404	*C2	L302	*B3
C2	*B1	CN50	*C1	D405	*C2		
C3	B1	CN101	B2	D406	*C2	Q301	*C3
C301	*B3	CN102	*B1	D407	*C2	Q302	*B3
C302	*B3	CN103	*A1	D408	*C2		
C303	*B3	CN104	A2	D409	*B3	R1	B2
C304	*B3	CN105	A1			R2	B2
C305	*C3	CN106	*A3	FL1	C2	R301	*C3
C306	*B3	CN107	*A2	FL2	B2	R303	*C3
C307	*C3	CN108	*C3	FL3	B2	R304	*C3
C309	*B3	CN109	A1			R305	*C3
C310	*C3	CN110	A1	IC1	B1	R306	*B3
C311	*B3			IC2	B1	R307	*B3
C319	*B3	D1	A1	IC3	B1	R401	B2
C320	*B3	D2	B1	IC301	*B3	R402	B2
C401	B2	D301	*C3	IC302	*C3		
		D302	*B3			SL1	B1
CB1	*A1	D403	*C2	L301	*C3	SL401	B2

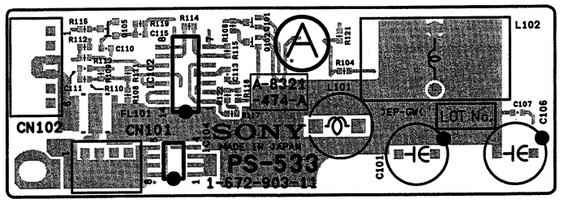

PS-533 -A SIDE-
SUFFIX:-11

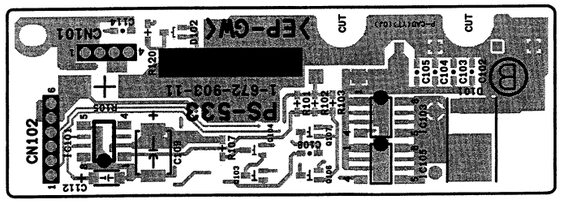

PS-533 -B SIDE-
SUFFIX:-11

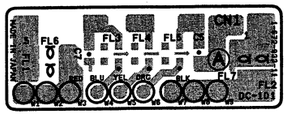

DC-101 -A SIDE-
SUFFIX:-11

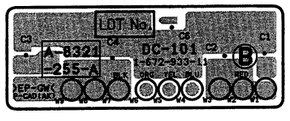

DC-101 -B SIDE-
SUFFIX:-11

5-30

MB-810 (1-672-893-11)
---

*:B SIDE

C1	J2
C2	J2
C3	J2
C4	J2
C5	J2
C6	J3
CL1	J2
CL2	J2
CL3	G3
CL4	G3
CL5	E3
CL6	F3
CL7	F3
CL8	G3
CL9	J2
CN1	B2
CN2	F2
CN3	B1
CN4	F1
CN5	C1
CN6	F1
CN10	*A2
CN22	*C2
CN23	*E2
CN50	*A1
CN60	A2
CN101	*J1
E1	H3
IC1	J2
L1	J2
L2	J2
Q1	J3
R1	J2
R2	J3
R3	J3
R4	J2
R5	J3
R6	J3
R7	J2
R8	J1
R9	J1

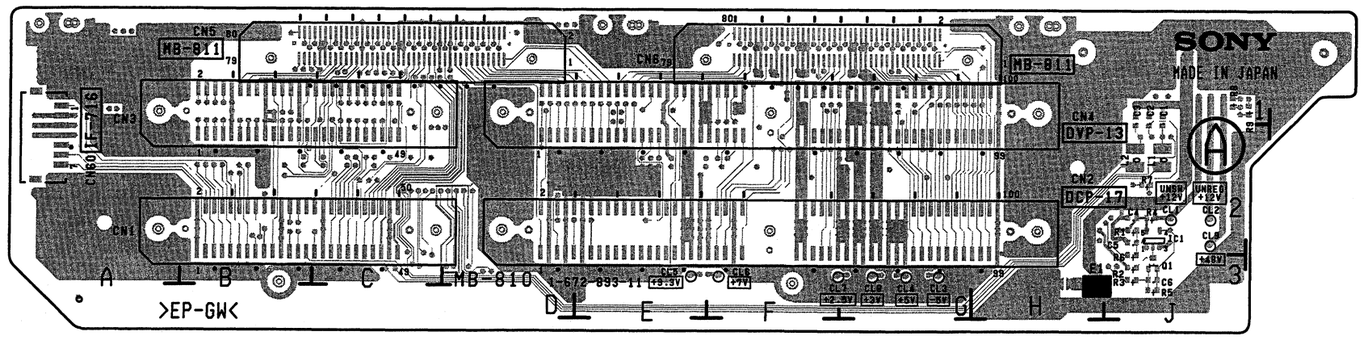

MB-810 -A SIDE-
SUFFIX:-11

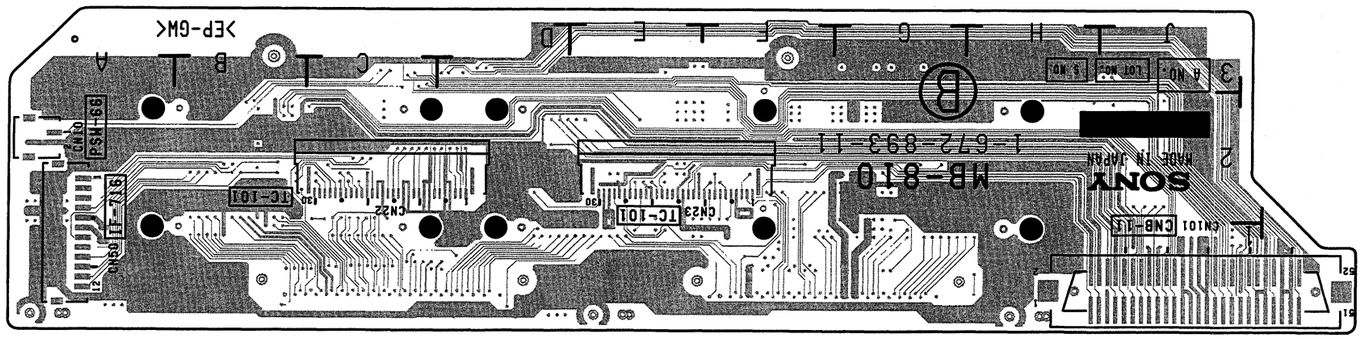

MB-810 -B SIDE-
SUFFIX:-11

MB-811 (1-672-894-12)
---

*:B SIDE

A18	C2	D10	G6	R30	E2
A19	F2	D11	G6	R31	E2
		D12	G6	R32	F3
C1	E2			R33	F2
C2	C1	E1	F2	R34	C2
C3	C1			R35	E2
C4	E6	F101	H6	R36	C2
C5	E6			R37	C2
C6	E6	IC1	F2	R90	G6
C7	E6	IC2	C5	R100	G6
C8	F6	IC3	D2	R103	E2
C9	E6	IC5	F3	R104	E2
C10	F6	IC6	F2	R111	G6
C11	B2	IC7	F3	R112	G5
C12	B2	IC10	E2	R113	G5
C13	B2	IC11	E2	R115	G6
C14	B2	IC101	D2	R116	G6
C15	B2	IC102	D1	R117	G6
C16	D5	IC103	E1	R118	G6
C17	C5	IC105	E1	R120	G6
C18	C5			R121	G6
C19	C5	Q1	D2	R1114	G6
C20	F2	Q2	D2		
C21	G2	Q3	C2	RB18	F3
C22	G3	Q4	D2	RB20	E2
C23	F3	Q5	D2	RB21	E2
C24	C2	Q6	D2	RB103	E3
C25	G3	Q7	D2	RB104	F2
C26	E2	Q8	D2	RB105	G2
C27	E2	Q9	D2	RB106	G2
C28	D5	Q10	D5	RB107	F2
C29	B5	Q11	B2	RB108	E2
C30	D2	Q12	B2	RB109	G2
C31	C2	Q13	C2	RB110	G2
C32	A3	Q14	C2		
C33	H5	Q15	C2		
C201	F2	Q16	D1		
C202	E2	Q20	G6		
C203	F2	Q21	G6		
C204	F2	Q22	G6		
		Q23	G5		
CL2	H6	Q24	G6		
CL5	F2	Q25	G5		
CL6	G2	Q26	G6		
CL7	F3				
CL8	F2	R1	D2		
CL9	F2	R2	D2		
CL220	E2	R3	D2		
CL221	E2	R4	D2		
CL229	E2	R5	C2		
		R6	C2		
CN1	J6	R7	C2		
CN5	C6	R8	D1		
CN6	E6	R9	D1		
CN12	*A4	R10	D5		
CN14	H3	R11	E1		
CN15	H3	R12	E1		
CN16	J3	R13	D5		
CN20	*J4	R14	C5		
CN21	B6	R15	C5		
CN23	C1	R16	C5		
CN31	B2	R17	D5		
CN32	B2	R18	C5		
CN33	A3	R19	C5		
CN40	A5	R20	C2		
CN51	J2	R21	D5		
CN53	J3	R22	D5		
CN54	J5	R23	D5		
CN55	G2	R24	E1		
CN109	J5	R25	E2		
		R26	E2		
D1	B2	R27	F2		
D2	B2	R28	F3		
D3	D5	R29	E2		

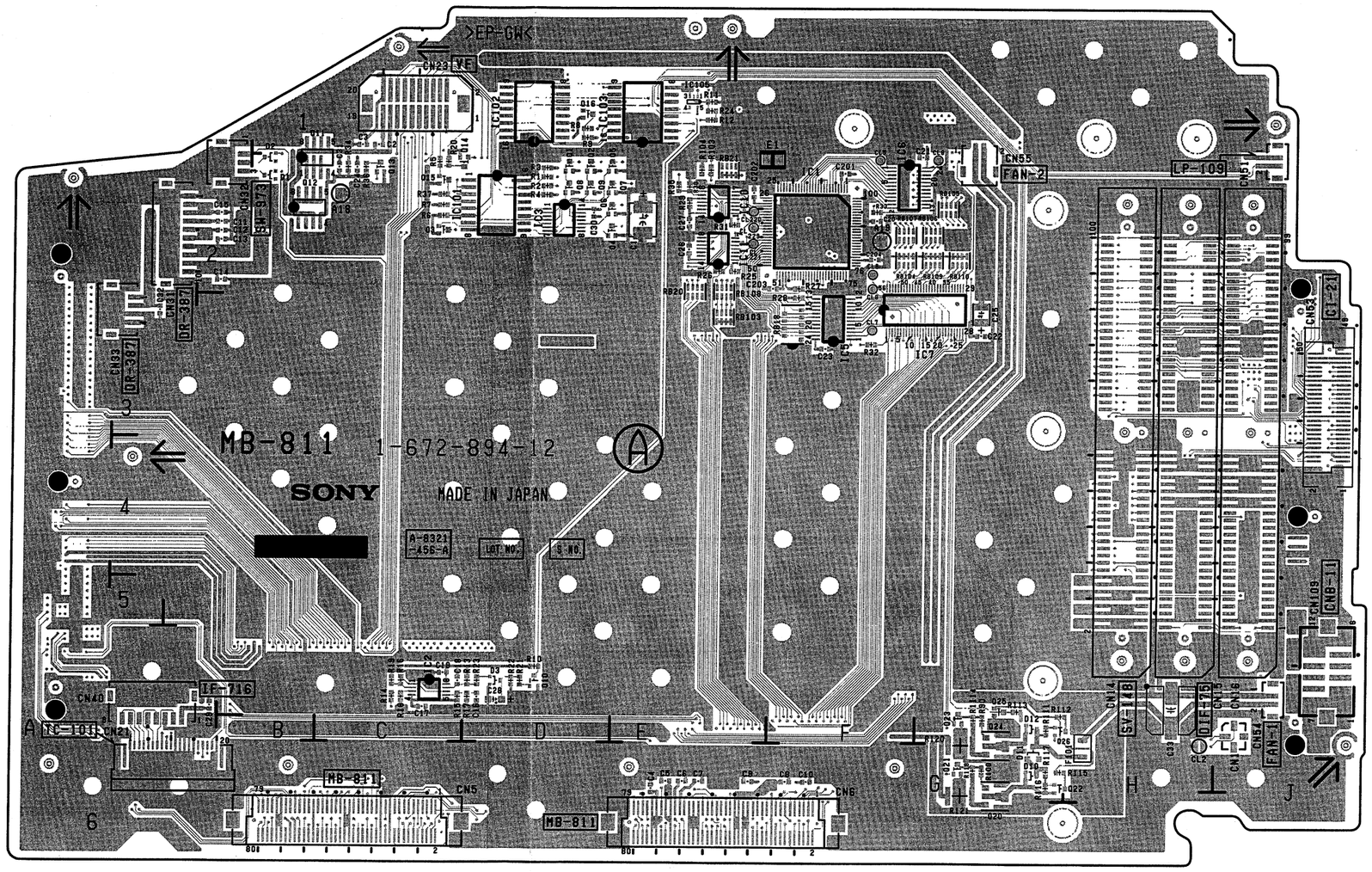

MB-811 -A SIDE-
SUFFIX:-12

DVW-707 (J) : S/N 30006 and Higher
DVW-707 (SY) : S/N 10011 and Higher
DVW-707P : S/N 40021 and Higher

DVW-709WS (J) : S/N 30006 and Higher
DVW-709WS (SY) : S/N 10026 and Higher
DVW-709WSP : S/N 40071 and Higher

DVW-790WS (J) : S/N 30006 and Higher
DVW-790WS (SY) : S/N 10016 and Higher
DVW-790WSP : S/N 40061 and Higher

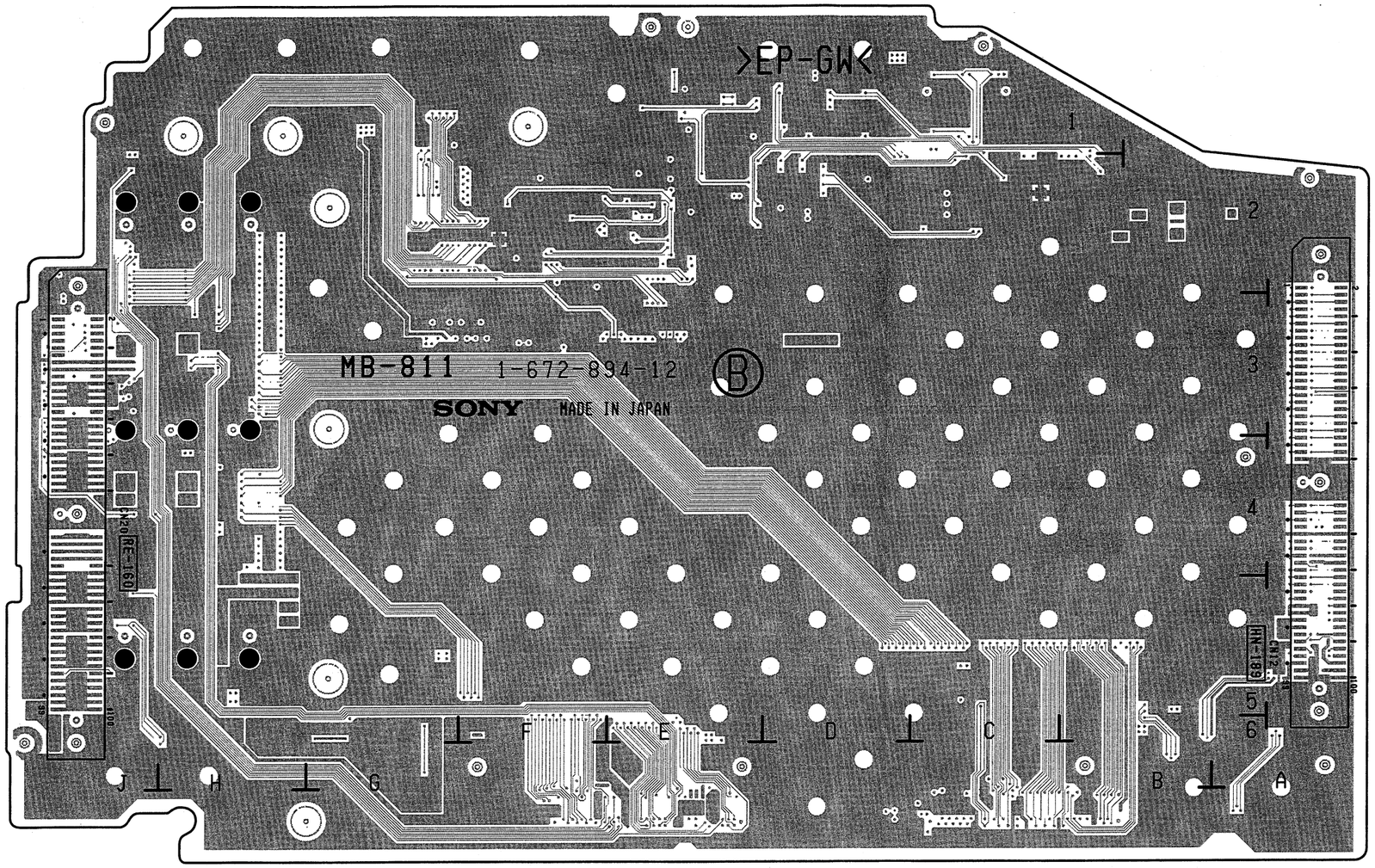

MB-811 -B SIDE-
SUFFIX:-12

MB-811 (1-672-894-11)
---

*:B SIDE

C1	E2	E1	F2	R33	G2
C2	C1			R34	C2
C3	C1	F101	G6	R35	E2
C4	E6			R36	C2
C5	E6	IC1	F2	R37	C2
C6	E6	IC2	C5	R90	G6
C7	E6	IC3	D2	R100	G6
C8	F6	IC5	F3	R103	E2
C9	E6	IC6	F2	R104	E2
C10	F6	IC7	F3	R111	G6
C11	B2	IC10	E2	R112	G5
C12	B2	IC11	E2	R113	G5
C13	B2	IC101	D2	R115	G6
C14	B2	IC102	D1	R116	G6
C15	B2	IC103	E1	R117	G6
C16	D5	IC105	E1	R118	G6
C17	C5			R120	G6
C18	C5	Q1	D2	R121	G6
C19	C5	Q2	D2	R1114	G6
C20	G2	Q3	C2		
C21	G2	Q4	D2	RB18	F3
C22	G3	Q5	D2	RB20	E2
C23	F3	Q6	D2	RB21	E2
C24	C2	Q7	D2	RB103	E3
C25	G3	Q8	D2	RB104	F2
C26	E2	Q9	D2	RB105	G2
C27	E2	Q10	D5	RB106	G2
C28	D5	Q11	B2	RB107	F2
C29	B5	Q12	B2	RB108	E2
C30	D2	Q13	C2	RB109	G2
C31	C2	Q14	C2	RB110	G2
C32	A3	Q15	C2		
C201	F2	Q16	D1		
C202	E2	Q20	G6		
C203	F2	Q21	G6		
C204	F2	Q22	G6		
		Q23	G5		
CL2	H6	Q24	G6		
CL5	F2	Q25	G5		
CL6	G2	Q26	G6		
CL7	F3				
CL8	F2	R1	D2		
CL9	F2	R2	D2		
CL220	E2	R3	D2		
CL221	E2	R4	D2		
CL229	E2	R5	C2		
		R6	C2		
CN1	J6	R7	C2		
CN5	C6	R8	D1		
CN6	E6	R9	D1		
CN12	*A4	R10	D5		
CN14	H3	R11	E1		
CN15	H3	R12	E1		
CN16	J3	R13	D5		
CN20	*J4	R14	C5		
CN21	B6	R15	C5		
CN23	C1	R16	C5		
CN31	B2	R17	D5		
CN32	B2	R18	C5		
CN33	A3	R19	C5		
CN40	A5	R20	C2		
CN51	J2	R21	D5		
CN53	J3	R22	D5		
CN54	J5	R23	D5		
CN55	G2	R24	E1		
CN109	J5	R25	E2		
		R26	E2		
D1	B2	R27	F2		
D2	B2	R28	F3		
D3	D5	R29	E2		
D10	G6	R30	E2		
D11	G6	R31	E2		
D12	G6	R32	F3		

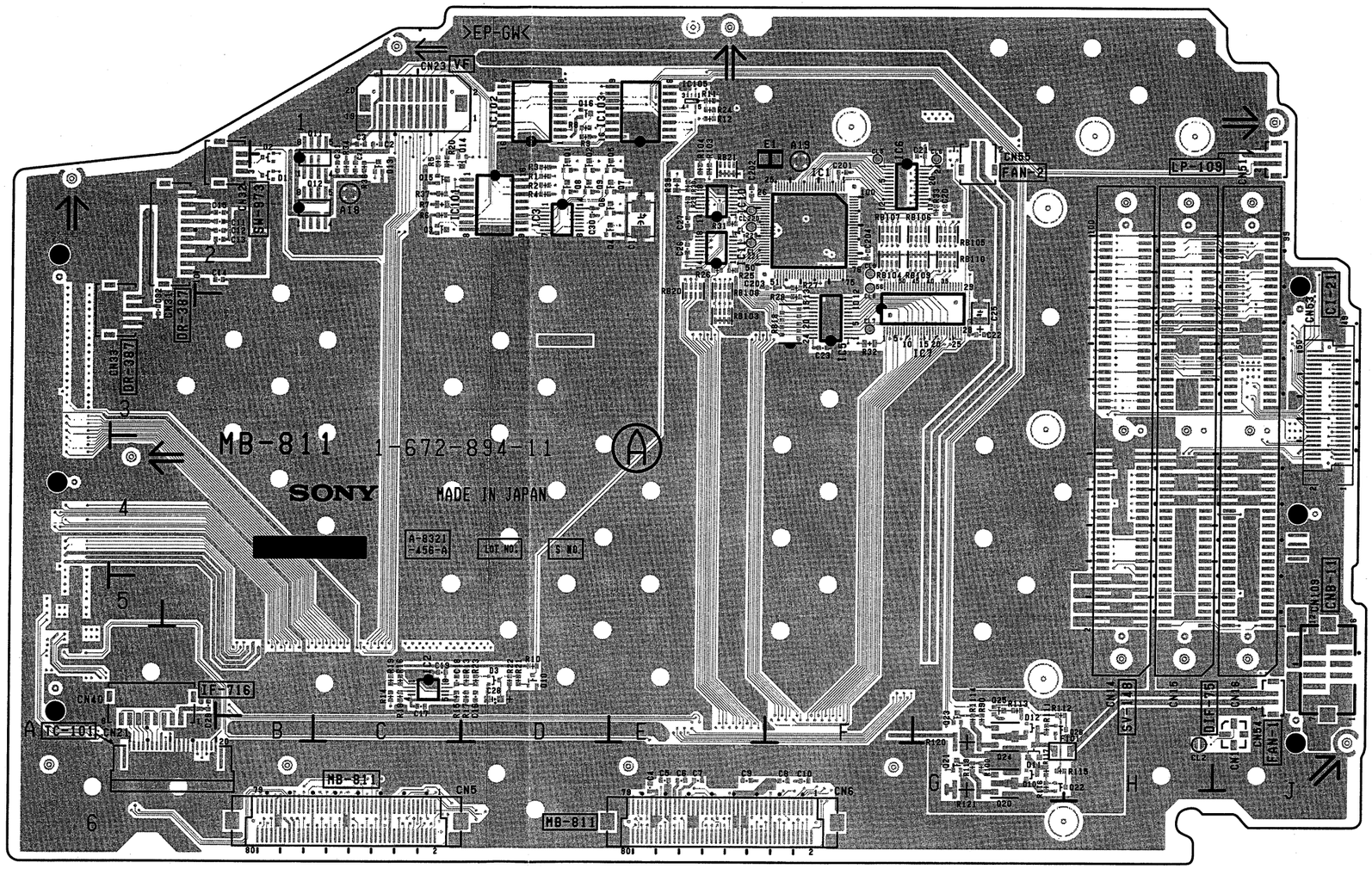

Lot No. : 810 through 812

MB-811 -A SIDE-
SUFFIX:-11

DVW-707 (J) : S/N 30001 through 30005
DVW-707 (SY) : S/N 10001 through 10010
DVW-707P : S/N 40001 through 40020

DVW-709WS (J) : S/N 30001 through 30005
DVW-709WS (SY) : S/N 10001 through 10025
DVW-709WSP : S/N 40001 through 40070

DVW-790WS (J) : S/N 30001 through 30005
DVW-790WS (SY) : S/N 10001 through 10015
DVW-790WSP : S/N 40001 through 40060

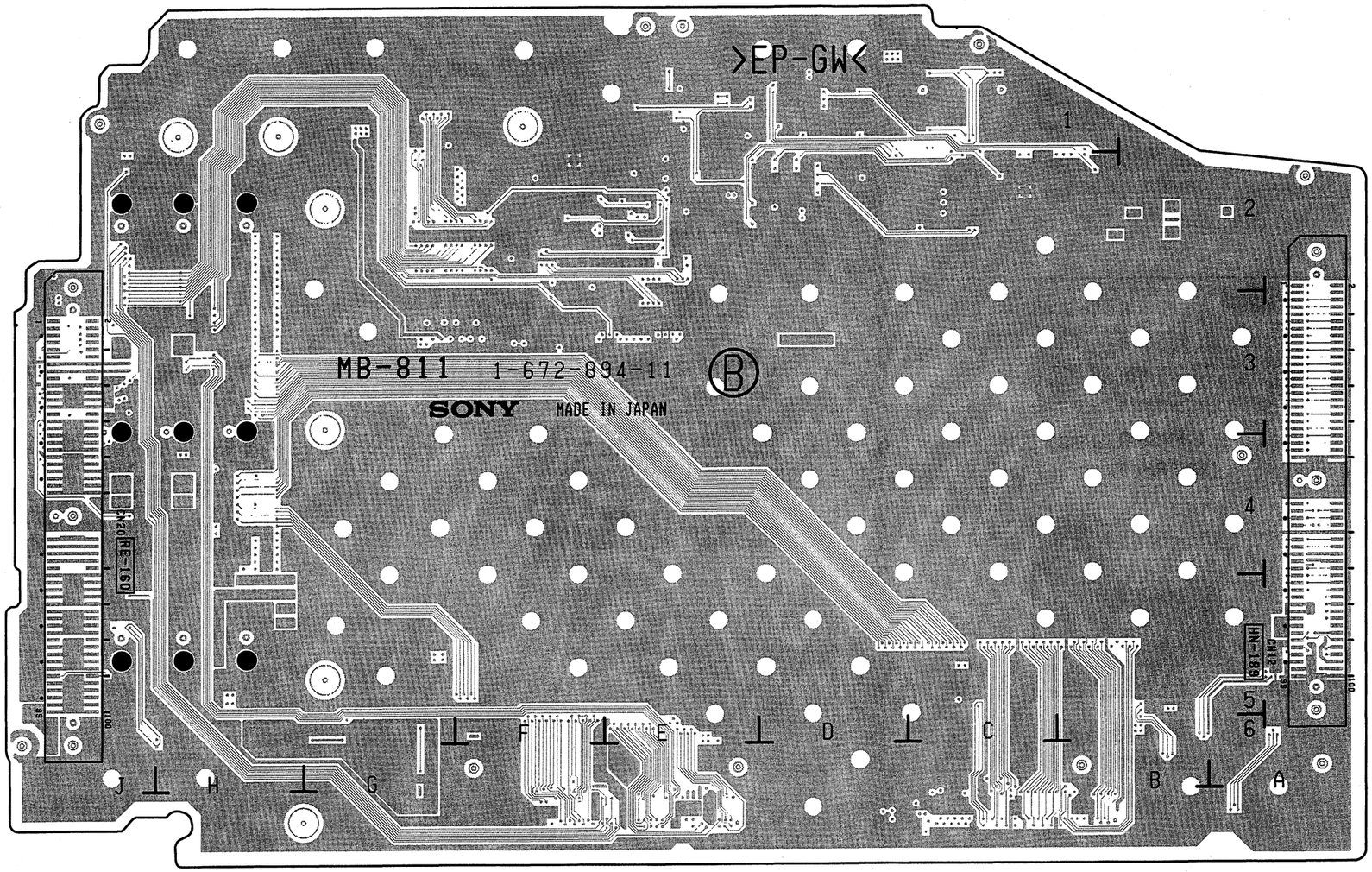

MB-811 -B SIDE-
SUFFIX:-11

CP-329, HP-93, IO-178, KY-293, LP-109, LP-111

```
---------------------
CP-329 (1-672-899-11)
---------------------

*:B SIDE

C101    *D1
C102    *C2
C103    *C2
C104    *B1
C105    *B2
C106    *B2
C107    *A1

CN1      C2

IC101    D1
IC102    A2

R13     *D2
R14     *D1
R100    *D1
R101    *D2
R102    *C2
R103    *C1
R104    *C1
R105    *C1
R106    *C1
R107    *B1
R108    *B1
R110    *A1
R111    *A1
R112    *B1

RB101    D2
RB102    D2
RB103    B2
RB104    B2

S100     D1
S101     C2
S102     C1
S103     B2
S104     B1
S105     A1
S106     A1
```

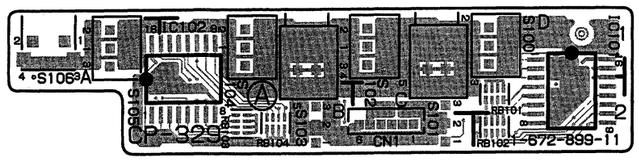

CP-329 -A SIDE-
SUFFIX:-11

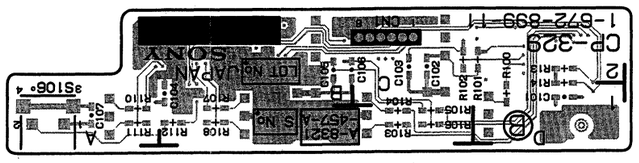

CP-329 -B SIDE-
SUFFIX:-11

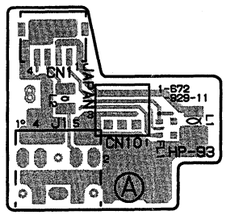

HP-93 -A SIDE-
SUFFIX:-11

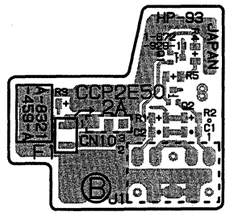

HP-93 -B SIDE-
SUFFIX:-11

```
---------------------
IO-178 (1-672-905-11)
---------------------

*:B SIDE

C1       C1

CN1      B1
CN2     *D2
CN3     *C1
CN4     *B2
CN5     *A1

FL1      D2
FL2      D1
FL3      D1
FL4      B2
FL5      B1

R1       D2
R2       B2
R3       B2

SL1      B1
```

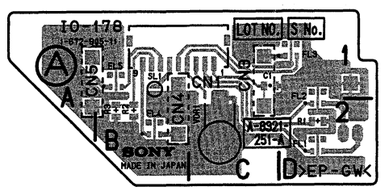

IO-178 -A SIDE-
SUFFIX:-11

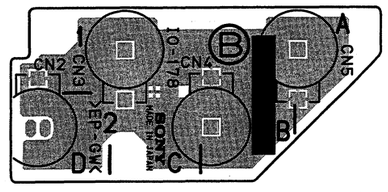

IO-178 -B SIDE-
SUFFIX:-11

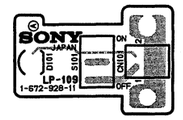

LP-109 -A SIDE-
SUFFIX:-11

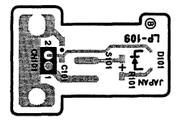

LP-109 -B SIDE-
SUFFIX:-11

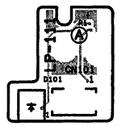

LP-111 -A SIDE-
SUFFIX:-12

LP-111 -B SIDE-
SUFFIX:-12

DVW-707 (J) : S/N 30006 and Higher
DVW-707 (SY) : S/N 10046 and Higher
DVW-707P : S/N 40101 and Higher
DVW-709WS (J) : S/N 30006 and Higher
DVW-709WS (SY) : S/N 10066 and Higher
DVW-709WSP : S/N 40141 and Higher
DVW-790WS (J) : S/N 30006 and Higher
DVW-790WS (SY) : S/N 10056 and Higher
DVW-790WSP : S/N 40156 and Higher

LP-111 -A SIDE-
SUFFIX:-11

LP-111 -B SIDE-
SUFFIX:-11

DVW-707 (J) : S/N 30001 through 30005
DVW-707 (SY) : S/N 10001 through 10045
DVW-707P : S/N 40001 through 40100
DVW-709WS (J) : S/N 30001 through 30005
DVW-709WS (SY) : S/N 10001 through 10065
DVW-709WSP : S/N 40001 through 40140
DVW-790WS (J) : S/N 30001 through 30005
DVW-790WS (SY) : S/N 10001 through 10055
DVW-790WSP : S/N 40001 through 40155

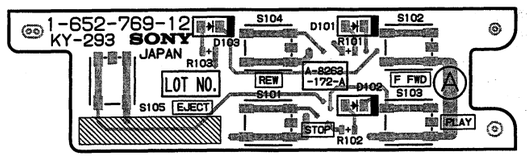

KY-293 -A SIDE-
SUFFIX:-12

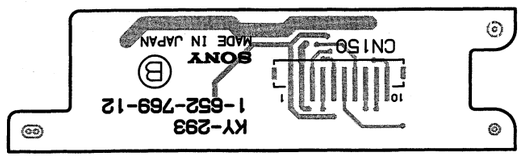

KY-293 -B SIDE-
SUFFIX:-12

5-34

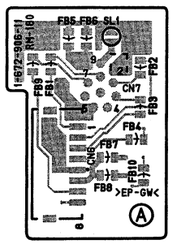

RM-180 -A SIDE-
SUFFIX:-11

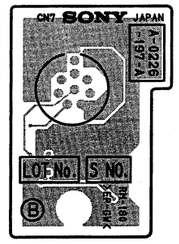

RM-180 -B SIDE-
SUFFIX:-11

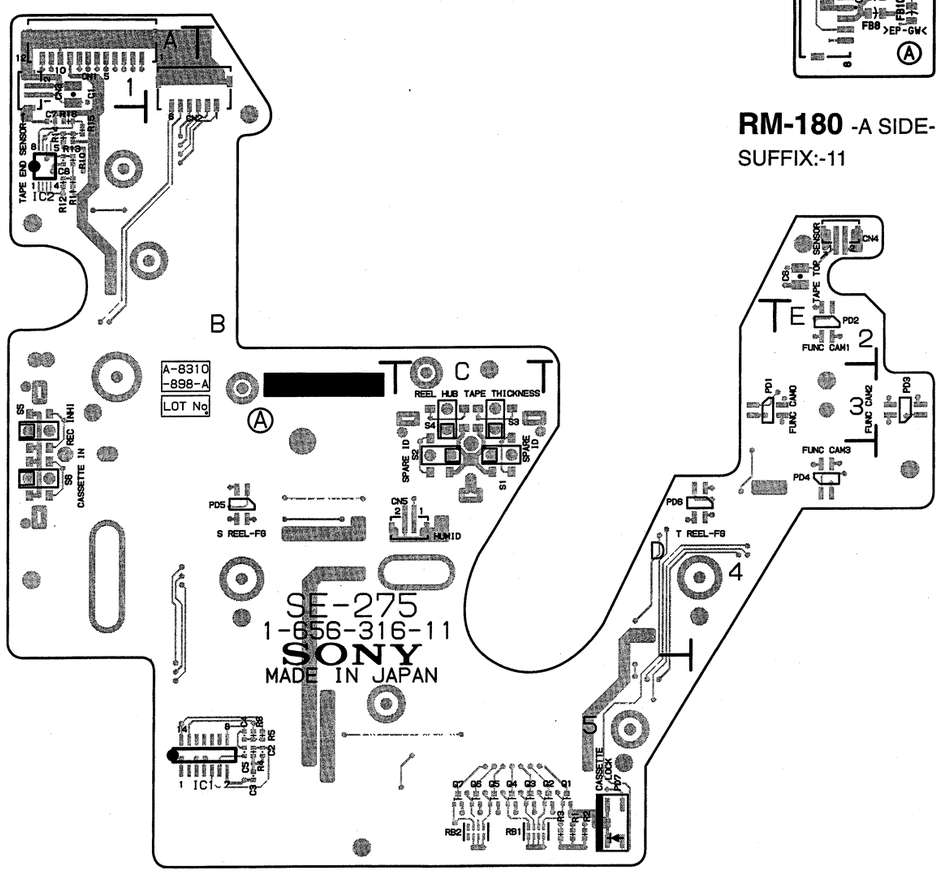

SE-275 -A SIDE-
SUFFIX:-11

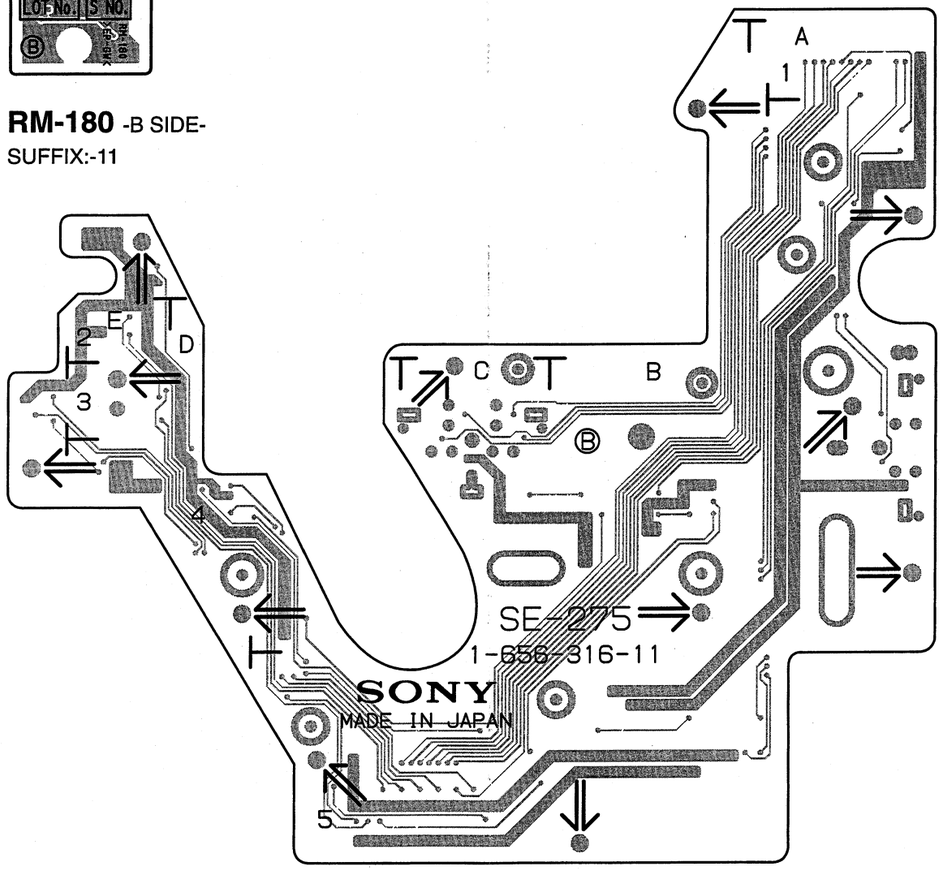

SE-275 -B SIDE-
SUFFIX:-11

SE-275 (1-656-316-11)
---

*:B SIDE

CN1	A1	IC1	A5	Q4	C5	R10	A2
CN2	A1	IC2	A2	Q5	C5	R11	A2
CN3	A1			Q6	C5	R12	A2
CN4	E2	PD1	D3	Q7	C5	R13	A2
CN5	C4	PD2	E2			R14	A2
		PD3	E3	RB1	C5	R15	A2
C1	A1	PD4	E4	RB2	C5	R16	A2
C2	B5	PD5	B4				
C3	B5	PD6	D4	R1	D5	S1	C4
C4	B5	PD7	D5	R2	D5	S2	C4
C5	B5			R3	D5	S3	C3
C6	E2	Q1	D5	R4	B5	S4	C3
C7	A2	Q2	D5	R5	B5	S5	A3
C8	A2	Q3	C5	R6	B5	S6	A4

SW-971, SW-972, SW-973, SW-983, VSE-32

SW-971 (1-672-907-11)
---

*:B SIDE

C201	*B1
C202	*A1
C203	*A1
C204	*B1
C205	*A1
C206	*A2
C207	*A2
C208	*B2
CN10	B1
CN20	*A2
RV201	B2
S201	A2
S202	B1
S203	A1

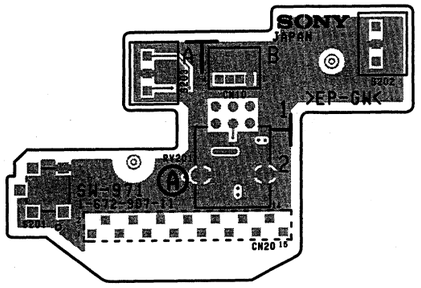

SW-971 -A SIDE-
SUFFIX:-11

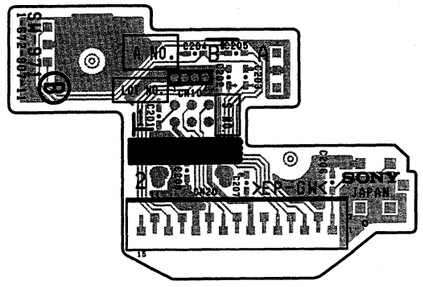

SW-971 -B SIDE-
SUFFIX:-11

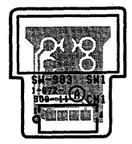

SW-983 -A SIDE-
SUFFIX:-11

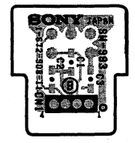

SW-983 -B SIDE-
SUFFIX:-11

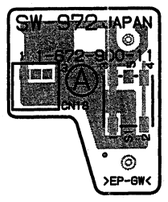

SW-972 -A SIDE-
SUFFIX:-11

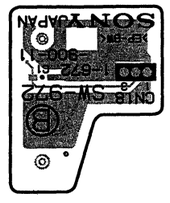

SW-972 -B SIDE-
SUFFIX:-11

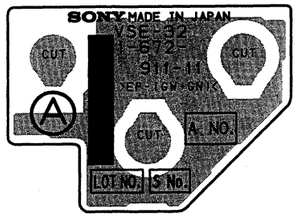

VSE-32 -A SIDE-
SUFFIX:-11

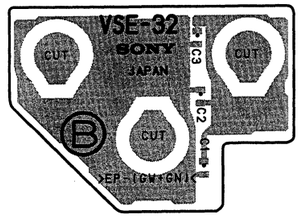

VSE-32 -B SIDE-
SUFFIX:-11

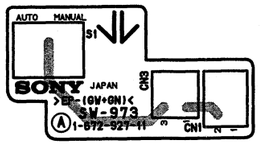

SW-973 -A SIDE-
SUFFIX:-11

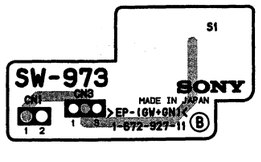

SW-973 -B SIDE-
SUFFIX:-11

5-36

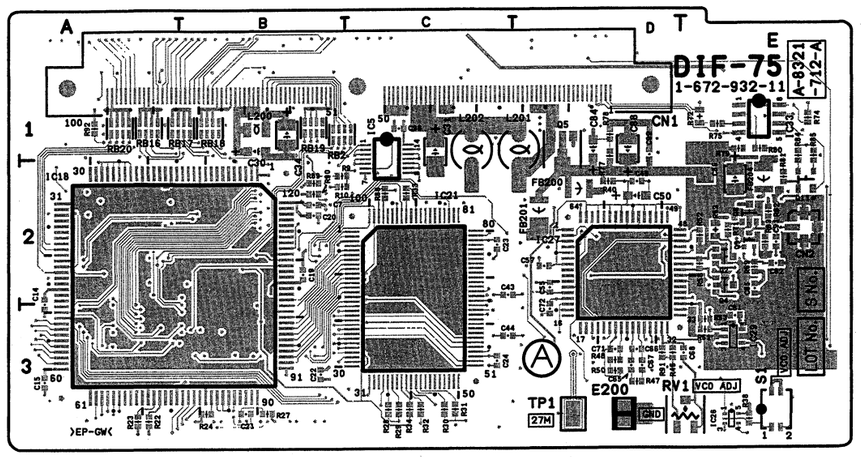

DIF-75 -A SIDE-
SUFFIX:-11

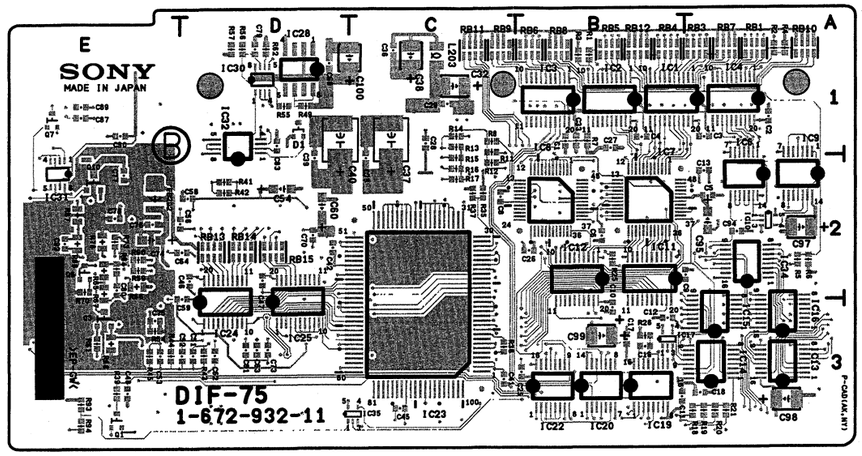

DIF-75 -B SIDE-
SUFFIX:-11

DIF-75 (1-672-932-11)
---

*:B SIDE

C1	*B1	C40	*D1	C79	*D1	IC5	C2	Q3	*E3	R30	C3	R69	E2	RB13	*D2
C2	*A1	C41	*C3	C80	*E2	IC6	*A2	Q4	E2	R31	C3	R70	*E2	RB14	*D2
C3	*A1	C42	*D2	C81	E3	IC7	*B2	Q5	D1	R32	C3	R71	E2	RB15	*D2
C4	*B1	C43	C2	C82	E2	IC8	*B2	Q6	*E2	R33	C2	R72	E1	RB16	A1
C5	*A2	C44	C3	C83	*D1	IC9	*A2	Q7	*E1	R34	C3	R73	*E2	RB17	B1
C6	*B2	C45	*C3	C84	D1	IC10	*A2	Q8	E2	R35	*C2	R74	E1	RB18	B1
C7	B2	C46	*D2	C85	E2	IC11	*B2	Q9	E2	R36	*C3	R75	E1	RB19	B1
C8	*C2	C47	*D2	C86	E2	IC12	*B2	Q10	*E2	R37	*C2	R76	*E2	RB20	A1
C9	*A2	C48	*E3	C87	*E1	IC13	*A3	Q11	E2	R38	E3	R77	D1		
C10	*B3	C49	D2	C88	D1	IC14	*A3			R39	*E3	R78	D1	RV1	E3
C11	*B3	C50	D2	C89	*E1	IC15	*A3	R1	*B1	R40	D2	R79	E1		
C12	*B3	C51	*D3	C90	*E1	IC16	*A3	R2	*A1	R41	*D2	R80	E1	S1	E3
C13	*A2	C52	*D3	C91	E2	IC17	*B3	R3	*B1	R42	*D2	R81	E2		
C14	A3	C53	*E3	C92	D1	IC18	A2	R4	*A1	R43	*D3	R82	E2	TP1	D3
C15	A3	C54	*D2	C93	*E2	IC19	*B3	R5	*A2	R44	*E3	R83	E2		
C16	*B3	C55	D2	C94	*A2	IC20	*B3	R6	*A2	R45	*E3	R84	E1		
C17	*B3	C56	*D2	C95	*A2	IC21	C2	R7	*B1	R46	D3	R85	E1		
C18	*A3	C57	D2	C96	C1	IC22	*B3	R8	*C1	R47	D3	R86	*E2		
C19	B2	C58	*D2	C97	*A2	IC23	*C3	R9	B2	R48	D3	R87	*E2		
C20	B2	C59	*D2	C98	*A3	IC24	*D3	R10	B2	R49	*D1	R88	C2		
C21	B3	C60	*D2	C99	*B3	IC25	*D3	R11	*C1	R50	D3	R89	B2		
C22	B3	C61	*D3	C100	*C1	IC26	E3	R12	*C2	R51	E3	R90	B2		
C23	C2	C62	*D3			IC27	D2	R13	*C1	R52	E2	R91	D3		
C24	C3	C63	*D3	CN1	C1	IC28	*D1	R14	*C1	R53	E3	R92	A1		
C25	*B3	C64	*D2	CN2	E2	IC29	E3	R15	*C2	R54	*E3	R93	*E3		
C26	*B2	C65	D3			IC30	*D1	R16	*C2	R55	*D1	R94	*E3		
C27	*B1	C66	D3	D1	*D1	IC31	*E2	R17	*C2	R56	*D1				
C28	*C1	C67	D3			IC32	*D1	R18	*A3	R57	*D1	RB1	*A1		
C29	*C1	C68	E3	E200	D3	IC33	E1	R19	*A3	R58	E2	RB2	B1		
C30	B1	C69	*D1			IC34	*A2	R20	*A3	R59	*E2	RB3	*A1		
C31	C1	C70	*D2	FB200	D2	IC35	*C3	R21	*A3	R60	*E2	RB4	*B1		
C32	*C1	C71	D3	FB201	D2			R22	A3	R61	*E3	RB5	*B1		
C33	*B1	C72	D3	FB202	*E2	L200	B1	R23	A3	R62	*D1	RB6	*B1		
C34	B1	C73	*D3	FB204	E2	L201	D1	R24	B3	R63	E2	RB7	*A1		
C35	*C2	C74	*E2			L202	C1	R25	*B2	R64	*E2	RB8	*B1		
C36	*C1	C75	*E3	IC1	*B1	L203	*C1	R26	*B3	R65	*E2	RB9	*C1		
C37	*C1	C76	*E2	IC2	*B1			R27	B3	R66	*E2	RB10	*A1		
C38	*C1	C77	*E2	IC3	*B1	Q1	*E3	R28	C3	R67	*E2	RB11	*C1		
C39	*D2	C78	*E2	IC4	*A1	Q2	E2	R29	C3	R68	*E3	RB12	*B1		

FM-65 (1-672-937-12)
---

*:B SIDE

C1	*B2	R2	A1
C2	*A1	R4	A1
C3	A2	R7	A1
C4	B1	R10	A2
C5	*B1	R19	A1
C6	B1	R49	A1
C7	B2	R51	A1
C9	A1	R52	A2
C17	*B2		
C18	A1	RB1	A1
C19	*A1		
C21	A2		
C22	A1		
C27	A1		
C29	*B2		
C30	*A2		
C101	*A1		
C102	*A2		
C104	*A2		
C201	B1		
C204	*A2		
C301	B2		
C302	*B2		
C304	*B1		
CN1	A2		
IC1	B1		
IC2	B1		
IC3	B1		
IC4	*B1		
IC5	*B1		
IC6	*B1		
IC7	*B1		
IC8	*B1		
IC9	*A1		
IC10	A1		
IC11	A1		
IC12	*A1		
IC15	*A1		
IC16	A1		
IC17	*A1		
IC18	*B2		
IC19	*A2		
IC20	*B2		
IC23	*A1		
IC24	*A2		
IC28	*B2		
IC30	A1		
IC32	A2		
IC33	A2		
IC34	B2		
IC35	B2		
IC36	B2		
IC37	*A2		
IC38	*A2		
IC39	*A2		
IC40	*B2		
IC41	*B2		
IC42	A2		
IC101	A1		
IC102	*A1		
IC201	A1		
IC202	*A1		
IC301	B1		
IC302	*B1		

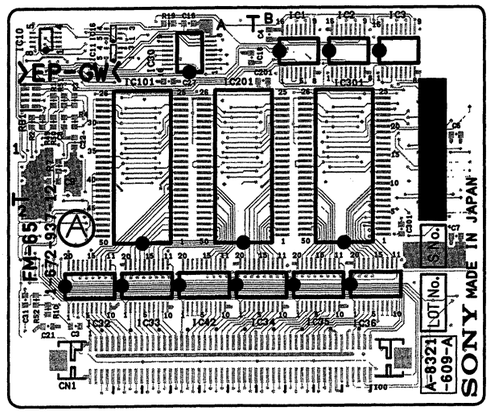

FM-65 -A SIDE-
SUFFIX:-12

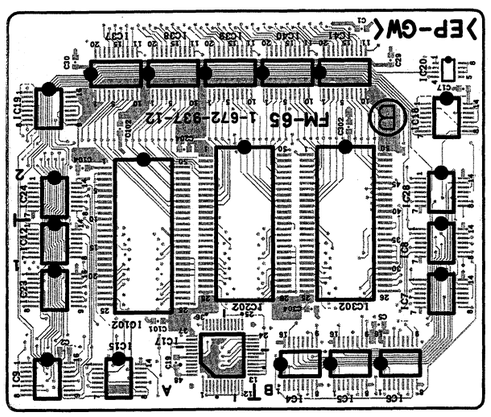

FM-65 -B SIDE-
SUFFIX:-12

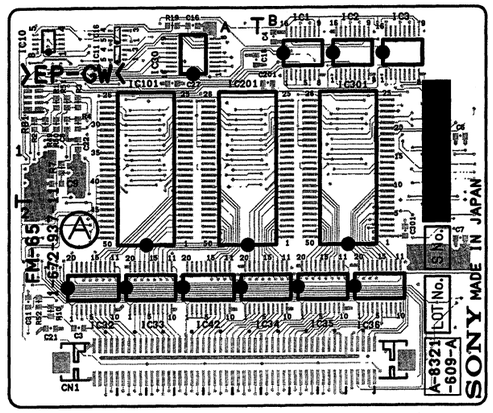

FM-65 -A SIDE-
SUFFIX:-11

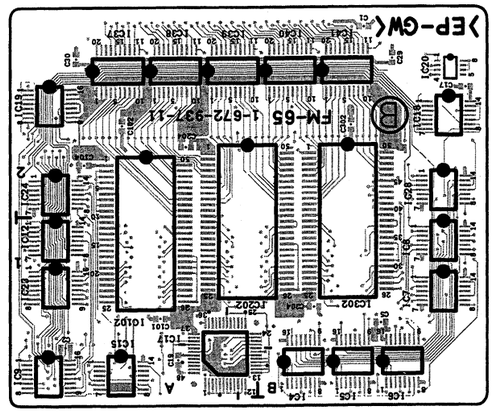

FM-65 -B SIDE-
SUFFIX:-11

FM-65 (1-672-937-11)
---

*:B SIDE

C1	*B2	R1	A1
C2	*A1	R2	A1
C3	A2	R3	A1
C4	B1	R4	A1
C5	*B1	R7	A1
C6	B1	R10	A2
C7	B2	R19	A1
C8	A1	R49	A1
C9	A1	R50	A1
C16	A1	R51	A1
C17	*B2	R52	A2
C18	A1		
C19	*A1	RB1	A1
C21	A2		
C22	A1		
C27	A1		
C29	*B2		
C30	*A2		
C31	A2		
C101	*A1		
C102	*A2		
C104	*A2		
C201	B1		
C204	*A2		
C301	B2		
C302	*B2		
C304	*B1		
CN1	A2		
IC1	B1		
IC2	B1		
IC3	B1		
IC4	*B1		
IC5	*B1		
IC6	*B1		
IC7	*B1		
IC8	*B1		
IC9	*A1		
IC10	A1		
IC11	A1		
IC12	*A1		
IC15	*A1		
IC16	A1		
IC17	*A1		
IC18	*B2		
IC19	*A2		
IC20	*B2		
IC23	*A1		
IC24	*A2		
IC28	*B2		
IC30	A1		
IC32	A2		
IC33	A2		
IC34	B2		
IC35	B2		
IC36	B2		
IC37	*A2		
IC38	*A2		
IC39	*A2		
IC40	*B2		
IC41	*B2		
IC42	A2		
IC101	A1		
IC102	*A1		
IC201	A1		
IC202	*A1		
IC301	B1		
IC302	*B1		

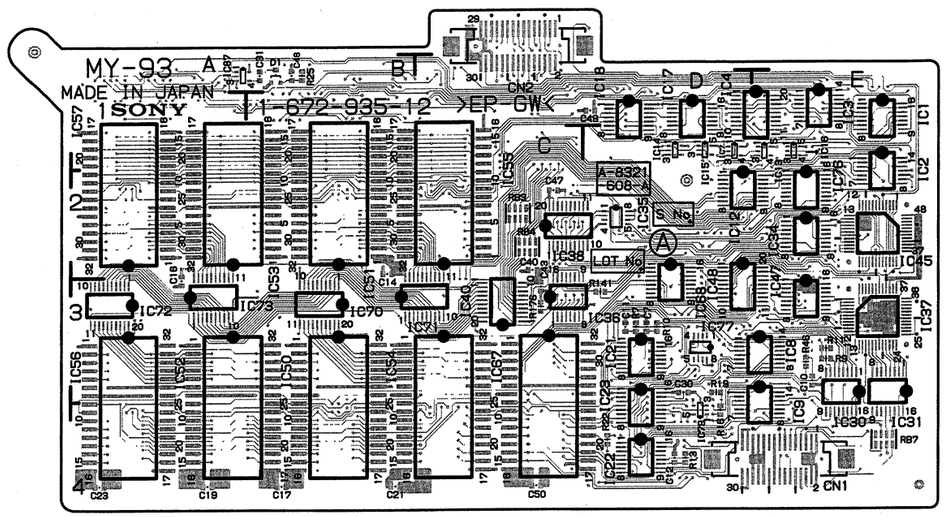

MY-93 -A SIDE-
SUFFIX:-12

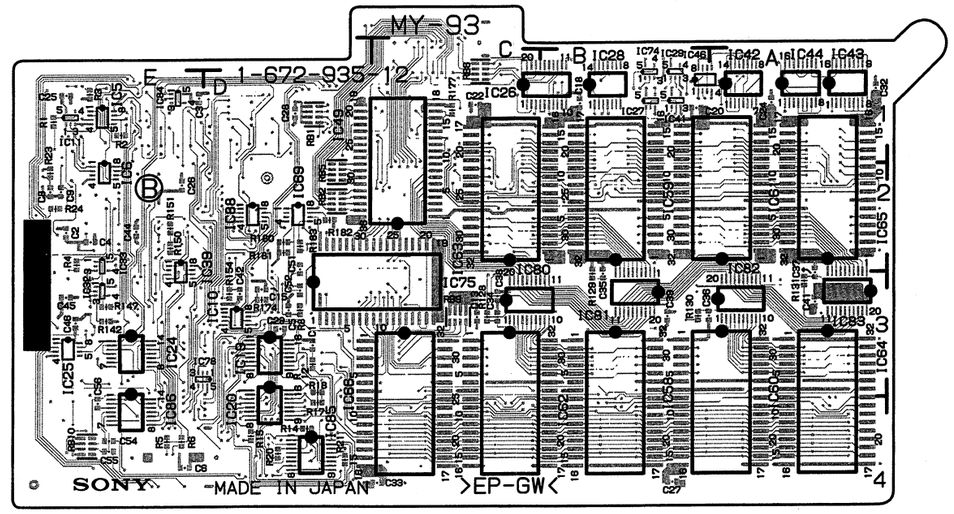

MY-93 -B SIDE-
SUFFIX:-12

MY-93 (1-672-935-12)
---

*:B SIDE

C1	*D3	C43	C3	IC24	*E3	IC66	*D3	R19	D3
C2	*E2	C44	*E2	IC25	*E3	IC67	C3	R20	*D4
C3	*E1	C45	*E3	IC26	*C1	IC68	D2	R21	*D4
C4	*E2	C46	*E3	IC27	*B1	IC69	*D2	R22	D4
C5	*D3	C47	C2	IC28	*B1	IC70	B3	R23	*E2
C6	*E4	C48	B1	IC29	*B1	IC71	B3	R24	*E2
C7	D3	C49	D1	IC30	E3	IC72	A3	R25	B1
C8	*E2	C50	C4	IC31	E3	IC73	A3	R46	E3
C9	*E2	C51	*D2	IC32	*E3	IC74	*B1	R128	*C3
C10	E3	C52	*D3	IC33	*E2	IC75	*D3	R129	*B3
C11	D3	C54	*E4	IC34	E2	IC76	E2	R130	*B3
C12	D4	C55	*E4	IC35	D2	IC77	D3	R131	*A3
C13	*C3	C56	*E4	IC36	C3	IC78	*E3	R141	D3
C14	B2			IC37	E3	IC79	D4	R142	*E3
C15	*D3	CN1	E4	IC38	C2	IC80	*C3	R147	*E3
C16	A3	CN2	C1	IC39	*E2	IC81	*B2	R150	*E2
C17	B4			IC40	C3	IC82	*A3	R151	*E2
C18	*B1	D1	B1	IC41	*B1	IC83	*A2	R154	*D3
C19	A4			IC42	*A1	IC84	*E1	R174	*D3
C20	*B1	IC1	E1	IC43	*A1	IC85	*D4	R176	C3
C21	B4	IC2	E1	IC44	*A1	IC86	*E3	R177	*C1
C22	*C1	IC3	E1	IC45	E2	IC87	A1	R180	*D2
C23	A4	IC4	D1	IC46	*B1	IC88	*D2	R181	*D2
C24	*A1	IC5	*E1	IC47	E3			R182	*D2
C25	*E1	IC6	*E2	IC48	D2	R1	*E1	R183	*D2
C26	*E2	IC7	D1	IC49	*C2	R2	*E1		
C27	*B4	IC8	D3	IC50	B3	R3	*E1	RB1	*D1
C28	*D1	IC9	D3	IC51	B2	R4	*E2	RB2	*D2
C29	*D3	IC10	*D3	IC52	A3	R5	*E4	RB3	C2
C30	D3	IC11	*E1	IC53	B2	R6	*E4	RB4	C2
C31	B1	IC12	D2	IC54	B3	R7	D3	RB5	*D2
C32	*A1	IC13	E1	IC55	C2	R8	*D3	RB6	*C1
C33	*C4	IC14	D1	IC56	A3	R9	E3	RB7	E4
C34	*C3	IC15	D1	IC57	A2	R10	D3	RB9	*C3
C35	*B3	IC16	E1	IC58	*B3	R11	E3	RB10	*E4
C36	*B3	IC17	D1	IC59	*B2	R12	*D3		
C37	*A3	IC18	D1	IC60	*B3	R13	D4		
C38	*C3	IC19	*D3	IC61	*A2	R14	*D4		
C39	*B3	IC20	*D3	IC62	*C3	R15	*D4		
C40	C2	IC21	D3	IC63	*B2	R16	D4		
C41	*A3	IC22	D4	IC64	*A3	R17	*D4		
C42	*D3	IC23	D3	IC65	*A2	R18	*D3		

MY-93

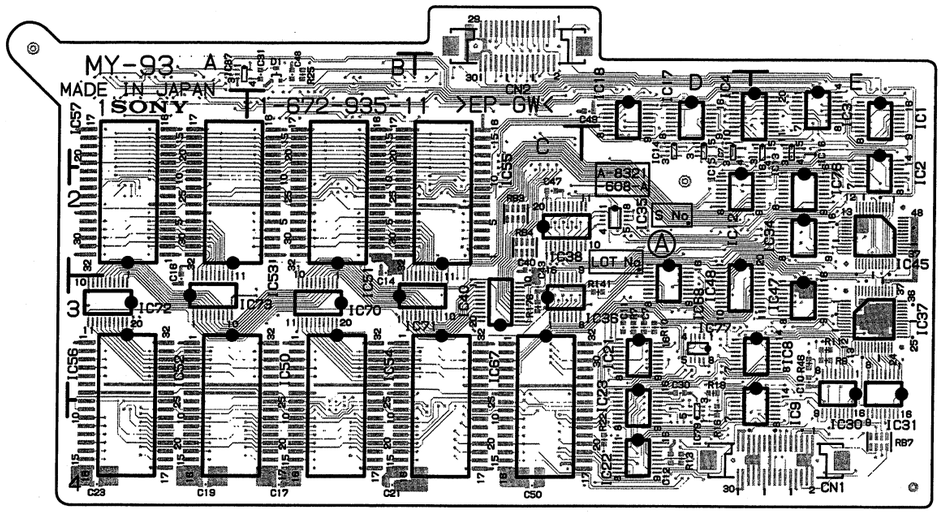

MY-93 -A SIDE-
SUFFIX:-11

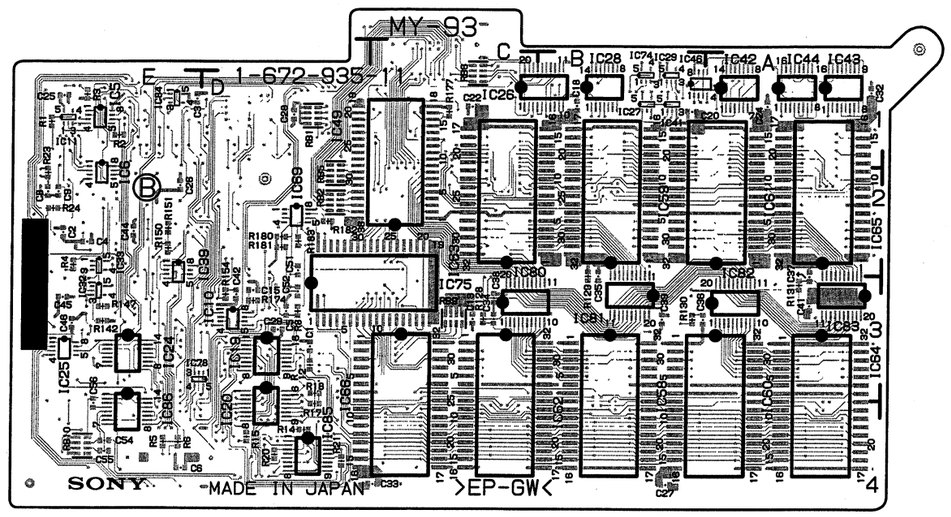

MY-93 -B SIDE-
SUFFIX:-11

MY-93 (1-672-935-11)
---

*:B SIDE

C1	*D3	C43	C3	IC24	*E3	IC66	*D3	R20	*D4
C2	*E2	C44	*E2	IC25	*E3	IC67	C3	R21	*D4
C3	*E1	C45	*E3	IC26	*C1	IC68	D2	R22	D4
C4	*E2	C46	*E3	IC27	*B1	IC69	*D2	R23	*E2
C5	*D3	C47	C2	IC28	*B1	IC70	B3	R24	*E2
C6	*E4	C48	B1	IC29	*B1	IC71	B3	R25	B1
C7	D3	C49	D1	IC30	E3	IC72	A3	R46	E3
C8	*E2	C50	C4	IC31	E3	IC73	A3	R128	*C3
C9	*E2	C51	*D2	IC32	*E3	IC74	*B1	R129	*B3
C10	E3	C52	*D3	IC33	*E2	IC75	*D3	R130	*B3
C11	D3	C54	*E4	IC34	E2	IC76	E2	R131	*A3
C12	D4	C55	*E4	IC35	D2	IC77	D3	R141	D3
C13	*C3	C56	*E4	IC36	C3	IC78	*E3	R142	*E3
C14	B2			IC37	E3	IC79	D4	R147	*E3
C15	*D3	CN1	E4	IC38	C2	IC80	*C3	R150	*E2
C16	A3	CN2	C1	IC39	*E2	IC81	*B2	R151	*E2
C17	B4			IC40	C3	IC82	*A3	R154	*D3
C18	*B1	D1	B1	IC41	*B1	IC83	*A2	R174	*D3
C19	A4			IC42	*A1	IC84	*E1	R176	C3
C20	*B1	IC1	E1	IC43	*A1	IC85	*D4	R177	*C1
C21	B4	IC2	E1	IC44	*A1	IC86	*E3	R180	*D2
C22	*C1	IC3	E1	IC45	E2	IC87	A1	R181	*D2
C23	A4	IC4	D1	IC46	*B1			R182	*D2
C24	*A1	IC5	*E1	IC47	E3	R1	*E1	R183	*D2
C25	*E1	IC6	*E2	IC48	D2	R2	*E1		
C26	*E2	IC7	D1	IC49	*C2	R3	*E1	RB1	*D1
C27	*B4	IC8	D3	IC50	B3	R4	*E2	RB2	*D2
C28	*D1	IC9	D3	IC51	B2	R5	*E4	RB3	C2
C29	*D3	IC10	*D3	IC52	A3	R6	*E4	RB4	C2
C30	D3	IC11	*E1	IC53	B2	R7	D3	RB5	*D2
C31	B1	IC12	D2	IC54	B3	R8	*D3	RB6	*C1
C32	*A1	IC13	E1	IC55	C2	R9	E3	RB7	E4
C33	*C4	IC14	D1	IC56	A3	R10	D3	RB9	*C3
C34	*C3	IC15	D1	IC57	A2	R11	E3	RB10	*E4
C35	*B3	IC16	E1	IC58	*B3	R12	*D3		
C36	*B3	IC17	D1	IC59	*B2	R13	D4		
C37	*A3	IC18	D1	IC60	*B3	R14	*D4		
C38	*C3	IC19	*D3	IC61	*A2	R15	*D4		
C39	*B3	IC20	*D3	IC62	*C3	R16	D4		
C40	C2	IC21	D3	IC63	*B2	R17	*D4		
C41	*A3	IC22	D4	IC64	*A3	R18	*D3		
C42	*D3	IC23	D3	IC65	*A2	R19	D3		

5-39 (a)

このマニュアルに記載されている事柄の著作権は当社にあり，説明内容は機器購入者の使用を目的としています。
従って，当社の許可なしに無断で複写したり，説明内容(操作，保守等)と異なる目的で本マニュアルを使用することを禁止します。

The material contained in this manual consists of information that is the property of Sony Corporation and is intended solely for use by the purchasers of the equipment described in this manual.
Sony Corporation expressly prohibits the duplication of any portion of this manual or the use thereof for any purpose other than the operation or maintenance of the equipment described in this manual without the express written permission of Sony Corporation.

Le matériel contenu dans ce manuel consiste en informations qui sont la propriété de Sony Corporation et sont destinées exclusivement à l'usage des acquéreurs de l'équipement décrit dans ce manuel.
Sony Corporation interdit formellement la copie de quelque partie que ce soit de ce manuel ou son emploi pour tout autre but que des opérations ou entretiens de l'équipement à moins d'une permission écrite de Sony Corporation.

Das in dieser Anleitung enthaltene Material besteht aus Informationen, die Eigentum der Sony Corporation sind, und ausschließlich zum Gebrauch durch den Käufer der in dieser Anleitung beschriebenen Ausrüstung bestimmt sind.
Die Sony Corporation untersagt ausdrücklich die Vervielfältigung jeglicher Teile dieser Anleitung oder den Gebrauch derselben für irgendeinen anderen Zweck als die Bedienung oder Wartung der in dieser Anleitung beschriebenen Ausrüstung ohne ausdrückliche schriftliche Erlaubnis der Sony Corporation.